Docusign Envelope ID: 247A2341-C567-8A84-80C2-B0403FDAE565

CITY OF HOUSTON

HOUSTON PUBLIC WORKS CAPITAL PROJECTS

N.E. SLUDGE TRANSFER, BRAESWOOD N, POST OAK #2, BISSONNET #4, BROOKLET, AND SYNOTT RD. #1 LIFT STATION RENEWAL AND REPLACEMENT

WBS NO. R-000267-0173-4

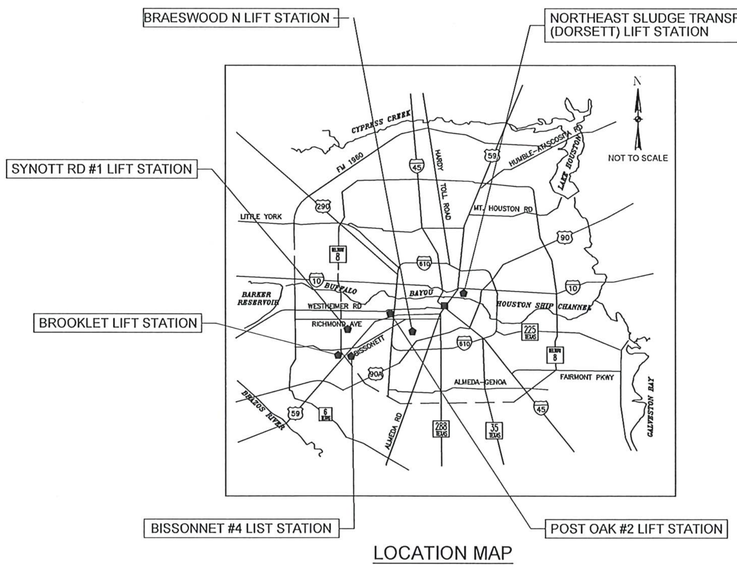

LOCATION MAP

MAYOR
JOHN WHITMIRE

CONTROLLER
CHRIS HOLLINS

DISTRICT COUNCIL MEMBERS

AMY PECK, DISTRICT A
TARSHA JACKSON, DISTRICT B
JOE PANZARELLA, DISTRICT C
CAROLYN EVANS–SHABAZZ, DISTRICT D
FRED FLICKINGER, DISTRICT E
TIFFANY D. THOMAS, DISTRICT F
MARY NAN HUFFMAN, DISTRICT G
MARIO CASTILLO, DISTRICT H
JOAQUIN MARTINEZ, DISTRICT I
EDWARD POLLARD, DISTRICT J
MARTHA CASTEX–TATUM, DISTRICT K

COUNCIL MEMBERS AT–LARGE

JULIAN RAMIREZ, POSITION 1
WILLIE DAVIS, POSITION 2
TWILA CARTER, POSITION 3
ALEJANDRA SALINAS, POSITION 4
SALLIE ALCORN, POSITION 5

TDLR EABPR _____

Z0G01

CODE DESIGN CRITERIA:
2021 IBC WITH CITY OF HOUSTON AMENDMENTS
2021 IECC WITH HOUSTON AMENDMENTS
2021 UMC – UNIFORM MECHANICAL CODE
2023 NEC – NATIONAL ELECTRICAL CODE
2021 IFC – INTERNATIONAL FIRE CODE
2021 IECC OR ASHRAE 90.1 2019

NO.	DATE	REVISION	APP.
3			
2			
1			

HATCH
750 TOWN & COUNTRY BLVD, SUITE 650
HOUSTON, TX 77024
P: 832-930-7670
TX FIRM NUMBER: F-314

STATE OF TEXAS
MARK G. SCALLY
136279
LICENSED PROFESSIONAL ENGINEER
3/31/26

SURVEYED BY: AMANI ENGINEERING, INC.
FB NO. P-6375

DocuSigned by: kelli Ondracek 8D61408B40A249D...
PARKS–FORESTRY DEPT.

METRO

DS
DocuSigned by: Farid Sadeghian 30AD488EC06A406...
HOUSTON WATER

TRANSPORTATION & DRAINAGE OPERATIONS

DS
Signed by: Markos E Mengesha 00A211EA90B54A8...
CAPITAL PROJECTS

DS
DocuSigned by: Jeremy Ellison A7C85C2260C9413...
SURVEY

Initial
DocuSigned by: Johana Clark 808098A38F5E457... 8/14/2026
CITY ENGINEER DATE

Signed by: 1BEBB22072F84DC... 8/14/2026
DIRECTOR OF HOUSTON PUBLIC WORKS DATE

SHEET NO 01 OF 274 SHEETS

FOR CITY OF HOUSTON USE ONLY

HOUSTON PUBLIC WORKS
ACCEPTED AND FILED
82825
CITY DRAWING NUMBER
Approval Date 08/14/26
HOUSTON TX

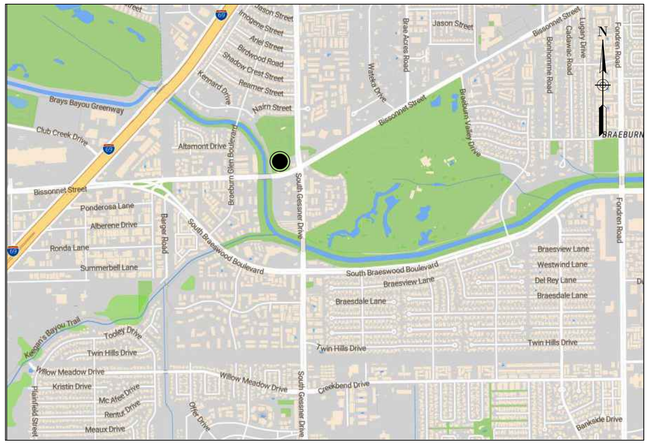
Brays Bayou Greenway
Club Creek Drive
Altamont Drive
Bissonnet Street
Ponderosa Lane
Alberene Drive
Ronda Lane
Summerbell Lane
Bellaire Boulevard
Bellaire Blvd Greenway
Braeswood Glen Boulevard
Barger Road
South Braeswood Boulevard
South Gessner Drive
Hahn Street
Bissonnet Street
Bob Addie Drive
Jason Street
Bellaire Boulevard
Bissonnet Street
Bissonnet Street
Bellaire Blvd Greenway
Walnut Drive

DWG. NO.	SHEET NO.	SHEET TITLE
		GENERAL
Z0G01	1	COVER SHEET
Z0G02	2	VICINITY MAPS
Z0G03	3	SHEET INDEX
Z0G04	4	GENERAL NOTES
Z0G05	5	GENERAL SYMBOLS AND ABBREVIATIONS
Z0G06	6	LIFT STATION SWPPP NOTES AND DETAILS
Z0G07	7	FLOODPLAIN MAPS
		BRAESWOOD N LIFT STATION
E1C01	8	BRAESWOOD N LIFT STATION SURVEY CONTROL MAP
E1C02	9	NOT USED
E1C03	10	BRAESWOOD N LIFT STATION EXISTING CIVIL TOPOGRAPHIC PLAN
E1C04	11	BRAESWOOD N LIFT STATION CIVIL DEMOLITION PLAN
E1C05	12	BRAESWOOD N LIFT STATION PROPOSED CIVIL SITE DEVELOPMENT PLAN
E1C06	13	BRAESWOOD N LIFT STATION CIVIL SWPPP
E1S01	14	BRAESWOOD N LIFT STATION STRUCTURAL DEMOLITION & PROPOSED PLAN
E1S02	15	BRAESWOOD N LIFT STATION STRUCTURAL PLAN & SECTION
E1S03	16	BRAESWOOD N LIFT STATION STRUCTURAL PLATFORM PLAN & SECTION
E1M01	17	BRAESWOOD N LIFT STATION SURFACE PLAN VIEW MECHANICAL DEMOLITION
E1M02	18	BRAESWOOD N LIFT STATION PUMP FLOOR PLAN VIEW MECHANICAL DEMOLITION
E1M03	19	BRAESWOOD N LIFT STATION INTERMEDIATE FLOOR PLAN VIEW MECHANICAL DEMOLITION
E1M04	20	BRAESWOOD N LIFT STATION SECTION VIEW MECHANICAL DEMOLITION
E1M05	21	BRAESWOOD N LIFT STATION MECHANICAL PLAN VIEW
E1M06	22	BRAESWOOD N LIFT STATION MECHANICAL ELEVATION SECTION
E1M07	23	BRAESWOOD N LIFT STATION MECHANICAL TOP VIEW/BASE SECTION
E1M08	24	BRAESWOOD N LIFT STATION DISCHARGE PIPING SUPPORT DETAILS
E1M09	25	BRAESWOOD N LIFT STATION TYPICAL MECHANICAL DETAILS I
E1M10	26	BRAESWOOD N LIFT STATION TYPICAL MECHANICAL DETAILS II
E1E01	27	BRAESWOOD N LIFT STATION ELECTRICAL SITE PLAN
E1E02	28	BRAESWOOD N LIFT STATION LIFT STATION ELEVATION
E1E03	29	BRAESWOOD N LIFT STATION POWER & CONTROL CABINET INSTALLATION
E1E04	30	BRAESWOOD N LIFT STATION POWER & CONTROL CABINET EQUIPMENT LAYOUT AND SCHEDULE
E1E05	31	BRAESWOOD N LIFT STATION POWER & CONTROL CABINET EQUIPMENT LAYOUT–I
E1E06	32	BRAESWOOD N LIFT STATION POWER & CONTROL CABINET EQUIPMENT LAYOUT–II
E1E07	33	BRAESWOOD N LIFT STATION POWER & CONTROL CABINET EQUIPMENT LAYOUT–III
E1E08	34	BRAESWOOD N LIFT STATION INCOMING POWER THREE LINE DIAGRAM
E1E09	35	BRAESWOOD N LIFT STATION SINGLE LINE DIAGRAM
E1E10	36	BRAESWOOD N LIFT STATION COMMUNICATION DIAGRAM
E1E11	37	BRAESWOOD N LIFT STATION PROCESS & INSTRUMENTATION DIAGRAM–I
E1E12	38	BRAESWOOD N LIFT STATION PROCESS & INSTRUMENTATION DIAGRAM–II
E1E13	39	BRAESWOOD N LIFT STATION POWER & CONTROL CABINET CONTROL WIRING DIAGRAM–I
E1E14	40	BRAESWOOD N LIFT STATION POWER & CONTROL CABINET CONTROL WIRING DIAGRAM–II
E1E15	41	BRAESWOOD N LIFT STATION POWER & CONTROL CABINET CONTROL WIRING DIAGRAM–III
E1E16	42	BRAESWOOD N LIFT STATION POWER & CONTROL CABINET CONTROL WIRING DIAGRAM–IV
E1E17	43	BRAESWOOD N LIFT STATION PUMP NO.1 CONTROL WIRING DIAGRAM
E1E18	44	BRAESWOOD N LIFT STATION PUMP NO.2 CONTROL WIRING DIAGRAM
E1E19	45	BRAESWOOD N LIFT STATION PUMP NO.3 CONTROL WIRING DIAGRAM
E1E20	46	BRAESWOOD N LIFT STATION ELECTRICAL CONDUIT SCHEDULE
		POST OAK #2 LIFT STATION
C1C07	47	POST OAK #2 LIFT STATION SURVEY CONTROL MAP
C1C08	48	POST OAK #2 LIFT STATION BOUNDARY SURVEY
C1C09	49	POST OAK #2 LIFT STATION EXISTING CIVIL TOPOGRAPHIC PLAN
C1C10	50	POST OAK #2 LIFT STATION CIVIL DEMOLITION PLAN
C1C11	51	POST OAK #2 LIFT STATION PROPOSED CIVIL SITE DEVELOPMENT PLAN
C1C12	52	SHEET NOT USED
C1C13	53	POST OAK #2 LIFT STATION TRAFFIC CONTROL PLAN
C1C14	54	POST OAK #2 LIFT STATION CIVIL SWPPP
C1S04	55	POST OAK #2 LIFT STATION STRUCTURAL DEMOLITION & PROPOSED PLAN
C1S05	56	POST OAK #2 LIFT STATION PROPOSED STRUCTURAL SECTIONS & DETAILS
C1M11	57	POST OAK #2 LIFT STATION EXISTING MECHANICAL PLAN & SECTION
C1M12	58	POST OAK #2 LIFT STATION SURFACE PLAN VIEW MECHANICAL DEMOLITION
C1M13	59	POST OAK #2 LIFT STATION SECTION VIEW MECHANICAL DEMOLITION
C1M14	60	POST OAK #2 LIFT STATION PROPOSED MECHANICAL PLAN VIEW & GRADE
C1M15	61	SHEET NOT USED
C1M16	62	POST OAK #2 LIFT STATION PROPOSED MECHANICAL ELEVATION SECTION
C1M17	63	POST OAK #2 LIFT STATION PROPOSED DISCHARGE PIPING SUPPORT DETAILS
C1M18	64	POST OAK #2 LIFT STATION TYPICAL MECHANICAL DETAILS
C1M19	65	POST OAK #2 LIFT STATION MECHANICAL SUPPORT DETAILS
C1E21	66	POST OAK #2 LIFT STATION ELECTRICAL SITE PLAN
C1E22	67	POST OAK #2 LIFT STATION LIFT STATION ELEVATION
C1E23	68	POST OAK #2 LIFT STATION POWER & CONTROL CABINET INSTALLATION
C1E24	69	POST OAK #2 LIFT STATION POWER & CONTROL CABINET EQUIPMENT LAYOUT & SCHEDULE
C1E25	70	POST OAK #2 LIFT STATION POWER & CONTROL CABINET EQUIPMENT LAYOUT–I
C1E26	71	POST OAK #2 LIFT STATION POWER & CONTROL CABINET EQUIPMENT LAYOUT–II
C1E27	72	POST OAK #2 LIFT STATION POWER & CONTROL CABINET EQUIPMENT LAYOUT–III
C1E28	73	POST OAK #2 LIFT STATION THREE LINE DIAGRAM
C1E29	74	POST OAK #2 LIFT STATION SINGLE LINE DIAGRAM
C1E30	75	POST OAK #2 LIFT STATION COMMUNICATION DIAGRAM
C1E31	76	POST OAK #2 LIFT STATION PROCESS & INSTRUMENTATION DIAGRAM–I
C1E32	77	POST OAK #2 LIFT STATION PROCESS & INSTRUMENTATION DIAGRAM–II
C1E33	78	POST OAK #2 LIFT STATION POWER & CONTROL CABINET CONTROL WIRING DIAGRAM–I
C1E34	79	POST OAK #2 LIFT STATION POWER & CONTROL CABINET CONTROL WIRING DIAGRAM–II
C1E35	80	POST OAK #2 LIFT STATION POWER & CONTROL CABINET CONTROL WIRING DIAGRAM–III
C1E36	81	POST OAK #2 LIFT STATION POWER & CONTROL CABINET CONTROL WIRING DIAGRAM–IV
C1E37	82	POST OAK #2 LIFT STATION PUMP NO.1 CONTROL WIRING DIAGRAM
C1E38	83	POST OAK #2 LIFT STATION PUMP NO.2 CONTROL WIRING DIAGRAM
C1E39	84	POST OAK #2 LIFT STATION CONDUIT SCHEDULE
		BISSONNET #4 LIFT STATION
N1C15	85	BISSONNET #4 LIFT STATION SURVEY CONTROL MAP
N1C16	86	BISSONNET #4 LIFT STATION BOUNDARY SURVEY
N1C17	87	BISSONNET #4 LIFT STATION EXISTING CIVIL TOPOGRAPHIC PLAN
N1C18	88	BISSONNET #4 LIFT STATION CIVIL DEMOLITION PLAN
N1C19	89	BISSONNET #4 LIFT STATION PROPOSED CIVIL SITE DEVELOPMENT PLAN
N1C20	90	BISSONNET #4 LIFT STATION TRAFFIC CONTROL PLAN
N1C21	91	BISSONNET #4 LIFT STATION CIVIL SWPPP
N1S06	92	BISSONNET #4 LIFT STATION STRUCTURAL DEMOLITION & PROPOSED PLAN
N1S07	93	BISSONNET #4 LIFT STATION PROPOSED STRUCTURAL PLAN & DETAILS
N1S08	94	BISSONNET #4 LIFT STATION PROPOSED STRUCTURAL SECTIONS
N1S09	95	BISSONNET #4 LIFT STATION PROPOSED BIO–FILTER PLATFORM FOUNDATION PLAN & DETAILS
N1S10	96	BISSONNET #4 LIFT STATION PROPOSED BIO–FILTER PLATFORM STEEL PLAN, SECTION & DETAILS
N1S10A	96A	BISSONNET #4 LIFT STATION PROPOSED BIO–FILTER FOUNDATION PLAN & DETAILS
N1S11	97	BISSONNET #4 LIFT STATION PROPOSED ELECTRICAL BUILDING ARCH PLAN & ELEVATIONS
N1S11A	97A	BISSONNET #4 LIFT STATION PROPOSED ELECTRICAL BUILDING ARCH SECTIONS & DETAILS
N1S12	98	BISSONNET #4 LIFT STATION PROPOSED ELECT. STRUCTURAL PLAN, SECTIONS AND DETAILS
N1M20	99	BISSONNET #4 LIFT STATION SURFACE PLAN VIEW MECHANICAL DEMOLITION PLAN
N1M21	100	BISSONNET #4 LIFT STATION SECTION PLAN VIEW MECHANICAL DEMOLITION PLAN
N1M22	101	BISSONNET #4 LIFT STATION SECTION VIEW MECHANICAL DEMOLITION PLAN
N1M23	102	BISSONNET #4 LIFT STATION PROP. MECHANICAL PLAN VIEW
N1M24	103	BISSONNET #4 LIFT STATION PROP. MECHANICAL ELEVATION SECTION A–A
N1M25	104	BISSONNET #4 LIFT STATION MECHANICAL SURGE VALVE DETAIL
N1M26	105	BISSONNET #4 LIFT STATION PROP. MECHANICAL TOP VIEW/BASE SECTION
N1M27	106	BISSONNET #4 LIFT STATION PROP. MECHANICAL DISCHARGE PIPING SUPPORT DETAILS
N1M28	107	BISSONNET #4 LIFT STATION TYPICAL MECHANICAL DETAILS
N1M29	108	BISSONNET #4 LIFT STATION PUMP CURVE
N1M30	109	BISSONNET #4 LIFT STATION MECHANICAL DETAILS II
N1M31	110	BISSONNET #4 LIFT STATION ODOR CONTROL PLAN VIEW
N1M32	111	BISSONNET #4 LIFT STATION ODOR CONTROL SECTION VIEW
N1A01	112	BISSONNET #4 LIFT STATION ARCHITECTURAL CONTROL BUILDING
N1E40	113	BISSONNET #4 LIFT STATION ELECTRICAL SITE PLAN
N1E41	114	BISSONNET #4 LIFT STATION LIFT STATION ELEVATION
N1E42	115	BISSONNET #4 LIFT STATION CONTROL BUILDING – I
N1E42A	115A	BISSONNET #4 LIFT STATION CONTROL BUILDING – II
N1E43	116	BISSONNET #4 LIFT STATION CONTROL CABINET EQUIPMENT LAYOUT AND SCHEDULE
N1E44	117	BISSONNET #4 LIFT STATION CONTROL CABINET EQUIPMENT LAYOUT
N1E45	118	BISSONNET #4 LIFT STATION INCOMING POWER THREE LINE DIAGRAM
N1E46	119	BISSONNET #4 LIFT STATION MCC SCHEMATIC AND WIRING DIAGRAM
N1E47	120	BISSONNET #4 LIFT STATION SINGLE LINE DIAGRAM
N1E48	121	BISSONNET #4 LIFT STATION COMMUNICATION DIAGRAM
N1E49	122	BISSONNET #4 LIFT STATION PROCESS & INSTRUMENTATION DIAGRAM–I
N1E50	123	BISSONNET #4 LIFT STATION PROCESS & INSTRUMENTATION DIAGRAM–II
N1E51	124	BISSONNET #4 LIFT STATION CONTROL CABINET CONTROL WIRING DIAGRAM–I
N1E52	125	BISSONNET #4 LIFT STATION CONTROL CABINET CONTROL WIRING DIAGRAM–II
N1E53	126	BISSONNET #4 LIFT STATION CONTROL CABINET CONTROL WIRING DIAGRAM–III
N1E54	127	BISSONNET #4 LIFT STATION PUMP NO.1 CONTROL WIRING DIAGRAM
N1E55	128	BISSONNET #4 LIFT STATION PUMP NO.2 CONTROL WIRING DIAGRAM
N1E56	129	BISSONNET #4 LIFT STATION PUMP NO.3 CONTROL WIRING DIAGRAM
N1E57	130	BISSONNET #4 LIFT STATION PUMP NO.4 CONTROL WIRING DIAGRAM
N1E58	131	BISSONNET #4 LIFT STATION PUMP NO.5 CONTROL WIRING DIAGRAM
N1E59	132	BISSONNET #4 LIFT STATION PUMP NO.6 CONTROL WIRING DIAGRAM
N1E60	133	BISSONNET #4 LIFT STATION MCC ELEVATION
N1E61	134	BISSONNET #4 LIFT STATION ELECTRICAL CONDUIT SCHEDULE
		BROOKLET LIFT STATION
C1C22	135	BROOKLET LIFT STATION SURVEY CONTROL MAP
C1C23	136	BROOKLET LIFT STATION BOUNDARY SURVEY
C1C24	137	BROOKLET LIFT STATION EXISTING CIVIL TOPOGRAPHICAL PLAN
C1C25	138	BROOKLET LIFT STATION CIVIL DEMOLITION PLAN
C1C26	139	BROOKLET LIFT STATION PROPOSED CIVIL SITE DEVELOPMENT PLAN
C1C27	140	BROOKLET LIFT STATION TRAFFIC CONTROL PLAN
C1C28	141	BROOKLET LIFT STATION CIVIL SWPPP
C1S13	142	BROOKLET LIFT STATION PROP. STRUCTURAL DEMOLITION & PROPOSED PLAN
C1S14	143	BROOKLET LIFT STATION PROP. STRUCTURAL PLAN, SECTIONS & DETAILS
C1S15	144	BROOKLET LIFT STATION PROP. STRUCTURAL ELEV. ELEC, CAB, PLATFORM PLAN & SECTIONS
C1M33	145	BROOKLET LIFT STATION SURFACE & SECTIONAL PLAN VIEWS MECHANICAL DEMOLITION
C1M34	146	BROOKLET LIFT STATION SECTION VIEWS MECHANICAL DEMOLITION
C1M35	147	BROOKLET LIFT STATION PROP. MECHANICAL PLAN VIEW GRADE/BASE SECTION
C1M36	148	BROOKLET LIFT STATION PROP. MECHANICAL ELEVATION SECTION VIEW I
C1M37	149	BROOKLET LIFT STATION PROP. MECHANICAL ELEVATION SECTION VIEW II
C1M38	150	BROOKLET LIFT STATION MECHANICAL DISCHARGE PIPING SUPPORT DETAILS
C1M39	151	BROOKLET LIFT STATION TYPICAL MECHANICAL DETAILS I
C1M40	152	BROOKLET LIFT STATION TYPICAL MECHANICAL DETAILS II
C1E62	153	BROOKLET LIFT STATION ELECTRICAL SITE PLAN
C1E63	154	BROOKLET LIFT STATION LIFT STATION ELEVATION
C1E64	155	BROOKLET LIFT STATION POWER & CONTROL CABINET INSTALLATION
C1E65	156	BROOKLET LIFT STATION POWER & CONTROL CABINET EQUIPMENT LAYOUT AND SCHEDULE
C1E66	157	BROOKLET LIFT STATION POWER & CONTROL CONTROL CABINET EQUIPMENT LAYOUT–II
C1E67	158	BROOKLET LIFT STATION INCOMING POWER THREE LINE DIAGRAM
C1E68	159	BROOKLET LIFT STATION SINGLE LINE DIAGRAM
C1E69	160	BROOKLET LIFT STATION COMMUNICATION DIAGRAM
C1E70	161	BROOKLET LIFT STATION PROCESS & INSTRUMENTATION DIAGRAM–I
C1E71	162	BROOKLET LIFT STATION PROCESS & INSTRUMENTATION DIAGRAM–II
C1E72	163	BROOKLET LIFT STATION POWER & CONTROL CABINET CONTROL WIRING DIAGRAM–I
C1E73	164	BROOKLET LIFT STATION POWER & CONTROL CABINET CONTROL WIRING DIAGRAM–II
C1E74	165	BROOKLET LIFT STATION POWER & CONTROL CABINET CONTROL WIRING DIAGRAM–III
C1E75	166	BROOKLET LIFT STATION PUMP NO.1 CONTROL WIRING DIAGRAM
C1E76	167	BROOKLET LIFT STATION PUMP NO.2 CONTROL WIRING DIAGRAM
C1E77	168	BROOKLET LIFT STATION CONDUIT SCHEDULE
		NE SLUDGE TRANSFER LIFT STATION
F1C29	169	N.E. SLUDGE TRANSFER LIFT STATION SURVEY CONTROL MAP
F1C30	170	N.E. SLUDGE TRANSFER LIFT STATION BOUNDARY SURVEY
F1C31	171	N.E. SLUDGE TRANSFER LIFT STATION CIVIL TOPOGRAPHICAL PLAN
F1C32	172	N.E. SLUDGE TRANSFER LIFT STATION CIVIL DEMOLITION PLAN
F1C33	173	N.E. SLUDGE TRANSFER LIFT STATION PROPOSED CIVIL SITE DEVELOPMENT PLAN
F1C34	174	N.E. SLUDGE TRANSFER LIFT STATION CIVIL SWPPP
F1S16	175	N.E. SLUDGE TRANSFER LIFT STATION PROP. STRUCTURAL DEMOLITION & PROPOSED PLAN
F1S17	176	N.E. SLUDGE TRANSFER LIFT STATION PROP. STRUCTURAL PLAN, SECTIONS & DETAILS
F1M41	177	N.E. SLUDGE TRANSFER LIFT STATION SURFACE PLAN VIEW MECHANICAL DEMOLITION
F1M42	178	N.E. SLUDGE TRANSFER LIFT STATION SECTIONAL PLAN VIEW MECHANICAL DEMOLITION
F1M43	179	N.E. SLUDGE TRANSFER LIFT STATION SECTION VIEW MECHANICAL DEMOLITION I
F1M44	180	N.E. SLUDGE TRANSFER LIFT STATION SECTION VIEW MECHANICAL DEMOLITION II
F1M45	181	N.E. SLUDGE TRANSFER LIFT STATION PROP. MECHANICAL PLAN VIEW
F1M46	182	N.E. SLUDGE TRANSFER LIFT STATION PROP. MECHANICAL ELEVATION SECTION
F1M47	183	N.E. SLUDGE TRANSFER LIFT STATION PROP. MECHANICAL ELEVATION SECTION C–C
F1M48	184	N.E. SLUDGE TRANSFER LIFT STATION PROP. MECHANICAL TOP VIEW/BASE SECTION
F1M49	185	N.E. SLUDGE TRANSFER LIFT STATION MECHANICAL DISCHARGE PIPING SUPPORT DETAILS
F1M50	186	N.E. SLUDGE TRANSFER LIFT STATION TYPICAL MECHANICAL DETAILS I
F1M51	187	N.E. SLUDGE TRANSFER LIFT STATION TYPICAL MECHANICAL DETAILS II
F1E78	188	N.E. SLUDGE TRANSFER LIFT STATION ELECTRICAL SITE PLAN
F1E79	189	N.E. SLUDGE TRANSFER LIFT STATION LIFT STATION ELEVATION
F1E80	190	N.E. SLUDGE TRANSFER LIFT STATION CONTROL BUILDING – ELECTRICAL
F1E81	191	N.E. SLUDGE TRANSFER LIFT STATION CONTROL CABINET EQUIPMENT LAYOUT AND SCHEDULE
F1E82	192	N.E. SLUDGE TRANSFER LIFT STATION CONTROL CABINET EQUIPMENT LAYOUT
F1E83	193	SHEET NOT USED
F1E84	194	N.E. SLUDGE TRANSFER LIFT STATION MCC SCHEMATIC AND WIRING DIAGRAM
F1E85	195	N.E. SLUDGE TRANSFER LIFT STATION MCC SCHEMATIC AND WIRING DIAGRAM SUMERSIBLE MIXER
F1E86	196	N.E. SLUDGE TRANSFER LIFT STATION SINGLE LINE DIAGRAM
F1E87	197	N.E. SLUDGE TRANSFER LIFT STATION COMMUNICATION DIAGRAM
F1E88	198	N.E. SLUDGE TRANSFER LIFT STATION PROCESS & INSTRUMENTATION DIAGRAM–I
F1E89	199	N.E. SLUDGE TRANSFER LIFT STATION PROCESS & INSTRUMENTATION DIAGRAM–II
F1E90	200	N.E. SLUDGE TRANSFER LIFT STATION CONTROL CABINET CONTROL WIRING DIAGRAM–I
F1E91	201	N.E. SLUDGE TRANSFER LIFT STATION CONTROL CABINET CONTROL WIRING DIAGRAM–II
F1E92	202	N.E. SLUDGE TRANSFER LIFT STATION CONTROL CABINET CONTROL WIRING DIAGRAM–III
F1E93	203	N.E. SLUDGE TRANSFER LIFT STATION CONTROL CABINET CONTROL WIRING DIAGRAM–IV
F1E94	204	N.E. SLUDGE TRANSFER LIFT STATION PUMP NO.1 CONTROL WIRING DIAGRAM
F1E95	205	N.E. SLUDGE TRANSFER LIFT STATION PUMP NO.2 CONTROL WIRING DIAGRAM
F1E96	206	N.E. SLUDGE TRANSFER LIFT STATION PUMP NO.3 CONTROL WIRING DIAGRAM
F1E97	207	N.E. SLUDGE TRANSFER LIFT STATION MCC – POWER & CONTROL CABINET ELEVATION
F1E98	208	N.E. SLUDGE TRANSFER LIFT STATION ELECTRICAL CONDUIT SCHEDULE
		SYNOTT RD. #1 LIFT STATION
F1C35	209	SYNOTT RD #1 LIFT STATION SURVEY CONTROL MAP
F1C36	210	SYNOTT RD #1 LIFT STATION BOUNDARY SURVEY
F1C37	211	SYNOTT RD #1 LIFT STATION CIVIL TOPOGRAPHICAL PLAN
F1C38	212	SYNOTT RD #1 LIFT STATION CIVIL DEMOLITION PLAN
F1C39	213	SYNOTT RD #1 LIFT STATION PROPOSED CIVIL SITE DEVELOPMENT PLAN
F1C40	214	SYNOTT RD #1 LIFT STATION TRAFFIC CONTROL PLAN
F1C41	215	SYNOTT RD #1 LIFT STATION CIVIL SWPPP
F1S18	216	SYNOTT RD #1 LIFT STATION PROP. STRUCTURAL DEMOLITION & PROPOSED PLAN
F1S19	217	SYNOTT RD #1 LIFT STATION PROP. STRUCTURAL PLAN, SECTIONS & DETAILS
F1S20	218	SYNOTT RD #1 LIFT STATION PROP. STRUCTURAL ELEVA. ELECT. CAB. PLAT. PLAN & SECTIONS
F1M52	219	SYNOTT RD #1 LIFT STATION SURFACE PLAN VIEW MECHANICAL DEMOLITION
F1M53	220	SYNOTT RD #1 LIFT STATON SECTION VIEW MECHANICAL DEMOLITION
F1M54	221	SYNOTT RD #1 LIFT STATION PROP. MECHANICAL PLAN VIEW/GRADE
F1M55	222	SYNOTT RD #1 LIFT STATION PROP. MECHANICAL TOP VIEW/BASE SECTION
F1M56	223	SYNOTT RD #1 LIFT STATION PROP. MECHANICAL ELEVATION SECTION A–A
F1M57	224	SYNOTT RD #1 LIFT STATION TYPICAL MECHANICAL DETAILS I
F1M58	225	SYNOTT RD #1 LIFT STATION TYPICAL MECHANICAL DETAILS II
F1M59	226	SYNOTT RD #1 LIFT STATION PUMP CURVE
F1M60	226A	SYNOTT RD #1 LIFT STATION TYPICAL MECHANICAL DETAILS III
F1E99	227	SYNOTT RD. #1 LIFT STATION ELECTRICAL SITE PLAN
F1E100	228	SYNOTT RD. #1 LIFT STATION LIFT STATION ELEVATION
F1E101	229	SYNOTT RD. #1 LIFT STATION POWER & CONTROL CABINET INSTALLATION
F1E102	230	SYNOTT RD. #1 LIFT STATION POWER & CONTROL CABINET EQUIPMENT LAYOUT AND SCHEDULE
F1E103	231	SYNOTT RD. #1 LIFT STATION POWER & CONTROL CABINET EQUIPMENT LAYOUT–I
F1E104	232	SYNOTT RD. #1 LIFT STATION POWER & CONTROL CABINET EQUIPMENT LAYOUT–II
F1E105	233	SYNOTT RD. #1 LIFT STATION POWER & CONTROL CABINET EQUIPMENT LAYOUT–III
F1E106	234	SYNOTT RD. #1 LIFT STATION INCOMING POWER THREE LINE DIAGRAM
F1E107	235	SYNOTT RD. #1 LIFT STATION SINGLE LINE DIAGRAM
F1E108	236	SYNOTT RD. #1 LIFT STATION COMMUNICATION DIAGRAM
F1E109	237	SYNOTT RD. #1 LIFT STATION PROCESS & INSTRUMENTATION DIAGRAM–I
F1E110	238	SYNOTT RD. #1 LIFT STATION PROCESS & INSTRUMENTATION DIAGRAM–II
F1E111	239	SYNOTT RD. #1 LIFT STATION POWER & CONTROL CABINET CONTROL WIRING DIAGRAM–I
F1E112	240	SYNOTT RD. #1 LIFT STATION POWER & CONTROL CABINET CONTROL WIRING DIAGRAM–II
F1E113	241	SYNOTT RD. #1 LIFT STATION POWER & CONTROL CABINET CONTROL WIRING DIAGRAM–III
F1E114	242	SYNOTT RD. #1 LIFT STATION POWER & CONTROL CABINET CONTROL WIRING DIAGRAM–IV
F1E115	243	SYNOTT RD. #1 LIFT STATION PUMP NO.1 CONTROL WIRING DIAGRAM
F1E116	244	SYNOTT RD. #1 LIFT STATION PUMP NO.2 CONTROL WIRING DIAGRAM
F1E117	245	SYNOTT RD. #1 LIFT STATION PUMP NO.3 CONTROL WIRING DIAGRAM
F1E118	246	SYNOTT RD. #1 LIFT STATION ELECTRICAL CONDUIT SCHEDULE
		DETAILS
Z0C42	247	TYPICAL SITE DETAILS I
Z0C43	248	DRIVEWAY DETAIL
Z0C44	249	CONSTRUCTION SIGN BUILD HOUSTON FORWARD
Z0C45	250	TCP NOTES CHANNELING DEVICES AND BARRICADES
Z0C45A	250A	TCP ONE LANE CLOSURE PHASE I&II
Z0C45B	250B	TCP TYPICAL DETAIL ROUTING WITH ONE LANE CLOSURE (ONE BLOCK)
Z0C45C	250C	TXDOT TRAFFIC CONTROL DETAIL
Z0C46	251	SHEET NOT USED
Z0C47	252	TYPICAL SITE DETAILS II
Z0C48	253	TYPICAL SITE DETAILS III
Z0C49	254	TYPICAL MANHOLE DETAILS
Z0C49A	254A	TYPICAL PAVING DETAIL
Z0C49B	254B	TYPICAL MANHOLE DETAILS II
Z0S21	255	STRUCTURAL NOTES
Z0S22	256	STRUCTURAL STANDARD DETAILS (SHEET 1 OF 2)
Z0S23	257	STRUCTURAL STANDARD DETAILS (SHEET 2 OF 2)
Z0S24	258	ELEVATED ELECTRICAL CABINET PLATFORM (SHEET 1 OF 3)
Z0S25	259	ELEVATED ELECTRICAL CABINET PLATFORM (SHEET 2 OF 3)
Z0S26	260	ELEVATED ELECTRICAL CABINET PLATFORM STAIRCASE (SHEET 3 OF 3)
Z0E120	261	ELECTRICAL LEGENDS & SYMBOLS–I
Z0E121	262	ELECTRICAL LEGENDS & SYMBOLS–II
Z0E122	263	INSTRUMENTATION LEGENDS & SYMBOLS–I
Z0E123	264	INSTRUMENTATION LEGENDS & SYMBOLS–II
Z0E124	265	BROOKLET LS & POST OAK #2 LS TYPICAL JUNCTION BOX DETAILS
Z0E125	266	TYPICAL ELECTRICAL DETAILS
Z0E126	267	ELECTRICAL YARD LIGHT/COMM. POLE DETAILS
Z0E127	268	ELECTRICAL SERVICE RACK DETAILS
Z0E128	269	ELECTRICAL SERVICE DETAILS
Z0E129	270	RADAR LEVEL TRANSMITTER GAUGING SYSTEM DETAILS INSTALLATION & DETAILS–I
Z0E130	271	PROPOSED FLUME DETAILS
Z0E131	272	ELECTRICAL GENERAL NOTES
Z0C150	273	GENERAL CONSTRUCTION NOTES
Z0E133	274	SHEET NO USED

NO.	DATE	REVISION	APP.

HATCH
750 TOWN & COUNTRY BLVD
SUITE 650
HOUSTON, TX 77024
P: 832-930-7670
TX FIRM NUMBER: F-314

SURVEYED BY:
AMANI ENGINEERING, INC.
FB NO. P-6357

STATE OF TEXAS
MARK G. SCALLY
136279
LICENSED
PROFESSIONAL ENGINEER
7/24/26

CITY OF HOUSTON
HOUSTON PUBLIC WORKS

LIFT STATION RENEWAL & REPLACEMENT PROJECT

SHEET INDEX

WBS NUMBER	R-000267-0173-4
DRAWING SCALE	N.T.S.
CITY OF HOUSTON PM	N.K. NUPUR KRISHNAN, P.E.
Z0G03	SHEET NO. 3 OF 246

FOR CITY OF HOUSTON USE ONLY

HOUSTON PUBLIC WORKS
ACCEPTED AND FILED
82825
CITY DRAWING NUMBER
Approval Date 08/14/26
HOUSTON TX

PLOTTED: 8/12/2026 5:49 AM

PLOT STYLE: COH.ctb

FILE PATH: \\wusppplot01\d$\Global ProjectWise Plotting - WUS\Queue 1\queue1.dwg

PLOTTED: 7/22/2026 1:17 PM
PLOT STYLE: COH.ctb
FILE PATH: \\wuspplpl01\d$\Global ProjectWise Plotting - WUS\Queue 3\queue3.dwg

PRIVATE UTILITY NOTES:

AT&T TEXAS/ SWBT FACILITIES:

1. THE LOCATIONS OF AT&T TEXAS/SWBT FACILITIES ARE SHOWN IN AN APPROXIMATE WAY ONLY. THE CONTRACTOR SHALL DETERMINE THE EXACT LOCATION BEFORE COMMENCING WORK. HE AGREES TO BE FULLY RESPONSIBLE FOR ANY AND ALL DAMAGES WHICH MIGHT BE OCCASIONED BY THIS FAILURE TO EXACTLY LOCATE AND PRESERVE THESE UNDERGROUND UTILITIES.
2. THE CONTRACTOR SHALL CALL 1-800-344-8377 (TEXAS 811) A MINIMUM OF 48 HOURS PRIOR TO CONSTRUCTION TO HAVE UNDERGROUND LINES FIELD LOCATED.
3. WHEN EXCAVATING WITHIN EIGHTEEN INCHES (18") OF THE INDICATED LOCATION OF AT&T TEXAS/SWBT FACILITIES, ALL EXCAVATIONS MUST BE ACCOMPLISHED USING NON-MECHANIZED EXCAVATION PROCEDURES. WHEN BORING, THE CONTRACTOR SHALL EXPOSE THE AT&T TEXAS/SWBT FACILITIES.
4. WHEN AT&T TEXAS/SWBT FACILITIES ARE EXPOSED, THE CONTRACTOR WILL PROVIDE SUPPORT TO PREVENT DAMAGE TO THE CONDUIT DUCTS OR CABLES. WHEN EXCAVATING NEAR TELEPHONE POLES THE CONTRACTOR SHALL BRACE THE POLE FOR SUPPORT.
5. THE PRESENCE OR ABSENCE OF AT&T TEXAS/SWBT UNDERGROUND CONDUIT FACILITIES OR BURIED CABLE FACILITIES SHOWN ON THESE PLANS DOES NOT MEAN THAT THERE ARE NO DIRECT BURIED CABLES OR OTHER CABLES IN CONDUIT IN THE AREA.
6. PLEASE CONTACT THE AT&T TEXAS DAMAGE PREVENTION MANAGER KEVIN RAY AT (713) 614-1983 OR EMAIL HIM AT KR7896@ATT.COM. IF THERE ARE QUESTIONS ABOUT BORING OR EXCAVATING NEAR OUR AT&T TEXAS/SWBT FACILITIES.

CENTERPOINT ENERGY NOTES:

CAUTION: UNDERGROUND GAS FACILITIES

1. THE CONTRACTOR SHALL CONTACT THE UTILITY COORDINATING COMMITTEE AT 1-800-545-6005 OR 811 A MINIMUM OF 48 HOURS PRIOR TO CONSTRUCTION TO HAVE MAIN AND SERVICE LINES FIELD LOCATED.
   - -WHEN CENTERPOINT ENERGY PIPE LINE MARKINGS ARE NOT VISIBLE, CALL (713) 207-5463 OR 713-945-8037 (7:00 AM TO 4:30 PM) FOR STATUS OF LINE LOCATION REQUEST BEFORE EXCAVATION BEGINS.
   - -WHEN EXCAVATING WITHIN EIGHTEEN INCHES (18") OF THE INDICATED LOCATION OF CENTERPOINT ENERGY FACILITIES, ALL EXCAVATION MUST BE ACCOMPLISHED USING NON-MECHANIZED EXCAVATION PROCEDURES.
   - -WHEN CENTERPOINT ENERGY FACILITIES ARE EXPOSED, SUFFICIENT SUPPORT MUST BE PROVIDED TO THE FACILITIES TO PREVENT EXCESSIVE STRESS ON THE PIPING.
   - -FOR EMERGENCIES REGARDING GAS LINES CALL (713) 659-2111 OR 713-207-4200
2. THE CONTRACTOR IS FULLY RESPONSIBLE FOR ANY DAMAGES CAUSED BY HIS FAILURE TO EXACTLY LOCATE AND PRESERVE THESE UNDERGROUND FACILITIES.

WARNING: OVERHEAD ELECTRICAL LINES:

1. OVERHEAD LINES MAY EXIST ON THE PROPERTY. THE LOCATION OF OVERHEAD LINES HAS NOT BEEN SHOWN ON THESE DRAWINGS AS THE LINES ARE CLEARLY VISIBLE, BUT YOU SHOULD LOCATE THEM PRIOR TO BEGINNING ANY CONSTRUCTION. TEXAS LAW, SECTION 752, HEALTH & SAFETY CODE FORBIDS ACTIVITIES THAT OCCUR IN CLOSE PROXIMITY TO HIGH VOLTAGE LINES, SPECIFICALLY:
   - -ANY ACTIVITY WHERE PERSONS OR THINGS MAY COME WITHIN TEN(10) FEET OF LIVE OVERHEAD HIGH VOLTAGE LINES; AND
   - -OPERATING A CRANE, DERRICK, POWER SHOVEL, DRILLING RIG, PILE DRIVER, HOISTING EQUIPMENT, OR SIMILAR APPARATUS WITHIN 10 FEET OF LIVE OVERHEAD HIGH VOLTAGE LINES.
2. PARTIES RESPONSIBLE FOR THE WORK, INCLUDING CONTRACTORS, ARE LEGALLY RESPONSIBLE FOR THE SAFETY OF CONSTRUCTION WORKERS UNDER THIS LAW. THIS LAW CARRIES BOTH CRIMINAL AND CIVIL LIABILITY. TO ARRANGE FOR LINES TO BE TURNED OFF OR REMOVED CALL CENTERPOINT ENERGY AT 713-207-2222.

ACTIVITIES ON/OR ACROSS CENTERPOINT ENERGY FEE OR EASEMENT PROPERTY

1. NO APPROVAL TO USE, CROSS, OR OCCUPY NO CENTERPOINT FEE OR EASEMENT PROPERTY IS GIVEN. IF YOU NEED TO USE CENTERPOINT PROPERTY, PLEASE CONTACT OUR SURVEYING AND RIGHT OF WAY DIVISION AT (713) 207-6348 OR (713) 207-5769

WARNING: UNDERGROUND ELEC TRIC AL UTILITIES:

THE CONTRACTOR SHALL CONTACT THE UTILITY COORDINATING COMMITTEE AT 1-800-545-6005 OR 811 A MINIMUM OF 48 HOURS PRIOR TO CONSTRUCTION TO HAVE MAIN AND SERVICE LINES FIELD LOCATED.

- ALL INFORMATION CONCERNING TYPE AND LOCATION OF UNDERGROUND UTILITIES IS NOT GUARANTEED TO BE ACCURATE OR ALL INCLUSIVE. THE CONTRACTORS ARE RESPONSIBLE MAKING THEIR OWN DETERMINATIONS AS TO TYPE AND LOCATION OF UNDERGROUND UTILITIES AS MAY BE NECESSARY TO AVOID DAMAGE THERETO. THE CONTRACTOR SHALL VERIFY LOCATION OF UNDERGROUND PIPELINES, CONDUITS, AND STRUCTURES BY CONTACTING OWNERS OF UNDERGROUND UTILITIES OR BY EXCAVATING IN ADVANCE OF CONSTRUCTION.
- THE CONTRACTOR IS RESPONSIBLE FOR DETERMINING THE EXACT LOCATION OF ALL UTILITIES WHEN AND WHERE THEY FALL IN THE PATH OF CONSTRUCTION.
- THE CONTRACTOR IS ALSO RESPONSIBLE FOR CONTACTING THE UTILITY COORDINATING COMMITTEE AT (713) 223-4567 AND TEXAS ONE CALL AT 1-800-245-4545, FORTY-EIGHT (48) HOURS PRIOR TO ANY CONSTRUCTION.
- THE LOCATION OF ANY CENTERPOINT ENERGY UTILITIES ARE SHOWN IN APPROXIMATE WAY ONLY. THE CONTRACTOR SHALL DETERMINE THE EXACT LOCATION BEFORE COMMENCING WORK. THEY AGREE TO BE FULLY RESPONSIBLE FOR ANY AND ALL DAMAGES WHICH MIGHT BE OCCASIONED BY THIS FAILURE TO EXACTLY LOCATE AND PRESERVE THESE UNDERGROUND UTILITIES.
- ALL PROPOSED FACILITIES SHALL MAINTAIN 12" CLEAR FROM ALL EXISTING UTILITIES.

STANDARD NOTES FOR CONSTRUCTION DRAWINGS (HCFCD):

1. OBTAIN AND COMPLY WITH ALL APPLICABLE CITY, COUNTY, STATE, AND FEDERAL PERMITS AND APPROVALS, WITH ASSISTANCE FROM ENGINEER, IF NECESSARY. OBTAIN PERMIT (CERTIFICATION) FROM HARRIS COUNTY ENGINEER TO ENTER HARRIS COUNTY FLOOD CONTROL DISTRICT RIGHT-OF-WAY.
2. NOTIFY THE HARRIS COUNTY FLOOD CONTROL DISTRICT'S PROPERTY MANAGEMENT DEPARTMENT IN WRITING AT LEAST 48 HOURS PRIOR TO CONSTRUCTION. SUBMIT THE HCFCD 48 HOUR PRE-CONSTRUCTION NOTIFICATION FORM, A COPY OF THE APPROVED CONSTRUCTION DRAWINGS, AND A COPY OF THE CORPS OF ENGINEERS INDIVIDUAL SECTION 404 PERMIT, IF APPLICABLE, TO HCFCD, 9900 NORTHWEST FREEWAY, HOUSTON, TEXAS 77092, ATTN: PROPERTY MANAGEMENT DEPT. BY HAND DELIVERY, OR FAX TO 713-684-4129 (FAX NUMBER).
3. ENGINEER SHALL SUBMIT CERTIFICATION LETTER AND RECORD DRAWINGS TO THE HARRIS COUNTY FLOOD CONTROL DISTRICT'S PROPERTY MANAGEMENT DEPARTMENT REQUESTING INSPECTION OF ITEMS CONSTRUCTED IN HARRIS COUNTY FLOOD CONTROL DISTRICT RIGHT-OF-WAY. PRIOR TO REQUESTING INSPECTION, THE DRAINAGE RIGHT-OF-WAY AND/OR EASEMENTS SHALL BE STAKED AND FLAGGED.
4. PROTECT, MAINTAIN, AND RESTORE EXISTING BACKSLOPE DRAINAGE SYSTEMS.
5. BACKSLOPE SWALE AND INTERCEPTOR STRUCTURE ELEVATIONS AND LOCATIONS SHOWN ON PLANS ARE APPROXIMATE. FINAL ELEVATIONS AND LOCATIONS SHALL BE FIELD VERIFIED BY THE ENGINEER PRIOR TO INSTALLATION.
6. ESTABLISH TURF GRASS ON ALL DISTURBED AREAS WITHIN THE CHANNEL OR DETENTION RIGHT-OF-WAY, EXCEPT THE CHANNEL BOTTOM AND WHERE STRUCTURAL EROSION MEASURES ARE USED. MINIMUM ACCEPTANCE CRITERIA ARE 75% COVERAGE OF LIVE BERMUDA GRASS AND NO EROSION OR RILLS DEEPER THAN 4".
7. BACKFILL IN ACCORDANCE WITH THE HARRIS COUNTY FLOOD CONTROL DISTRICT STANDARD SPECIFICATION, SECTION 02315 – EXCAVATING AND BACKFILLING, OR EQUIVALENT.
8. EXCAVATE CHANNEL FLOWLINE TO DESIGN ELEVATION AS SHOWN ON PLANS AND DOWNSTREAM, AS NECESSARY, TO ENSURE NO WATER REMAINS IN THE FACILITY (STORM SEWER, LATERAL CHANNEL, OR DRY BOTTOM DETENTION BASIN) DURING NORMAL WATER SURFACE CONDITIONS IN THE CHANNEL, SO THE FACILITY WILL FUNCTION AS INTENDED. FOR WET BOTTOM DETENTION BASINS, ENSURE NO WATER IS ABOVE THE DESIGN LEVEL IN THE WET BOTTOM DURING NORMAL WATER SURFACE CONDITIONS IN THE CHANNEL.
9. MAINTAIN FLOW IN CHANNEL DURING CONSTRUCTION AND RESTORE CHANNEL TO ORIGINAL CONDITION.
10. REMOVE ALL EXCAVATED MATERIAL FROM THE HARRIS COUNTY FLOOD CONTROL DISTRICT OR DRAINAGE RIGHT-OF-WAY. NO FILL IS TO BE PLACED WITHIN A DESIGNATED FLOOD PLAIN AREA WITHOUT FIRST OBTAINING A FILL PERMIT FROM THE APPROPRIATE JURISDICTIONAL AUTHORITY.

GENERAL NOTES – METRO:

1. CONTRACTOR SHALL NOTIFY METRO AT 713-615-6195 TWO WEEKS PRIOR TO DISTURBING EXISTING BUS STOPS.
1. CONTRACTOR SHALL COORDINATE WITH METRO TO REMOVE EXISTING AMENITIES.
2. BUS STOPS SHALL CONSTRUCTED PER CITY OF HOUSTON INFRASTRUCTURE DESIGN MANUAL AND MEET CURRENT ADA REQUIREMENTS

TRAFFIC NOTES:

CONTRACTOR OR OWNER SHALL SUBMIT TRAFFIC CONTROL PLANS WITH THE MOBILITY PERMIT APPLICATION. THE PLANS SHALL BE DRAWN TO SCALE AND SEALED BY A LICENSED PROFESSIONAL ENGINEER IN THE STATE OF TEXAS.

THE GENERAL NOTES THAT SHALL BE INCLUDED ON THE TRAFFIC CONTROL PLAN CAN BE FOUND IN CHAPTER 15 (15.12 TRAFFIC CONTROL PLAN) OF THE CITY OF HOUSTON'S (CITY) INFRASTRUCTURE DESIGN MANUAL (IDM). BELOW ARE SEVERAL KEY NOTES FROM THE IDM TO BE AWARE OF:

1. THE CONTRACTOR SHALL PROVIDE AND INSTALL TRAFFIC CONTROL DEVICES IN CONFORMANCE WITH PART VI OF THE TEXAS MANUAL ON UNIFORM TRAFFIC CONTROL DEVICES (TMUTCD) LATEST EDITION WITH REVISIONS DURING THE ENTIRE CONSTRUCTION PERIOD.
2. NO WORK SHALL BE PERFORMED IN RESIDENTIAL AREAS FROM 7:00PM TO 7:00AM.
3. CONTRACTOR SHALL MAINTAIN APPROVED NUMBER OF LANES OF TRAFFIC IN EACH DIRECTION DURING CONSTRUCTION WORKING HOURS. TRAFFIC CONTROL PLANS SHALL INCLUDE ONE-WAY AND/OR DETOUR PLANS. CONTRACTOR SHALL MAINTAIN ADA COMPLAINT PEDESTRIAN ACCESS TO BUS STOPS AND ADEQUATE BUS ACCESS TO THE BUS STOP.
4. CONTRACTOR SHALL COVER OPEN PAVEMENT EXCAVATIONS FOR MINOR UTILITY WORK WITH ANCHORED STEEL PLATES DURING NON-WORKING HOURS, OPEN LANES FOR NORMAL TRAFFIC FLOW WHEN FEASIBLE.
5. CONTRACTOR SHALL SECURE ROADWAY/SIDEWALK/STREET/BICYCLE FACILITY PERMITS AS DESCRIBED IN CITY OF HOUSTON ORDINANCE, CHAPTER 40 – STREETS & SIDEWALKS, SECTION 40-361 FROM HOUSTON PERMITTING CENTER (MOBILITY PERMIT SECTION AT HTTPS://GEOHUB.HOUSTONTX.GOV) BEFORE IMPLEMENTING THE TRAFFIC CONTROL PLAN. THE APPLICATION MUST BE SUBMITTED AT LEAST TEN BUSINESS DAYS PRIOR TO THE IMPLEMENTATION OF THE TRAFFIC CONTROL PLAN AND/OR BEGINNING CONSTRUCTION WORK. THE CONTRACTOR SHALL PROVIDE TRAFFIC CONTROL PLANS, CONSTRUCTION SEQUENCING, AND CONSTRUCTION SCHEDULE WITH THE APPLICATION.
6. CONTRACTOR SHALL HAVE APPROVED TRAFFIC CONTROL PLAN AND PERMIT AT THE JOB SITE FOR INSPECTION AT ALL TIMES
7. ACCESS TO DRIVEWAYS ADJACENT TO THE CONSTRUCTION WORK ZONE SHALL BE MAINTAINED AT ALL TIMES AS MUCH AS POSSIBLE. ADDITIONAL CONES AND/OR DELINEATORS MAY BE REQUIRED TO DELINEATE THE DRIVEWAY ACCESS ROUTE THROUGH THE CONSTRUCTION WORK ZONE. A MINIMUM OF ONE TRAVEL LANE SHALL BE MAINTAINED ACROSS THE DRIVEWAY, UNLESS PRIOR WRITTEN APPROVAL IS OBTAINED FROM THE CITY OF HOUSTON.
8. ADDITIONAL OFF DUTY POLICE OFFICERS/FLAGGERS MAY BE REQUESTED TO DIRECT TRAFFIC WHEN LANES ARE BLOCKED AT THE DIRECTION OF THE CITY EVEN IF THEY ARE NOT SPECIFICALLY IDENTIFIED ON THE PROJECT PLANS.

STREET & BRIDGE CONSTRUCTION NOTES:

1. FILL AREAS ON PLANS SHALL BE FILLED IN LAYERS NOT EXCEEDING 8" IN DEPTH AND EACH COMPACTED TO NOT LESS THAN 95% STANDARD PROCTOR DENSITY PRIOR TO INSTALLATION OF WATER LINE AND FILL AREA SHALL BE SEEDED AND FERTILIZED WITHIN 10 WORKING DAYS.
2. UTILITY CONTRACTOR SHALL PROVIDE TEMPORARY SILT BARRIER FENCE ON ALL NON-CURBED INLETS WHICH WILL REMAIN IN PLACE AFTER UNDERGROUND CONTRACT IS COMPLETE.
3. CONTRACTOR SHALL PROVIDE SILT BARRIER FENCE ON ALL STAGE 1 CURB INLETS.
4. EXISTING PAVEMENTS, CURBS, DRIVEWAYS, AND SIDEWALKS DAMAGED OR REMOVED DURING CONSTRUCTION SHALL BE REPLACED TO CITY OF HOUSTON STANDARDS, WITH LATEST ADDENDA AND AMENDMENTS THERETO.
5. CONDITION OF THE ROAD AND/OR RIGHT-OF-WAY UPON COMPLETION OF JOB SHALL BE AS GOOD AS OR BETTER THAN PRIOR TO STARTING WORK.
6. EXPOSED 15" OF REINFORCING STEEL AT PROPOSED SAWED JOINT IF NO REINFORCING STEEL EXISTS, USE HORIZONTAL DOWELS. HORIZONTAL DOWELS SHALL BE #6 BARS 24" LONG 24" C-C DRILLED AND EMBEDDED 8" INTO THE CENTER OF THE EXISTING SLAB WITH "PO ROC" OR EQUAL.
7. WHEELCHAIR RAMPS SHALL BE INSTALLED IN ACCORDANCE WITH CITY OF HOUSTON STANDARDS AT ALL INTERSECTIONS WHERE SIDEWALKS EXIST AND THE EXISTING CURB OR SIDEWALK IS DAMAGED OR REMOVED DURING CONSTRUCTION.
8. PRIOR TO STREET CONSTRUCTION, THE CONTRACTOR SHALL CONTACT HOUSTON PUBLIC WORKS AT (PHONE) 832-394-9578 AND COMPLY WITH ALL REQUIREMENTS FOR THE ISSUANCE OF NECESSARY PERMITS/WORK ORDERS FOR STREET CONSTRUCTION.
9. DOUBLE REFLECTORIZED BLUE TRAFFIC MARKERS SHALL BE PLACED 6-INCHES OFFSET OF THE CENTERLINE OF ALL FIRE HYDRANT LOCATIONS BY THE PAVING CONTRACTOR. HYDRANTS LOCATED AT INTERSECTIONS SHALL HAVE A BUTTON PLACED ON EACH STREET.

CITY OF HOUSTON INSIDE CITY LIMITS NOTES:

1. UNLESS OTHERWISE NOTED AND APPROVED ON DRAWINGS, CONSTRUCT CIVIL INFRASTRUCTURE IN ACCORDANCE WITH THE EFFECTIVE EDITION OF THE HOUSTON PUBLIC WORKS STANDARD CONSTRUCTION SPECIFICATION, STANDARD CONSTRUCTION DETAILS, AND SUPPLEMENTS, ADDENDA AND AMENDMENTS THERETO.
2. THE DESIGN MUST BE CONSISTENT WITH THE EFFECTIVE EDITION OF THE HOUSTON PUBLIC WORKS INFRASTRUCTURE DESIGN MANUAL AND TCEQ (TEXAS COMMISSION ON ENVIRONMENTAL QUALITY) REQUIREMENTS.
3. UTILITIES PRESENTED ON THESE DRAWINGS ARE SHOWN BASED ON THE BEST AVAILABLE INFORMATION. CONTRACTOR SHALL VERIFY THE EXACT LOCATIONS IN THE FIELD PRIOR TO COMMENCING CONSTRUCTION. CONTRACTOR SHALL NOTIFY TEXAS ONE CALL AT 713-223-5467/811 OR 800-344-8377 AND LONE STAR NOTIFICATION CENTER AT 800-669-8344 AT LEAST 48 HOURS BEFORE PROCEEDING WITH ANY EXCAVATION. UTILITIES MARKED WITHIN THE PUBLIC RIGHT OF WAY OR IN EASEMENTS SHALL COMPLY WITH TAC TITLE 16, PART 1, CHAPTER 18, RULE 18.6 AND THE AMERICAN PUBLIC WORKS ADMINISTRATION (APWA) UNIFORM CODE.
4. CONTRACTOR SHALL BE RESPONSIBLE FOR DAMAGES TO EXISTING WATER, WASTEWATER, STORM WATER LINES AND TRAFFIC CONTROL DEVICES. DAMAGES SHALL BE REPAIRED IN ACCORDANCE WITH THE EFFECTIVE EDITION OF HOUSTON PUBLIC WORKS, STANDARD CONSTRUCTION SPECIFICATIONS FOR WASTEWATER COLLECTION SYSTEM, WATER LINES, STORM DRAINAGE, STREET PAVING, AND TRAFFIC AND STANDARD CONSTRUCTION DETAILS FOR WASTEWATER COLLECTION SYSTEMS, WATER LINES, STORM DRAINAGE, STREET PAVING AND TRAFFIC REFERENCED ABOVE AND SUPPLEMENTS, ADDENDA AND AMENDMENTS THERETO, AT NO ADDITIONAL COST FOR THE CITY OF HOUSTON.
5. CONTRACTOR SHALL NOTIFY THE OFFICE OF THE CITY ENGINEER, HOUSTON PUBLIC WORKS @ 832-394-9098 OR VIA FAX AT 832-395-4424 FOR INSPECTION AT LEAST 48 HOURS PRIOR TO COMMENCING CONSTRUCTION.
6. ADEQUATE DRAINAGE SHALL BE MAINTAINED AT ALL TIMES DURING CONSTRUCTION AND ANY DRAINAGE DITCH OR STRUCTURE DISTURBED DURING CONSTRUCTION SHALL BE RESTORED TO EXISTING CONDITIONS OR BETTER AND TO SATISFACTION OF THE OWNING AUTHORITY.
7. WHEELCHAIR RAMPS SHALL BE INSTALLED IN ACCORDANCE WITH CITY OF HOUSTON STANDARDS AT ALL INTERSECTIONS WHERE SIDEWALKS EXIST AND THE EXISTING CURB OR SIDEWALK IS DAMAGED OR REMOVED DURING CONSTRUCTION.
8. CONTRACTOR SHALL TAKE NECESSARY PRECAUTIONS TO PROTECT ROOT SYSTEMS OF SHRUBS, PLANTS AND TREES ALONG THE AREA OF EXCAVATION.
9. CONTRACTOR SHALL COMPLY WITH LATEST EDITION OF OSHA REGULATIONS AND THE STATE OF TEXAS LAWS CONCERNING EXCAVATION.
10. CONTRACTOR SHALL MAINTAIN A SET OF REDLINE DRAWINGS AND RECORD AS-BUILT CONDITIONS DURING CONSTRUCTION. THESE AS-BUILT DRAWINGS WILL BE SUBMITTED TO THE DESIGN CONSULTANT WHO WILL MAKE THE CHANGES ON THE ORIGINAL TRACINGS, LABEL EACH SHEET IN THE SET AS "RECORD DRAWINGS", AND RETURN IT TO THE OFFICE OF THE CITY ENGINEER.

CITY OF HOUSTON SWPPP CONSTRUCTION NOTES:

1. CONTRACTOR SHALL IMPLEMENT INLET PROTECTION DEVICES AND REINFORCED FILTER FABRIC BARRIER ALONG ROAD AND SIDE DITCHES AT LOCATIONS SHOWN ON THE TYPICAL STORM WATER POLLUTION PREVENTION (SWPP) PLANS TO KEEP SILT AND OR EXCAVATED MATERIALS FROM ENTERING INTO THE STORM WATER INLETS AND DITCHES EVENTUALLY POLLUTING THE RECEIVING STORM.
2. DURING THE EXCAVATION PHASE OF THE PROJECT, CONTRACTOR SHALL SCHEDULE THE WORK IN SHORT SEGMENTS SO THAT THE EXCAVATION MATERIAL CAN BE QUICKLY HAULED AWAY FROM TH SITE AND TO PREVENT IT FROM STAYING UNCOLLECTED ON THE EXISTING PAVEMENT. ANY LOOSE EXCAVATED MATERIAL WHICH FALLS ON PAVEMENTS OR DRIVEWAYS SHALL BE SWEPT BACK INTO THE EXCAVATED AREA.
3. CONTRACTOR SHALL CLEAN UP THE EXISTING STREET INTERSECTIONS AND DRIVEWAYS DAILY, AS NECESSARY, TO REMOVE ANY EXCESS MUD, SILT OR ROCK TRACKED FROM THE EXCAVATION AREA
4. CONTRACTOR SHALL FOLLOW GOOD HOUSEKEEPING PRACTICES DURING THE CONSTRUCTION OF THE PROJECT, ALWAYS CLEANING UP DIRT AND LOOSE MATERIAL AS CONSTRUCTION PROGRESSES.
5. CONTRACTOR TO INSPECT AND MAINTAIN THE AREAS LISTED BELOW AT LEAST ONCE EVERY FOURTEEN (14) CALENDAR DAYS AND WITHIN 24 HOURS OF THE END OF A STORM EVENT OF 0.5 INCHES OR GREATER
   - DISTURBED AREAS OF THE CONSTRUCTION SITE THAT HAVE NOT BEEN FINALLY STABILIZED.
   - AREAS USED FOR STORAGE OF MATERIALS THAT ARE EXPOSED TO PRECIPITATION.
   - STRUCTURAL CONTROL MEASURES.
   - LOCATIONS WHERE VEHICLES ENTER OR EXIT THE SITE.
6. CONTRACTOR TO BE RESPONSIBLE TO MAINTAIN EXISTING DITCHES AND OR CULVERTS FOR UNOBSTRUCTED DRAINAGE AT ALL TIMES. WHERE SODDING IS DISTURBED BY EXCAVATION ON BACKFILLING OPERATIONS, SUCH AREAS SHALL BE REPLACED BY SEEDING OR SODDING. SLOPES 4:1 OR STEPPER SHALL BE REPLACED BY BLOCK SODDING.
7. CONTRACTOR SHALL REMOVE/REPLACE INLET PROTECTION BARRIER(S) BEFORE AND/OR AFTER SEVERE WEATHER EVENT PER REQUEST OF THE CITY OF HOUSTON.

PERMIT NOTES

1. THE 2023 NATIONAL ELECTRIC CODE (N.E.C.) WAS ADOPTED BY THE STATE OF TEXAS AND BECAME EFFECTIVE SEPTEMBER 1, 2023.
2. EFFECTIVE JANUARY 1ST, 2024 ALL REFERENCE AND ENFORCEMENT TO THE IECC INTERNATIONAL ENERGY CONSERVATION CODE WILL BE BASED ON THE 2021 IECC OR 2019 ASHRAE 90.1 (2019), PURSUANT TO SECTION 19.53 OF CHAPTER 34, TEXAS ADMINISTRATIVE CODE.
3. ALL ELECTRICAL EQUIPMENT AND OTHER SERVICE FACILITIES SHALL BE PLACED AT OR ABOVE THE 500-YEAR ELEVATION + 3' IN COMPLIANCE WITH CHAPTER 19 OF THE HOUSTON CODE OF ORDINANCES.
4. CODE DESIGN CRITERIA:

2021 IBC WITH CITY OF HOUSTON AMENDMENTS
2021 IECC WITH HOUSTON AMENDMENTS
2021 UMC – UNIFORM MECHANICAL CODE
2023 NEC – NATIONAL ELECTRICAL CODE
2021 IFC – INTERNATIONAL FIRE CODE
2021 IECC OR ASHRAE 90.1 2019

NO.	DATE	REVISION	APP.

NOTICE:
FOR YOUR SAFETY, YOU ARE REQUIRED BY TEXAS LAW TO CALL 811 AT LEAST 48 HOURS BEFORE YOU DIG SO THAT UNDERGROUND LINES CAN BE MARKED. THIS SIGNATURE DOES NOT FULFILL YOUR OBLIGATION TO CALL 811

VERIFICATION OF PRIVATE UTILITY LINES

Mike Brower 07/31/26
Date

CenterPoint Energy natural gas utilities shown. (Gas service lines are not shown). This signature not be used for conflict verification.

Signature valid for six months.

Mike Brower 07/31/26
Date

CenterPoint Energy/UNDERGROUND Electrical Facilities Verification ONLY. (This signature verifies existing underground facilities – not to be used for conflict verification)

Signature valid for six months.

Marc F Johnson 7/28/26
Date

Approved for AT&T underground conduit facilities only.
Signature valid for one year.

HATCH
750 TOWN & COUNTRY BLVD
SUITE 650
HOUSTON, TX 77024
P: 832-930-7670
TX FIRM NUMBER: F-314

SURVEYED BY:
AMANI ENGINEERING, INC.
FB NO. P-6357

STATE OF TEXAS
MARK G. SCALLY
136279
LICENSED
PROFESSIONAL ENGINEER
7/28/26

CITY OF HOUSTON
HOUSTON PUBLIC WORKS

LIFT STATION RENEWAL & REPLACEMENT PROJECT

GENERAL NOTES

WBS NUMBER	R-000267-0173-4
DRAWING SCALE	N.T.S.
CITY OF HOUSTON PM	N.K. NUPUR KRISHNAN, P.E.
ZDG04	SHEET NO. 04 OF 274

FOR CITY OF HOUSTON USE ONLY

HOUSTON PUBLIC WORKS
ACCEPTED AND FILED
82825
CITY DRAWING NUMBER
Approval Date 08/14/26
HOUSTON TX

EXISTING PLAN VIEW

- WATER METER
- WATER VALVE (GATE)
- WATER VALVE (BUTTERFLY)
- FIRE HYDRANT/FLUSHING VALVE
- TAPPING SLEEVE & VALVE
- REDUCER
- ROUND CONNECTION
- SANITARY SEWER CLEANOUT & MANHOLE
- STORM SEWER MANHOLE
- STORM SEWER INLETS
- CULVERT PIPE AND HEADWALL
- TOP OF CURB ELEVATION
- GUTTER ELEVATION
- TOP OF PAVEMENT ELEVATION
- CONTOUR LINE
- ROW LINE
- PROPERTY LINE
- LOT LINES
- EASEMENT LINE
- CENTER LINE OF ROW
- TRANSIT LINE
- EDGE OF DITCHES
- CENTER LINE OF DITCHES
- EDGE OF DITCHES
- FENCE LINE, WOOD
- FENCE LINE, CHAIN LINK
- FENCE LINE, BARBED WIRE
- FENCE LINE, HOG WIRE
- EDGE OF CONCRETE
- CURB LINE
- CONCRETE WALK
- EDGE OF ASPHALT
- EDGE OF SHELL OR GRAVEL
- DIMENSION LINE
- AERIAL POWER LINE
- UNDERGROUND POWER LINE
- GAS LINE
- UNKNOWN UNDERGROUND LINE
- OIL PIPELINE
- UNDERGROUND TELECOMM LINE W/VAULT
- AERIAL TELECOMM LINE
- RAILROAD LINE
- WATER LINE
- SANITARY SEWER LINE
- STORM SEWER LINE
- SANITARY SEWER FORCE MAIN
- RECLAIMED WATER LINE
- NON–POTABLE WATER LINE
- GAS METER
- GAS VALVE
- PROPANE LINE
- STEAM LINE
- MISC UNDERGROUND PIPELINE LABLE

PROPOSED PLAN VIEW

- WATER METER
- WATER VALVE (GATE)
- WATER VALVE (BUTTERFLY)
- FIRE HYDRANT/FLUSHING VALVE
- TAPPING SLEEVE & VALVE
- REDUCER
- ROUND CONNECTION
- SANITARY SEWER CLEANOUT & MANHOLE
- STORM SEWER MANHOLE
- STORM SEWER INLETS
- CULVERT PIPE AND HEADWALL
- TOP OF CURB ELEVATION
- GUTTER ELEVATION
- TOP OF PAVEMENT ELEVATION
- CONTOUR LINE
- ROW LINE
- PROPERTY LINE
- LOT LINES
- EASEMENT LINE
- CENTER LINE OF ROW
- TRANSIT LINE
- EDGE OF DITCHES
- CENTER LINE OF DITCHES
- EDGE OF DITCHES
- FENCE LINE, WOOD
- FENCE LINE, CHAIN LINK
- FENCE LINE, BARBED WIRE
- FENCE LINE, HOG WIRE
- EDGE OF CONCRETE
- CURB LINE
- CONCRETE WALK
- EDGE OF ASPHALT
- EDGE OF SHELL OR GRAVEL
- DIMENSION LINE
- AERIAL POWER LINE
- UNDERGROUND POWER LINE
- GAS LINE
- UNKNOWN UNDERGROUND LINE
- OIL PIPELINE
- UNDERGROUND TELECOMM LINE W/ VAULT
- AERIAL TELECOMM LINE
- RAILROAD LINE
- WATER LINE
- SANITARY SEWER LINE
- STORM SEWER LINE
- SANITARY SEWER FORCE MAIN
- RECLAIMED WATER LINE
- NON–POTABLE WATER LINE
- GAS METER
- GAS VALVE
- PROPANE LINE
- STEAM LINE
- MISC UNDERGROUND PIPELINE LABLE
- MATCH LINE

EXISTING PLAN VIEW

- PAVING HEADER
- BUILDING, RESIDENTIAL
- BUILDING, COMMERCIAL
- TREE
- HEDGE
- IRON PIPE OR IRON ROD MONUMENT
- POINT OF INTERSECTION (PI)
- POINT OF CURVE (PC)
- POINT OF TANGENCY (PT)
- POWER POLE
- POWER POLE W/DOWN GUY

EXISTING PROFILE VIEW

- NORTH OR EAST PROPERTY LINE
- SOUTH OR WEST PROPERTY LINE
- NORTH OR EAST CURB
- SOUTH OR WEST CURB
- NORTH OR EAST DITCH
- SOUTH OR WEST DITCH
- NORTH OR EAST NATURAL GROUND
- SOUTH OR WEST NATURAL GROUND
- NORTH OR EAST CULVERT
- SOUTH OR WEST CULVERT
- CENTERLINE OF ROW
- CENTERPOINT ENERGY CONDUIT
- GAS LINE
- WESTERN UNION
- AT&T CONDUIT
- WATER LINE
- SANITARY SEWER LINE
- STORM SEWER LINE
- SANITARY SEWER FORCE MAIN
- RECLAIMED WATER LINE
- NON–POTABLE WATER LINE
- CENTERPOINT ENERGY MANHOLE
- AT&T MANHOLE
- WATER LINE MANHOLE
- SANITARY SEWER MANHOLE & CLEANOUT
- STORM SEWER MANHOLE
- STORM SEWER INLET

PROPOSED PLAN VIEW

- PAVING HEADER
- BUILDING, RESIDENTIAL
- BUILDING, COMMERCIAL
- TREE
- HEDGE
- IRON PIPE OR IRON ROD MONUMENT
- POINT OF INTERSECTION (PI)
- POINT OF CURVE (PC)
- POINT OF TANGENCY (PT)
- POWER POLE
- POWER POLE W/DOWN GUY

PROPOSED PROFILE VIEW

- NORTH OR EAST PROPERTY LINE
- SOUTH OR WEST PROPERTY LINE
- NORTH OR EAST CURB
- SOUTH OR WEST CURB
- NORTH OR EAST DITCH
- SOUTH OR WEST DITCH
- NORTH OR EAST NATURAL GROUND
- SOUTH OR WEST NATURAL GROUND
- NORTH OR EAST CULVERT
- SOUTH OR WEST CULVERT
- CENTERLINE OF ROW
- CENTERPOINT ENERGY CONDUIT
- GAS LINE
- WESTERN UNION
- AT&T CONDUIT
- WATER LINE
- SANITARY SEWER LINE
- STORM SEWER LINE
- SANITARY SEWER FORCE MAIN
- RECLAIMED WATER LINE
- NON–POTABLE WATER LINE
- CENTERPOINT ENERGY MANHOLE
- AT&T MANHOLE
- WATER LINE MANHOLE
- SANITARY SEWER MANHOLE & CLEANOUT
- STORM SEWER MANHOLE
- STORM SEWER INLET

MISC STANDARD ELEMENTS

- COH NORTH ARROW
- COH BAR SCALE
- REVISION CLOUD/DELTA
- DETAIL/SECTION TITLE
- SECTION CALLOUT
- DETAIL CALLOUT

HATCH
750 TOWN & COUNTRY BLVD
SUITE 650
HOUSTON, TX 77024
P: 832–930–7670
TX FIRM NUMBER: F– 314

SURVEYED BY:
AMANI ENGINEERING, INC.
FB NUMBER: P–6164

CITY OF HOUSTON
HOUSTON PUBLIC WORKS

LIFT STATION RENEWAL & REPLACEMENT PROJECT

GENERAL SYMBOLS AND ABBREVIATIONS

WBS NUMBER	
R–000267–0173–4	
DRAWING SCALE	
N.T.S.	
CITY OF HOUSTON PM	
NUPUR KRISHNAN, P.E.N.K.	
Z0G05	SHFFT NO 05 OF 274

HOUSTON PUBLIC WORKS
ACCEPTED AND FILED
82825
CITY DRAWING NUMBER
Approval Date 08/14/26
HOUSTON TX

DISCLAIMER:
THE USE OF THIS STANDARD IS GOVERNED BY THE TEXAS ENGINEERING PRACTICE ACT. THE DESIGN REQUIREMENTS ON THIS STANDARD DO NOT PURPORT TO ADDRESS ALL OF THE SAFETY CONCERNS ASSOCIATED WITH THEIR USE. THE ENGINEER OF RECORD (EOR) IS TO REVIEW THESE DESIGN REQUIREMENTS AND BY AUTHORIZING THEIR USE, ACCEPTS RESPONSIBILITY FOR THEIR APPLICABILITY, ADEQUACY AND SAFETY. NO WARRANTY OF ANY KIND IS MADE BY THE CITY OF HOUSTON FOR ANY PURPOSES WHATSOEVER. THE CITY OF HOUSTON ASSUMES NO RESPONSIBILITY FOR INCORRECT RESULTS OR DAMAGES RESULTING FROM ITS USE.

1. SET POSTS AND EXCAVATE 4"x4" TRENCH UPSLOPE ALONG LINE OF POSTS (SEE NOTE 1).

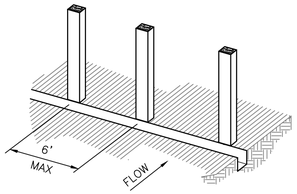

2. SECURE WIRE REINFORCING TO POSTS (SEE NOTE 2).

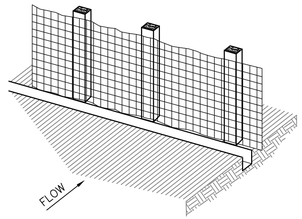

3. ATTACH FILTER MATERIAL TO WIRE REINFORCING AND EXTEND IT INTO THE TRENCH (SEE NOTE 3).

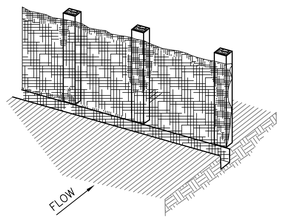

4. BACKFILL AND COMPACT THE EXCAVATED SOIL.

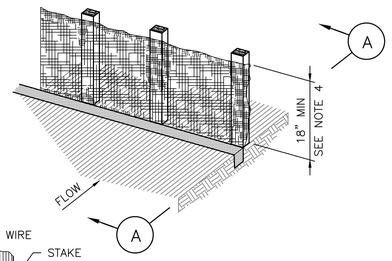

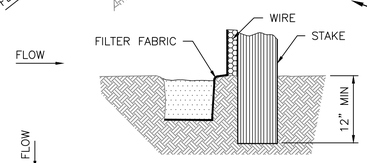

SECTION A–A
EXTENSION OF FABRIC INTO TRENCH

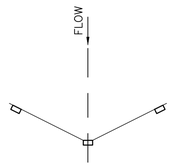

PLAN VIEW

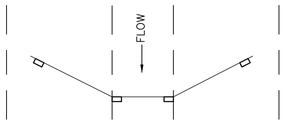

PLAN VIEW

POINTS A SHOULD BE HIGHER THAN POINT B, OR AT TOP OF BANK (TYP)

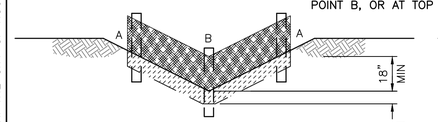

"V–DITCH" SECTION/ELEVATION

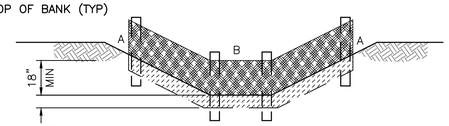

TRAPEZOIDAL SECTION/ELEVATION

CONSTRUCTION NOTES:

1. SET 2 INCH BY 2 INCH WOODEN STAKES SPACED A MAX OF 6 FEET APART AND EMBEDDED A MIN OF 12 INCHES.
2. WOVEN WIRE REINFORCING TO BE FASTENED SECURELY TO BARRIER POSTS WITH STAPLES.
3. FILTER CLOTH TO BE FASTENED SECURELY TO WOVEN WIRE REINFORCING, WITH TIES SPACED EVERY 24 INCHES AT TOP AND MIDSECTION.
4. MINIMUM HEIGHT OF FILTER SHOULD BE 18 INCHES AND A MAXIMUM OF 36 INCHES ABOVE NATURAL GROUND.
5. WHEN TWO SECTIONS OF FILTER CLOTH ADJOIN EACH OTHER THEY SHALL BE OVERLAPPED 6 INCHES AT THE POSTS, AND FOLDED.
6. SEE COH STANDARD SPECIFICATION 01570 FOR FILTER FABRIC BARRIER.

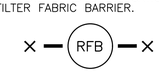

SYMBOL

REINFORCED FILTER FABRIC BARRIER

1. SET POSTS AT REQUIRED SPACING.

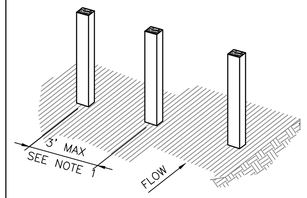

2. EXCAVATE A 4"x4" TRENCH UPSLOPE ALONG THE LINE OF STAKES.

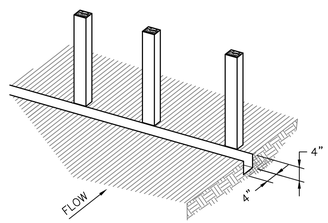

3. ATTACH FILTER MATERIAL TO STAKES AND EXTEND IT INTO THE TRENCH.

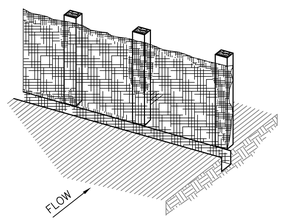

4. BACKFILL AND COMPACT THE EXCAVATED SOIL.

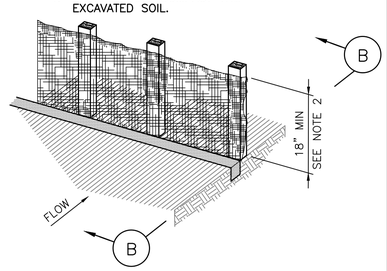

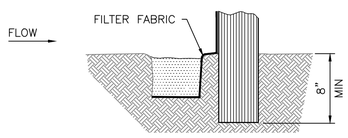

SECTION B–B
EXTENSION OF FABRIC INTO TRENCH

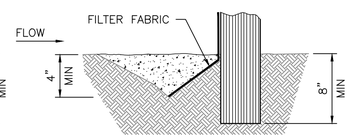

SECTION B–B
ALTERNATE
V–TRENCH EXTENSION OF FABRIC INTO TRENCH

CONSTRUCTION NOTES:

1. 2 INCH THICK BY 2 INCH WOODEN STAKES TO BE SET AT MAX SPACING OF 3 FEET AND EMBEDDED A MIN OF 8 INCHES. IF PREASSEMBLED BARRIER WITH SUPPORT NETTING IS USED, SPACING OF POST MAY BE INCREASED TO 8 FEET MAX.
2. ATTACH FILTER FABRIC TO WOODEN STAKES. FILTER FABRIC BARRIER SHALL HAVE A MIN HEIGHT OF 18 INCHES AND MAX HEIGHT OF 36 INCHES ABOVE NATURAL GROUND.
3. WHEN TWO SECTIONS OF FILTER CLOTH ADJOIN EACH OTHER THEY SHOULD BE OVERLAPPED 6 INCHES AT THE POSTS, AND FOLDED.
4. SEE COH STANDARD SPECIFICATION 01570 FOR FILTER FABRIC BARRIER.

SYMBOL

FILTER FABRIC BARRIER

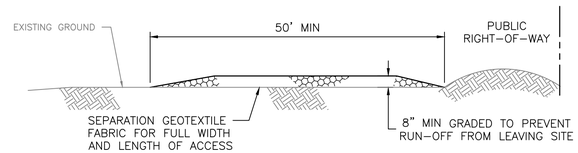

PROFILE

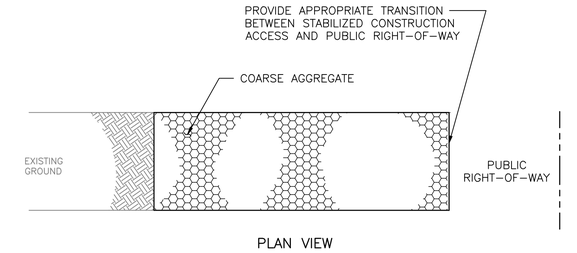

PLAN VIEW

CONSTRUCTION NOTES:

1. LENGTH SHALL BE AS SHOWN ON THE CONSTRUCTION DRAWINGS, BUT NOT LESS THAN 50 FEET.
2. THICKNESS SHALL BE NOT LESS THAN 8 INCHES.
3. WIDTH SHALL BE NOT LESS THAN FULL WIDTH OF ALL POINTS OF INGRESS OR EGRESS.
4. STABILIZATION FOR OTHER AREAS SHALL HAVE THE SAME AGGREGATE THICKNESS AND WIDTH REQUIREMENTS AS THE STABILIZED CONSTRUCTION ACCESS, UNLESS OTHERWISE SHOWN ON THE CONSTRUCTION DRAWINGS.
5. STABILIZED AREA MAY BE WIDENED OR LENGTHENED TO ACCOMODATE A WASHING AREA. AN OUTLET SEDIMENT TRAP MUST BE PROVIDED FOR THE WASHING AREA.
6. COH STANDARD SPECIFICATION 01575 FOR STABILIZED CONSTRUCTION ACCESS.
7. STABILIZED CONSTRUCTION ACCESS SHALL BE MAINTAINED FREE OF SEDIMENT FOR THE DURATION OF THE PROJECT.

SYMBOL

STABILIZED CONSTRUCTION ACCESS

CONSTRUCTION NOTES:

1. SEE CONSTRUCTION NOTES FOR RFB.

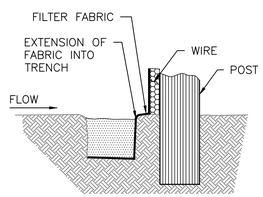

SECTION D–D

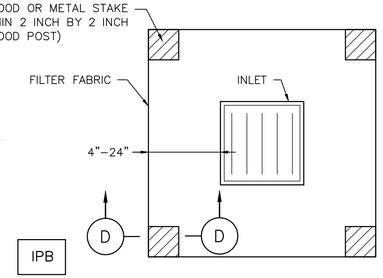

SYMBOL

PLAN VIEW

SILT FENCE INLET PROTECTION BARRIER

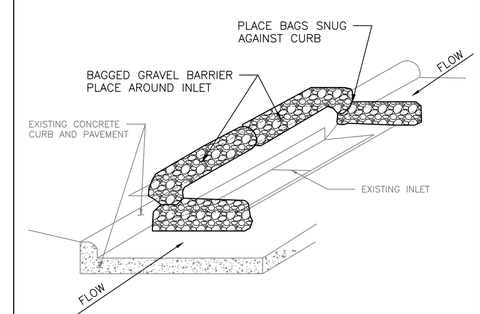

INLET PROTECTION BARRIER
(FOR STAGE II INLETS)
BAGGED GRAVEL BARRIER

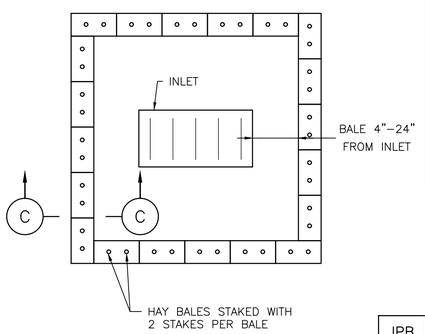

PLAN VIEW

SYMBOL

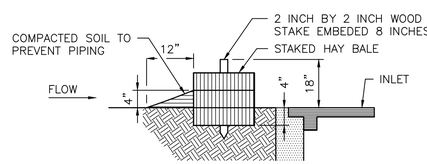

SECTION C–C

HAY BALE INLET PROTECTION BARRIER

APPROVED BY: Signed by: 1BEBB22072F84DC...	APPROVED BY: Signed by: BE463EF0DF454EB...
CITY ENGINEER	DIRECTOR OF HOUSTON PUBLIC WORKS
EFF DATE: MAR–02–2026	DWG NO: 01570–01

HATCH
750 TOWN & COUNTRY BLVD
SUITE 650
HOUSTON, TX 77024
P: 832–930–7670
TX FIRM NUMBER: F– 314
SURVEYED BY:
AMANI ENGINEERING, INC.
FB NO P–6357

STATE OF TEXAS · MARK G. SCALLY · 136279 · LICENSED PROFESSIONAL ENGINEER · 3/17/26

CITY OF HOUSTON
HOUSTON PUBLIC WORKS STANDARD

LIFT STATION RENEWAL & REPLACEMENT PROJECT
STORM WATER POLLUTION PREVENTION PLAN DETAILS

WBS NUMBER	FOR CITY OF HOUSTON USE ONLY
R–000267–0173–4	HOUSTON PUBLIC WORKS ACCEPTED AND FILED 82825 CITY DRAWING NUMBER Approval Date 08/14/26 HOUSTON TX
DRAWING SCALE	
NOT TO SCALE	
CITY OF HOUSTON PM	
NUPUR KRISHNAN, P.E.N.K.	
SHEET NO. 06 OF 274	

Z0G06

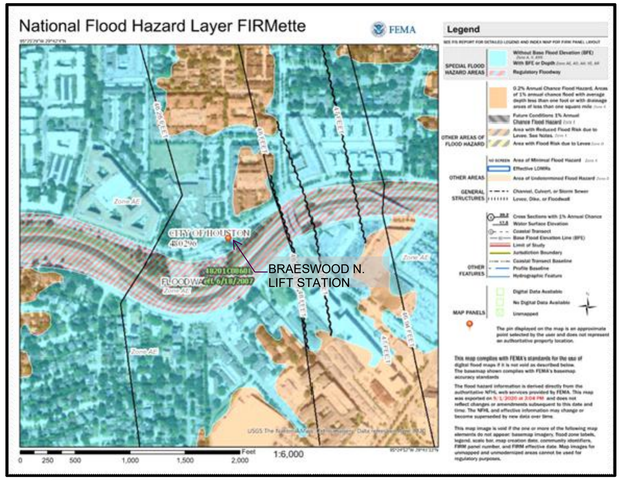

BRAESWOOD NORTH LIFT STATION

2707 NORTH BRAESWOOD BOULEVARD - HOUSTON TX, 77025
KEY MAP 532-L COUNCIL DISTRICT C

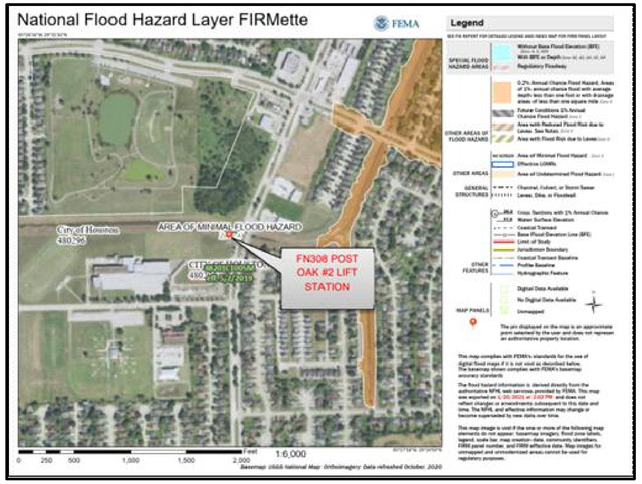

POST OAK #2 LIFT STATION

16500 SOUTH POST OAK ROAD - HOUSTON TX, 77053
KEY MAP 611-C COUNCIL DISTRICT K

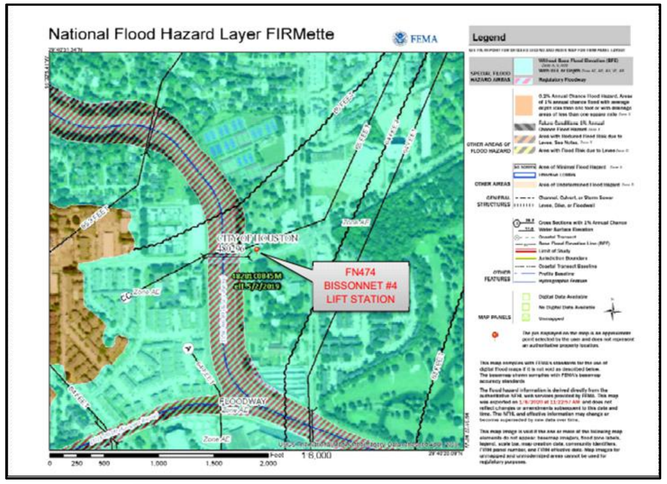

BISSONNET #4 LIFT STATION

8620 BISSONNET STREET - HOUSTON TX, 77074
KEY MAP 530-T COUNICIL DISTRICT J

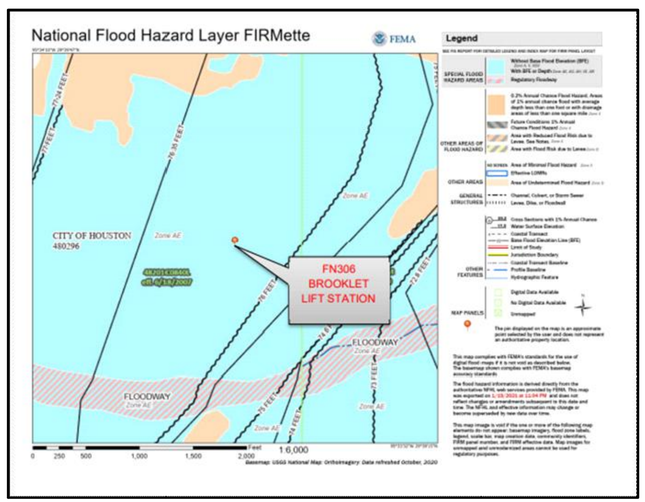

BROOKLET LIFT STATION

11126 BROOKLET DRIVE - HOUSTON TX, 77099
KEY MAP 529-Y COUNCIL DISTRICT J

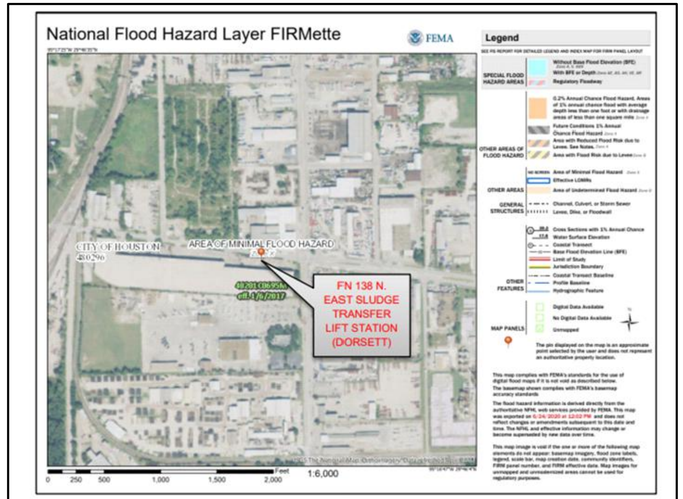

NORTHEAST SLUDGE TRANSFER (DORSETT) LIFT STATION

MARKET STREET AND DORSETT STREET - HOUSTON TX, 77029
KEY MAP 495-E COUNCEL DISTRICT H

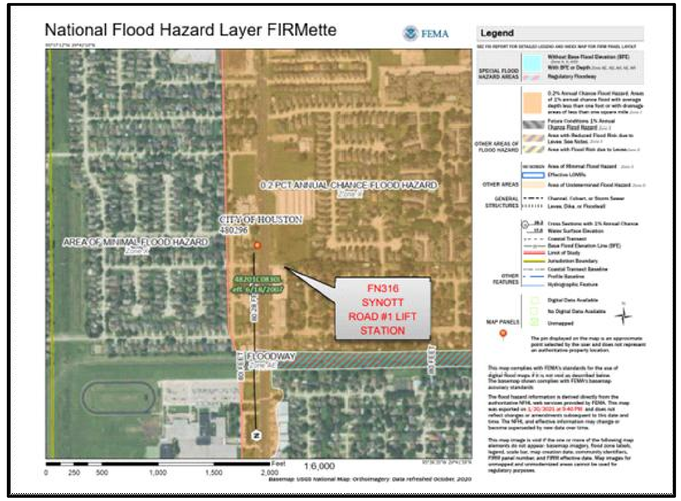

SYNOTT ROAD #1 LIFT STATION

7330 SYNOTT ROAD - HOUSTON TX, 77083
KEYMAP 528-L COUNCIL DISTRICT F

NO.	DATE	REVISION	APP.

HATCH
750 TOWN & COUNTRY BLVD
SUITE 650
HOUSTON, TX 77024
P: 832-930-7670
TX FIRM NUMBER: F-314

SURVEYED BY:
AMANI ENGINEERING, INC.
FB NO. P-6357

STATE OF TEXAS
MARK G. SCALLY
136279
LICENSED
PROFESSIONAL ENGINEER
5/26

CITY OF HOUSTON
HOUSTON PUBLIC WORKS

LIFT STATION RENEWAL & REPLACEMENT PROJECT
FLOODPLAIN MAPS

WBS NUMBER	FOR CITY OF HOUSTON USE ONLY
R-000267-0173-4	HOUSTON PUBLIC WORKS ACCEPTED AND FILED 82825 CITY DRAWING NUMBER Approval Date 08/14/26 HOUSTON TX
DRAWING SCALE	
N.T.S.	
CITY OF HOUSTON PM	
NUPUR KRISHNAN, P.E.N.K.	
Z0G07	SHEET NO. 07 OF 274

PLOT STYLE: Monochrome.ctb PLOTTED: 1/30/2026 12:50 PM

FILE PATH: C:\pwworking\hatch-dpd-south_central_us\dms54962\H374729-0000-221-294-0007.dwg

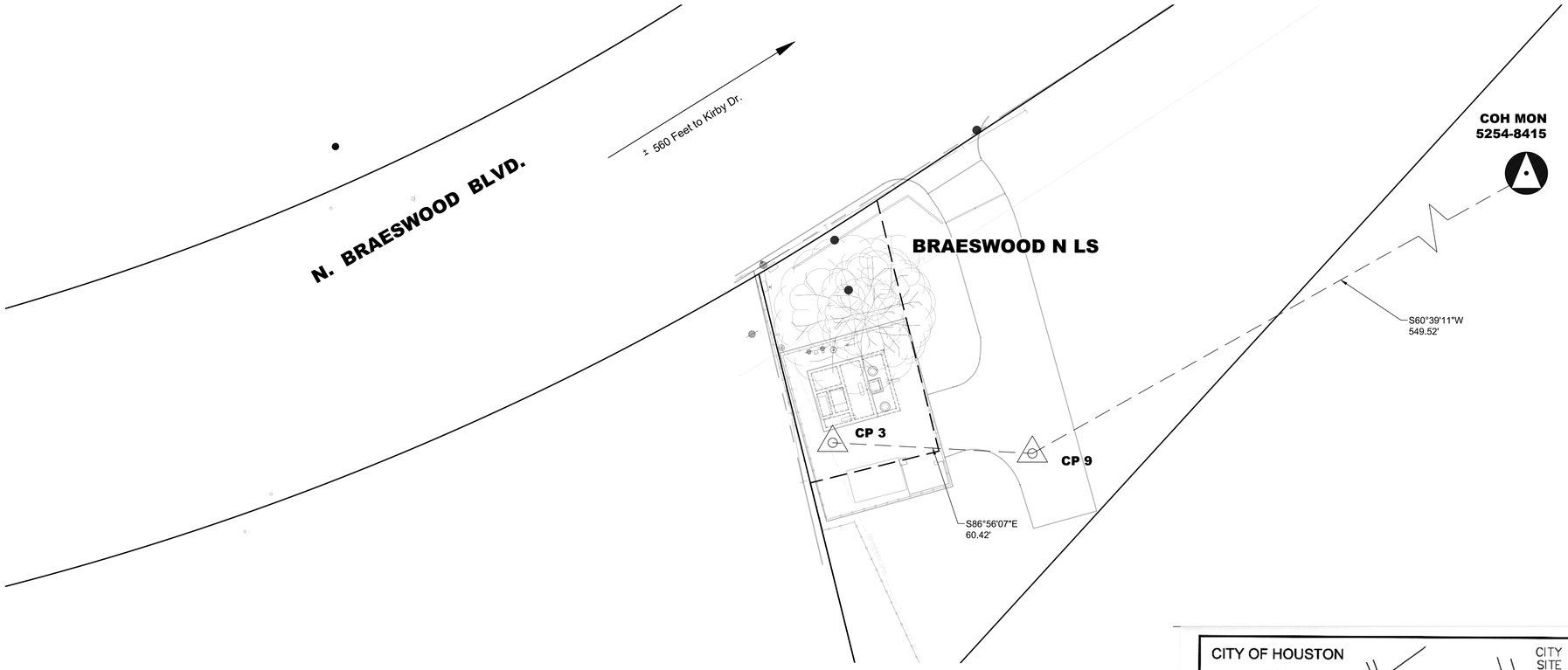

N

20 10 0 20

SCALE IN FEET
22 X 34 : 1" = 20'

NO.	DATE	REVISION	APP.

SURVEY NOTES:

1. ALL BEARINGS AND COORDINATES ARE BASED ON THE TEXAS COORDINATE SYSTEM, SOUTH CENTRAL ZONE (4204) NORTH AMERICAN DATUM OF 1983 (2011 ADJ) 2010 EPOCH, U.S. SURVEY FEET. COORDINATES SHOWN HEREON ARE GRID VALUES AND ALL DISTANCES SHOWN ARE SURFACE VALUES. THE COMBINED SCALE FACTOR IS 0.99988535.
2. GRID COORDINATES/SCALE FACTOR = SURFACE COORDINATES.
3. FIELD DATA COLLECTED OCTOBER 2024.
4. ALL ELEVATIONS SHOWN HEREON ARE REFERENCED TO THE NORTH AMERICAN VERTICAL DATUM OF 1988 (NAVD88) GEOID 18. ALL CONTROL NETWORK ELEVATIONS ARE TIED TO CITY SURVEY 5254-8415 SITE CONTROL MONUMENT USING DIFFERENTIAL LEVELING.
5. THE CONVERSION FACTOR FROM PROJECT LEVELED G18 ELEVATION TO THE HCFCD CALLED G99 ELEVATION = -0.11'.
6. ACCORDING TO FEMA'S FLOOD INSURANCE RATE MAP (FIRM) PANEL NO. 48201C0860L. DATED 06/18/2007, A PORTION OF THE SUBJECT PROPERTY LIES WITHIN ZONE AE, FLOODWAY AREA. THE REMAINDER OF THE PROPERTY IS LOCATED IN ZONE A, SPECIAL FLOOD HAZARD AREA (SFHA). APPROXIMATE LIMITS (IF SHOWN) ARE BASED ON AVAILABLE SHAPE FILES PROVIDED BY FEMA. THIS FLOOD STATEMENT IS BASED ON ENGINEERING INFORMATION PROVIDED BY FEMA AND SHALL NOT CREATE LIABILITY ON THE PART OF THE SURVEYOR.

PROJECT BENCH MARK:

A BRASS DISK LOCATED ON THE EASTERLY SIDE OF KIRBY DRIVE, APPROXIMATELY 132 FEET SOUTH OF N. BRAESWOOD BOULEVARD INTERSECTION.
OBSERVED ELEVATION = 44.41' (NAVD 88 GEOID 18)
CALLED ELEVATION =44.30' (GEOID 99)

CP 3 -- X-CUT

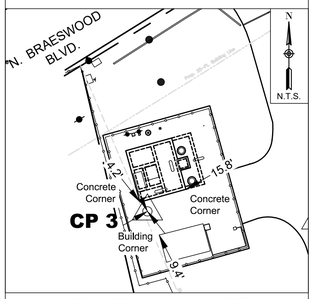

GRID NORTHING : 13,818,327.79
GRID EASTING : 3,105,129.03

CP 9 -- X-CUT

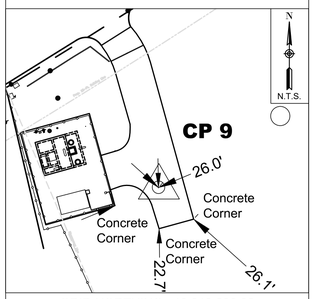

GRID NORTHING : 13,818,288.32
GRID EASTING : 3,105,061.80

CP No.	Grid Northing	Grid Easting	Elevation	Description
3	13,818,327.79	3,105,129.03	45.80	X-CUT
9	13,818,288.32	3,105,061.80	47.92	X-CUT

CITY OF HOUSTON

CITY SURVEY 5254-8415
SITE CONTROL MONUMENT
FLOODPLAIN RM#040130

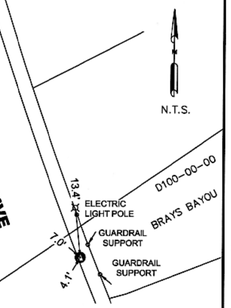

Project WBS# R-000267-0175-3
Texas Coordinate System of 1983,
South Central Zone, U. S. Survey Feet
X= 3,105,540.74
Y= 13,818,557.60

Lat.= N 29° 41' 50.8925"
Lon.= W 95° 25' 4.5001"

Keymap Page: 532L
Orthometric Elevation = 44.41
Ellipsoid Height= -45.15
Geoid: GEOID 18
Datum Source & Adjustment:
2-HR STATIC GPS OBSERVATION
MADE ON MONUMENT ON 10/24/2024

Reference Frame Used: NAD_83(2011)(EPOCH: 2010.0000)
Vertical Adjustment used: NAVD 88 GEOID18
General Location: ON THE EASTERLY SIDE OF KIRBY DRIVE, APPROXIMATELY 132 FEET SOUTH OF N. BRAESWOOD BOULEVARD INTERSECTION.

Date Set: MAY 14, 2003 Type of Mark: BRASS DISK

3 Nearest project control points (bearings and distances stated below):
1. CP #2, 5/8" IRON ROD CAPPED "AMANI", S 60° 49' 49" W, 471.57'
2. CP #3, X-CUT , S 63° 44' 24" W, 601.40'
3. CP #7, MAG NAIL , S 67° 13' 34" W, 666.29'

NOTE:
1. Bearings are grid bearings.
2. Combined Factor (C.F)= 0.99988535.

Surface= Grid
C.F.

Surveyed By: Amani Engineering, Inc.
11011 Richmond Avenue, Suite 700
Houston, TX 77042
Tel. (713)270-5700
Texas Registered Survey Firm 10028200

STATE OF TEXAS REGISTERED CHRISTINA I. WEAVER 6753 PROFESSIONAL LAND SURVEYOR 2.12.25

\\AEFILS01\Data\Cadd\2024\24013 - Hatch - COH FY20 Lift Stations\Monument\Braeswood N. LS\5254-8415.dwg

G2X01

AMANI ENGINEERING, INC.
11011 RICHMOND AVENUE
SUITE 700
HOUSTON, TEXAS 77024
TEL: (713) 270-5700
TBPE REG. NO. F-4528
TBPELS REG. NO. 1028200

HATCH
750 TOWN & COUNTRY BLVD.
SUITE 650
HOUSTON, TEXAS 77024
P:832-930-7670
TX FIRM NUMBER: F-314

SURVEYED BY:
AMANI ENGINEERING,INC.
FB NO. P-6357

STATE OF TEXAS REGISTERED WILLIAM H. REIMER III 4044 PROFESSIONAL LAND SURVEYOR
06-05-2026

CITY OF HOUSTON

HOUSTON PUBLIC WORKS

LIFT STATION RENEWAL & REPLACEMENT PROJECT

BRAESWWOD N LIFT STATION
SURVEY CONTROL MAP

WBS NUMBER	R-000267-0173-4
DRAWING SCALE	1" = 20'
CITY OF HOUSTON PM	NUPUR KRISHNAN P.E. N.K.
SHEET NO.	8 OF 274

FOR CITY OF HOUSTON USE ONLY

HOUSTON PUBLIC WORKS
ACCEPTED AND FILED
82825
CITY DRAWING NUMBER
Approval Date 08/14/26
HOUSTON TX

FILE PATH: P:\Cadd\2024\24013 - Hatch - COH FY20 Lift Stations\CAD_DWG\Survey Control Drawings\Control-BraeswoodN.LS..dwg

0 1 2 3
ORIGINAL SCALE IN INCHES
FOR REDUCED PLANS

NO.	DATE	REVISION	APP.

SHEET NOT USED

HATCH

750 TOWN & COUNTRY BLVD
SUITE 650
HOUSTON, TX 77024
P: 832-930-7670
TX FIRM NUMBER: F- 314

SURVEYED BY:
AMANI ENGINEERING, INC.
FB NO. P-6357

STATE OF TEXAS
MARK G. SCALLY
136279
LICENSED PROFESSIONAL ENGINEER
5/1/26

CITY OF HOUSTON
HOUSTON PUBLIC WORKS

LIFT STATION RENEWAL & REPLACEMENT PROJECT

WBS NUMBER
R-000267-0173-4
DRAWING SCALE
AS NOTED
CITY OF HOUSTON PM
NUPUR KRISHNAN P.E. N.K.
SHEET NO. 09 OF 274

FOR CITY OF HOUSTON USE ONLY

HOUSTON PUBLIC WORKS
ACCEPTED AND FILED
82825
CITY DRAWING NUMBER
Approval Date 08/14/26
HOUSTON TX

E1C02

PLOTTED: 5/14/2026 7:20 AM
PLOT STYLE: ----
FILE PATH: \\wusppplot01\d$\Global ProjectWise Plotting - WUS\Queue 2\queue2.dwg

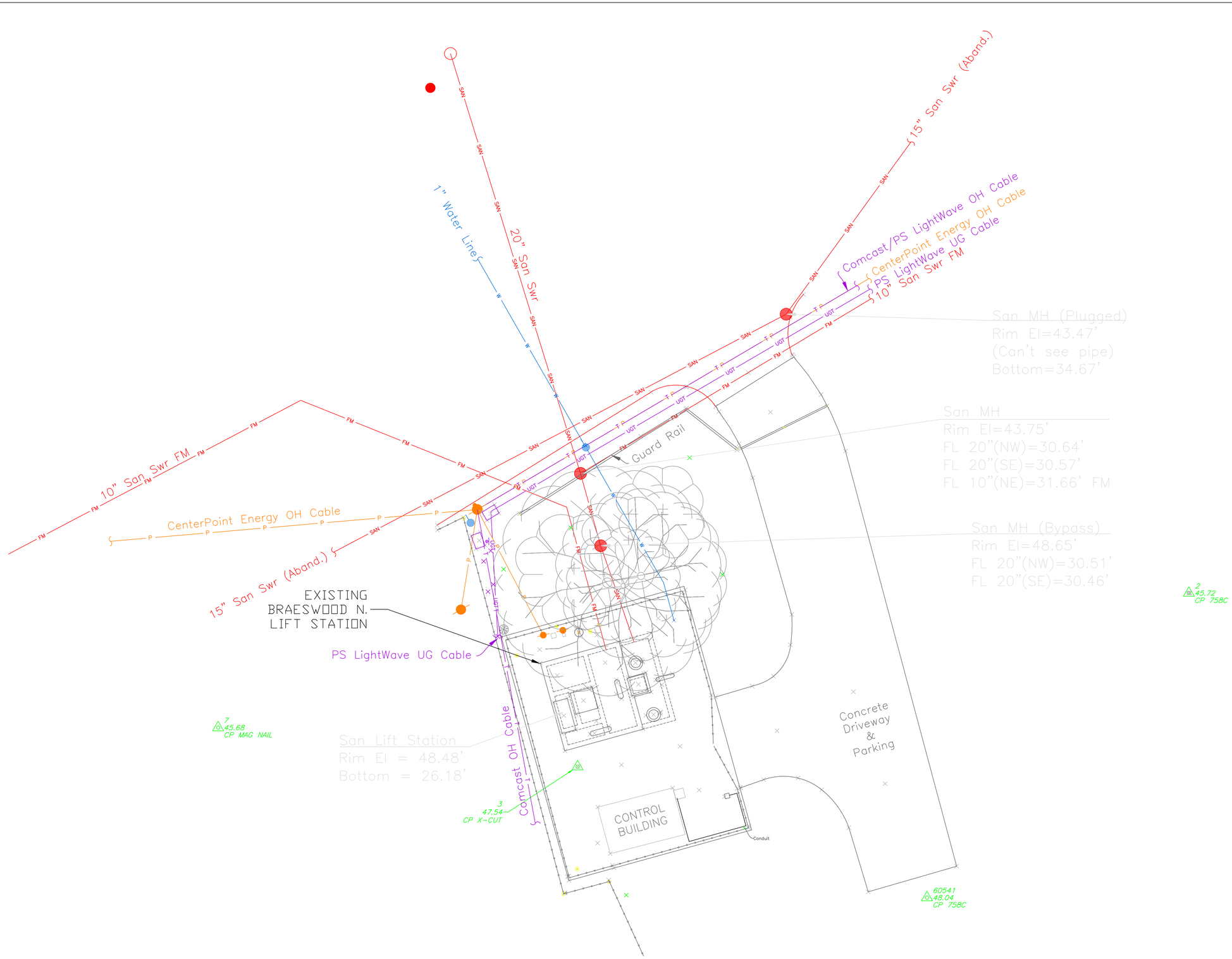

N

NOTE:

1. LS SITE IS LOCATED IN THE 100 YEAR FLOODPLAIN

NO.	DATE	REVISION	APP.

HATCH
750 TOWN & COUNTRY BLVD
SUITE 650
HOUSTON, TX 77024
P: 832-930-7670
TX FIRM NUMBER: F- 314

SURVEYED BY:
AMANI ENGINEERING, INC.
FB NO. P-6357

STATE OF TEXAS
MARK G. SCALLY
136279
LICENSED
PROFESSIONAL ENGINEER
5/14/26

CITY OF HOUSTON
HOUSTON PUBLIC WORKS

LIFT STATION RENEWAL & REPLACEMENT PROJECT
BRAESWOOD N LS
EXISTING CIVIL TOPOGRAPHIC PLAN

WBS NUMBER	FOR CITY OF HOUSTON USE ONLY
R-000267-0173-4	HOUSTON PUBLIC WORKS ACCEPTED AND FILED 82825 CITY DRAWING NUMBER Approval Date 08/14/26 HOUSTON TX
DRAWING SCALE	
AS NOTED	
CITY OF HOUSTON PM	
NUPUR KRISHNAN P.E. N.K.	
SHEET NO. 10 OF 274	

0 10 20 Feet

E1C03

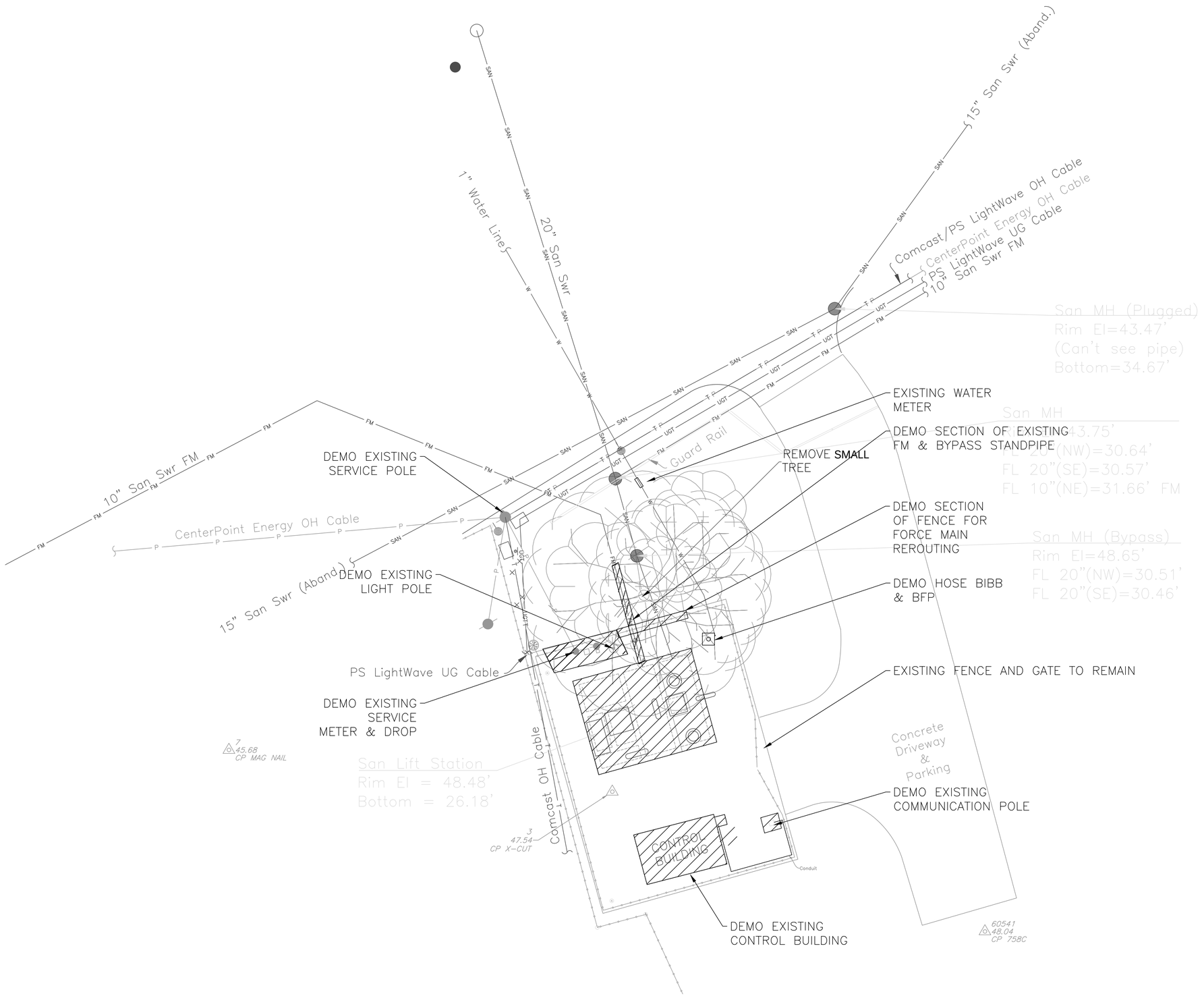

NO.	DATE	REVISION	APP.

NOTE: THE CITY SHALL HAVE THE FIRST RIGHT OF REFUSAL TO RETAIN OR SALVAGE ALL ITEMS SHOWN TO BE DEMOLISHED AND/OR REMOVED, INCLUDING BUT NOT LIMITED TO PUMPS, HATCHES AND ELECTRICAL AND INSTRUMENTATION COMPONENTS. PRIOR TO INITIATING DEMOLITION WORK, THE CONTRACTOR AND THE DESIGNATED FIELD INSPECTOR SHALL MAKE A JOINT INSPECTION OF EACH SITE TO IDENTIFY ALL EQUIPMENT TO BE RETAINED BY THE CITY FOR SALVAGE OR REUSE. ITEMS IDENTIFIED FOR SALVAGE SHALL BE CAREFULLY REMOVED TO PROTECT FROM DAMAGE. ALL OTHER ITEMS SHOWN TO BE DEMOLISHED/REMOVED THAT ARE NOT RETAINED BY THE CITY SHALL BE PROPERLY REMOVED FROM THE SITE AND HANDLED PER SPECIFICATION 02220–DEMOLITION AT NO ADDITIONAL COST TO THE CITY. CONTACT DESIGNATED CITY REPRESENTATIVE (CAPITAL PROJECTS CONSTRUCTION INSPECTOR) FOR WASTEWATER TREATMENT PLANT SALVAGE AT LEAST 72 HOURS PRIOR TO DEMOLITION IN ORDER TO COORDINATE REMOVAL OF ANY ITEMS THE CITY WISHES TO CLAIM AND SALVAGE. THE CONTRACTOR SHALL DELIVER ALL SALVAGE ITEMS TO A LOCATION WITHIN THE CITY DETERMINED BY THE CITY.

HATCH
750 TOWN & COUNTRY BLVD
SUITE 650
HOUSTON, TX 77024
P: 832-930-7670
TX FIRM NUMBER: F-314

SURVEYED BY:
AMANI ENGINEERING, INC.
FB NO. P-6357

STATE OF TEXAS
MARK G. SCALLY
136279
LICENSED PROFESSIONAL ENGINEER
5/1/26

CITY OF HOUSTON
HOUSTON PUBLIC WORKS

LIFT STATION RENEWAL & REPLACEMENT PROJECT
BRAESWOOD N LS
CIVIL DEMOLITION PLAN

WBS NUMBER	FOR CITY OF HOUSTON USE ONLY
R-000267-0173-4	HOUSTON PUBLIC WORKS ACCEPTED AND FILED 82825 CITY DRAWING NUMBER Approval Date 08/14/26 HOUSTON TX
DRAWING SCALE	
AS NOTED	
CITY OF HOUSTON PM	
NUPUR KRISHNAN P.E. N.K.	
SHEET NO. 11 OF 274	

E1C04

PLOTTED: 1/30/2026 11:07 AM
PLOT STYLE: Grayscale.ctb
FILE PATH: C:\pwworking\hatch-dpd-south_central_us\dms511138\H374729-0000-220-251-0002.dwg

CONSTRUCTION NOTES:

1. CONTRACTOR SHALL BE FULLY RESPONSIBLE FOR ANY DAMAGES TO EXISTING WATER, WASTEWATER, STORMWATER LINES AND TRAFFIC CONTROL DEVICES. ALL DAMAGES SHALL BE IN ACCORDANCE WITH THE "STANDARD CONSTRUCTION SPECIFICATION" REFERENCED AT NO COST TO THE CITY.
2. ADEQUATE DRAINAGE SHALL BE MAINTAINED AT ALL TIMES DURING CONSTRUCTION AND ANY DRAINAGE DITCH OR STRUCTURE DISTURBED DURING CONSTRUCTION SHALL BE RESTORED TO THE SATISFACTION OF THE OWNING AUTHORITY.
3. COAT WET WELL AND SAN MANHOLES IN ACCORDANCE WITH SPEC SECTION 09901.
4. CONTRACTOR SHALL TAKE NECESSARY PRECAUTIONS TO PROTECT ROOT SYSTEMS OF SHRUBS, PLANTS, AND TREES ALONG THE AREA OF EXCAVATION.
5. CONTRACTOR SHALL COORDINATE WITH CENTERPOINT ENERGY TO DE-ENERGIZE THE LIFT STATION AND OTHER ELECTRICAL EQUIPMENT ON SITE.
6. SANITARY SEWER MANHOLES AND HATCHES INSTALLED BELOW THE FLOODPLAIN ELEVATION SHALL HAVE WATERTIGHT MANHOLE FRAMES AND COVERS OR HATCHES.
7. CONTRACTOR SHALL COMPLY WITH THE LATEST EDITION OF OSHA REGULATIONS AND THE STATE OF TEXAS LAWS CONCERNING EXCAVATION.
8. CONTRACTOR TO COORDINATE LAYDOWN AREA WITH OWNER.

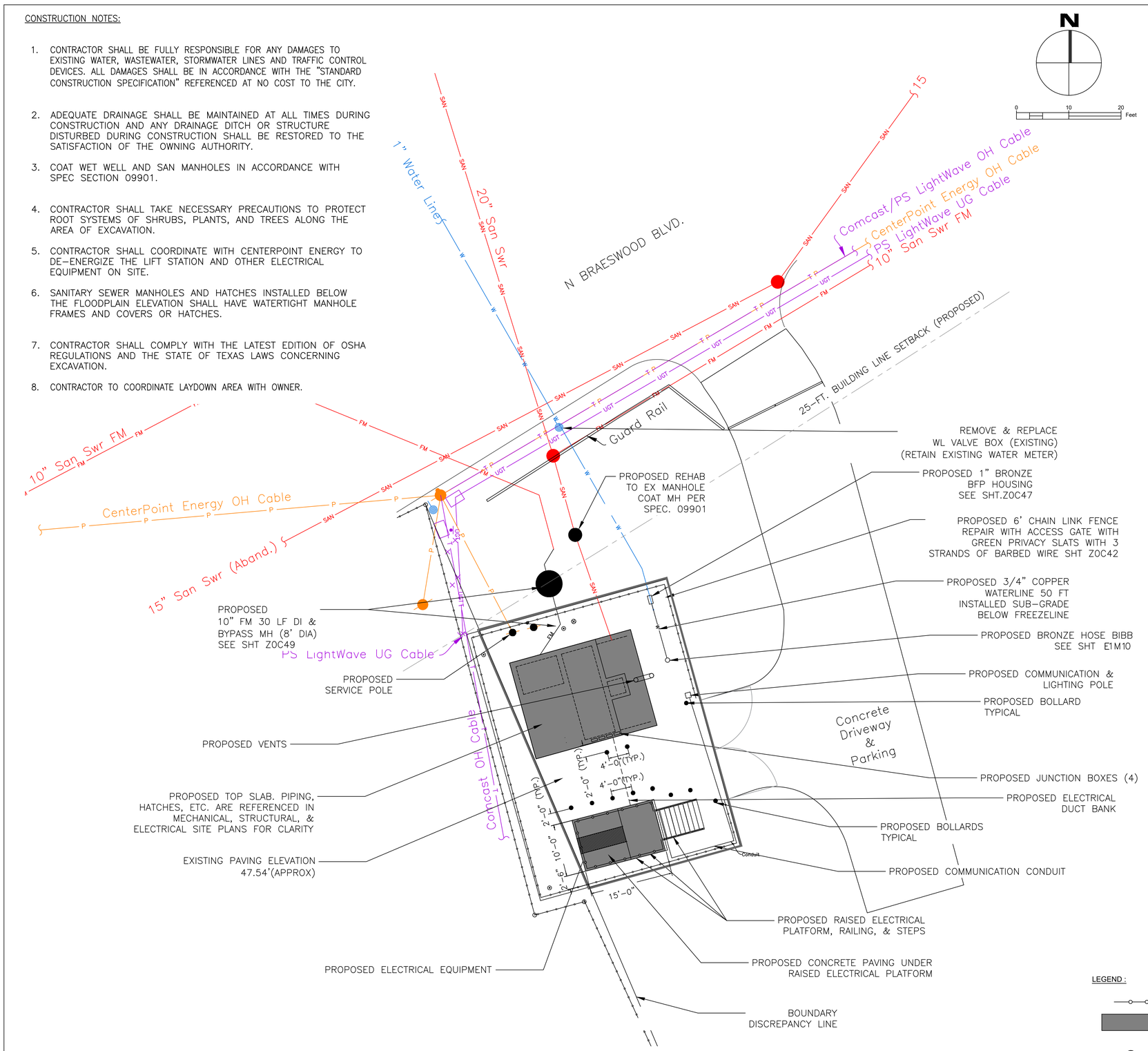

NOTES:

GENERAL

1. THIS IS A LIFT STATION REHABILITATION PROJECT (REPLACING PIPES, PUMPS, CONCRETE TOP SLAB AND HATCHES, AND ELECTRICAL FACILITIES) UNDER CONSENT DECREE FOR EARLY ACTION COMPLETION.
2. THIS PROPOSED SITE DEVELOPMENT PLAN PROVIDES A GENERAL OVERVIEW OF THE PROPOSED IMPROVEMENTS WITHIN THE SITE. PLEASE REFER TO PROPOSED SITE PLANS FOR ELECTRICAL, MECHANICAL, AND STRUCTURAL INFORMATION CONTAINED IN THIS DRAWING SET FOR MORE DETAILED INFORMATION.

PLANNING

1. THERE IS A BOUNDARY DISCREPANCY BEING ADDRESSED. PROPOSED IMPROVEMENTS SHALL NOT ENCROACH WITHIN THE BOUNDARY DISCREPANCY AREA.
2. THERE IS A BUILDING SETBACK LINE 25' FROM THE PROPERTY LINE. NO BUILDING STRUCTURES ARE PROPOSED WITHIN THE BUILDING SET BACK LINE.

PLATTING

1. A SUBDIVISION PLAT FOR THIS LIFT STATION SITE IS NOT REQUIRED BASED ON THE EXEMPTION CONTAINED CITY OF HOUSTON CODE OF ORDINANCES, CHAPTER 42- SUBDIVISIONS, DEVELOPMENTS AND PLATTING, ARTICLE 1.- IN GENERAL, SEC.42-4.(b)(1)-ENFORCEMENT AND PENALTIES, BECAUSE THE CURRENT DEED CONFIGURATION OF THE PROPERTY HAS NOT BEEN REVISED, ALTERED OR SUBDIVIDED AFTER MARCH 15,1963.

FLOODPLAIN

1. LS SITE IS WITHIN THE 100-YEAR FLOODPLAIN.
2. EXISTING ELECTRICAL BUILDING PROPOSED TO BE REMOVED WITH A RAISED PLATFORM 500-YEAR + 3' ELEVATION = 55.0'.
3. NO NET FILL IS BEING PROPOSED IN THE FLOODPLAIN. NO FLOODPLAIN MITIGATION IS REQUIRED. NOT LOCATED IN A KNOWN FLOODPLAIN" CONVEYANCE" AREA.
4. WATERTIGHT HATCHES ARE PROPOSED FOR LIFT STATION WET WELL.

STORMWATER

1. EXISTING IMPERVIOUS SURFACE: 4722 SF NO CHANGE PROPOSED IMPERVIOUS SURFACES.
2. TOTAL TRACT = 35,109 SQ FT
   BRAESWOOD N LS PORTION < 15,000 SQFT
   EXISTING IMPERVIOUS = 13.4%
   % PROPOSED IMPERVIOUS = 13.4%
4. NO SUBSURFACE DRAINAGE SYSTEM EXISTS OR IS PROPOSED ON SITE. REQUIRING A POINT SOURCE DISCHARGE IS NOT APPLICABLE PER 12/16/25 CLARIFICATION MEETING WITH CITY OF HOUSTON MUNICIPAL UTILITIES DEPT.

LANDSCAPING

1. NOT APPLICABLE FOR REHABILITATION OF WASTEWATER LIFT STATION.

SIDEWALKS

1. NOT PRACTICAL FOR THIS SITE LOCATION. NOT APPLICABLE FOR REHABILITATION OF WASTEWATER LIFT STATION.

OFF STREET PARKING

1. NOT APPLICABLE FOR REHABILITATION OF WASTEWATER LIFT STATION.

LEGEND :

PROPOSED FENCE LINE

PROPOSED CONCRETE PAVING EXTENTS

PROPOSED BOLLARDS (2' FROM NEAREST STRUCTURE 4' FROM EACH OTHER)(TYP)

NO.	DATE	REVISION	APP.

NOTICE:
FOR YOUR SAFETY, YOU ARE REQUIRED BY TEXAS LAW TO CALL 811 AT LEAST 48 HOURS BEFORE YOU DIG SO THAT UNDERGROUND LINES CAN BE MARKED. THIS SIGNATURE DOES NOT FULFILL YOUR OBLIGATION TO CALL 811

VERIFICATION OF PRIVATE UTILITY LINES

Mike Brower 07/31/26
Date

CenterPoint Energy natural gas utilities shown. (Gas service lines are not shown). This signature not be used for conflict verification.
Signature valid for six months.

Mike Brower 07/31/26
Date

CenterPoint Energy/UNDERGROUND Electrical Facilities Verification ONLY. (This signature verifies existing underground facilities - not to be used for conflict verification)
Signature valid for six months.

Marc F Johnson 7/28/26
Date

Approved for AT&T underground conduit facilities only.
Signature valid for one year.

FCM Engineers, PC
3300 S. Gessner Rd.
Suite 249
Houston, Texas 77063
T- 713-706-4412
F- 713-706-4410
Tx Firm No. 13481

HATCH
750 TOWN & COUNTRY BLVD
SUITE 650
HOUSTON, TX 77024
P: 832-930-7670
TX FIRM NUMBER: F-314

SURVEYED BY:
AMANI ENGINEERING, INC
FB NO. P-6357

STATE OF TEXAS
FRANK C. MBACHU
108363
LICENSED
PROFESSIONAL ENGINEER
07/14/26

CITY OF HOUSTON
HOUSTON PUBLIC WORKS

LIFT STATION RENEWAL & REPLACEMENT PROJECT
BRAESWOOD N LIFT STATION
PROPOSED CIVIL SITE DEVELOPMENT PLAN

WBS NUMBER	FOR CITY OF HOUSTON USE ONLY
R-000267-0173-4	HOUSTON PUBLIC WORKS ACCEPTED AND FILED 82825 CITY DRAWING NUMBER Approval Date 08/14/26 HOUSTON TX
DRAWING SCALE	
AS NOTED	
CITY OF HOUSTON PM	
NUPUR KRISHNAN P.E. N.K.	

E1C05 SHEET NO. 12 OF 274

PLOTTED: 8/11/2026 4:24 PM

FILE PATH: Y:\2022071 LIFT STATIONS RENEWAL AND REPLACEMENT (HATCH) WBS NO. R-000267-0173-3\Auto CAD\Site Plan 90%\Braeswood Topo -Site Plan\BRAESWOOD N Site Plan.dwg

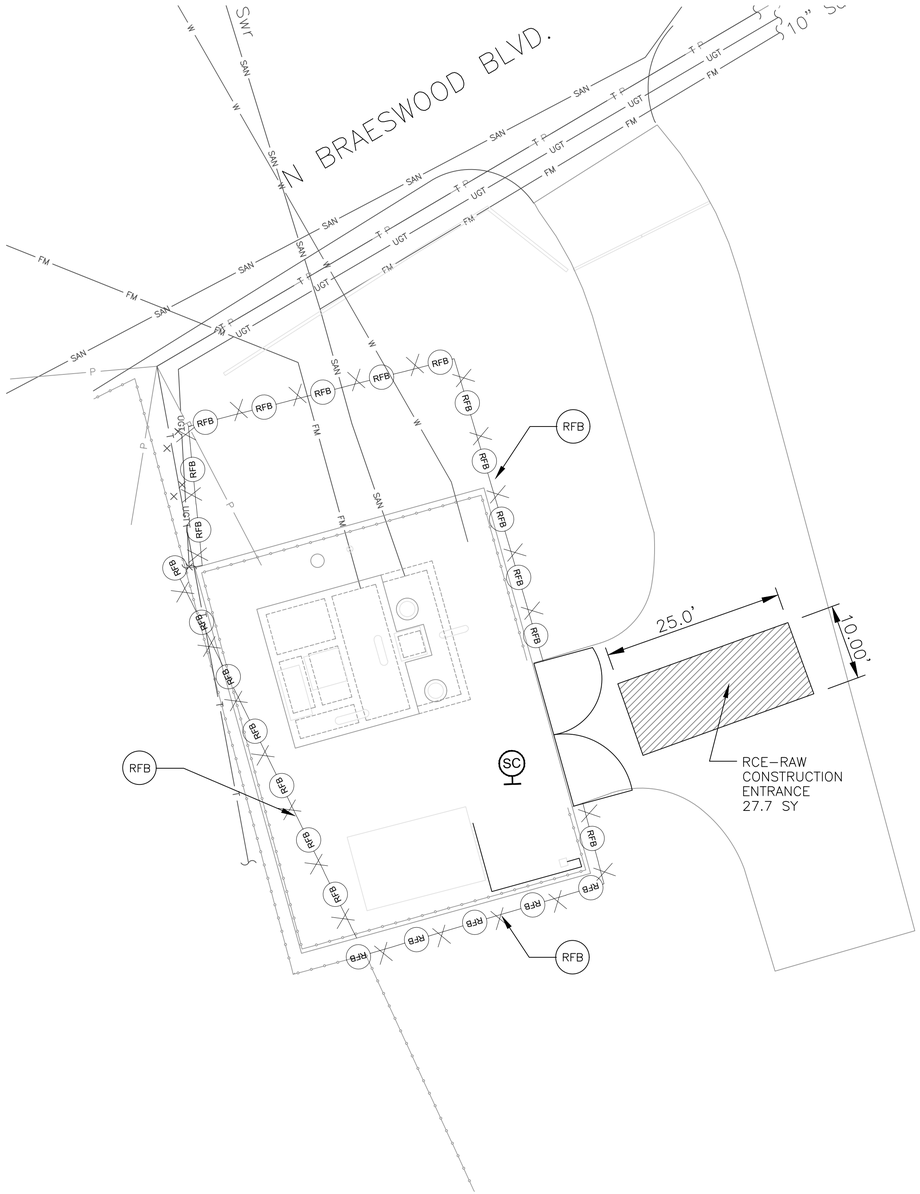

N

0 10 20 Feet

NO.	DATE	REVISION	APP.

LEGEND :

RFB — REINFORCED FILTER FABRIC BARRIER.

SC — STABILIZED CONSTRUCTION ACCESS

NOTES:

1. STORM WATER POLLUTION PLAN CONFORM TO SPECIFICATIONS AND DRAWINGS.
2. ALL DISTURBED AREAS THAT ARE NOT PAVED OR COVERED BY STRUCTURE SHALL BE SODDED OR HYDROMULCH SEEDED.
3. CONTRACTOR'S LAY DOWN/STORAGE AREA SHALL HAVE A STABILIZED CONSTRUCTION EXIT.
4. SEE SHEET Z0G06 FOR STORM WATER POLLUTION PREVENTION PLAN NOTES AND DETAILS.
5. CONTRACTOR SHALL PROVIDE A STABILIZED CONSTRUCTION EXIT, INCLUDING TRUCK WASHING AREA, VERIFIED IN THE FIELD AND AUTHORIZED BY ENGINEER.

FCM Engineers, PC
3300 S. Gessner Rd.
Suite 249
Houston, Texas 77063
T- 713-706-4412
F- 713-706-4410
Tx Firm No. 13481

HATCH
750 TOWN & COUNTRY BLVD
SUITE 650
HOUSTON, TX 77024
P: 832-930-7670
TX FIRM NUMBER: F-314

SURVEYED BY:
AMANI ENGINEERING, INC
FB NO. P-6357

STATE OF TEXAS
FRANK C. MBACHU
108363
LICENSED
PROFESSIONAL ENGINEER
3/23/2026

CITY OF HOUSTON
HOUSTON PUBLIC WORKS

LIFT STATION RENEWAL & REPLACEMENT PROJECT
BRAESWOOD N LIFT STATION
CIVIL SWPPP

WBS NUMBER
R-000267-0173-4
DRAWING SCALE
AS NOTED
CITY OF HOUSTON PM
NUPUR KRISHNAN P.E. N.K.

FOR CITY OF HOUSTON USE ONLY

HOUSTON PUBLIC WORKS
ACCEPTED AND FILED
82825
CITY DRAWING NUMBER
Approval Date 08/14/26
HOUSTON TX

E1C06 SHEET NO. 13 OF 274

FILE PATH: Y:\2022071 LIFT STATIONS RENEWAL AND REPLACEMENT (HATCH) WBS NO. R-000267-0173-3\Auto CAD\New SWPPP\Braeswood Topo\BASE-BraeswoodNLS.dwg PLOT STYLE: Grayscale.ctb PLOTTED: 6/5/2026 11:12 AM

PLOT STYLE: Monochrome.ctb PLOTTED: 7/27/2026 4:54 AM

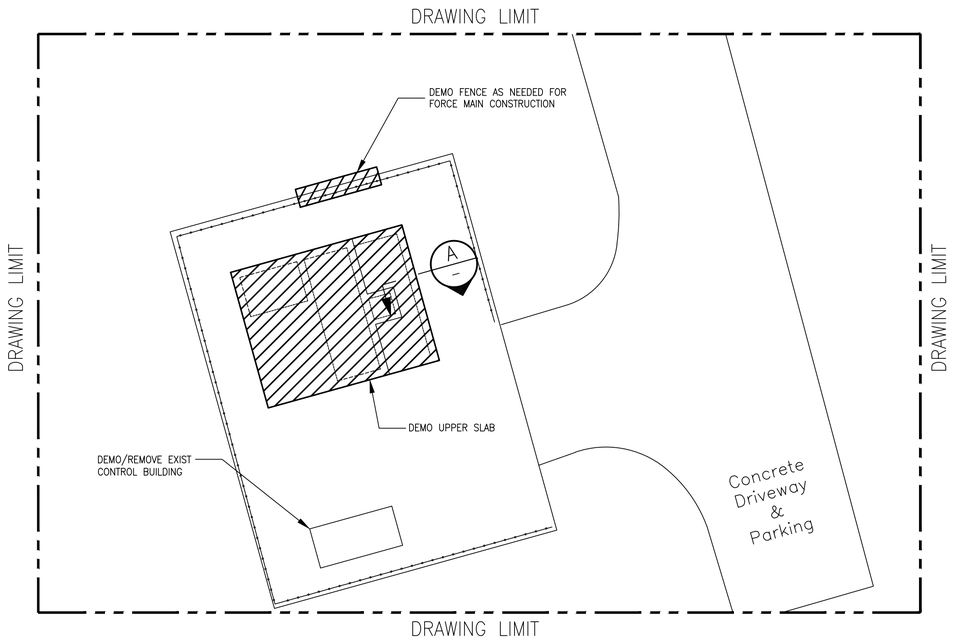

DEMO PLAN
SCALE: 1"=10'

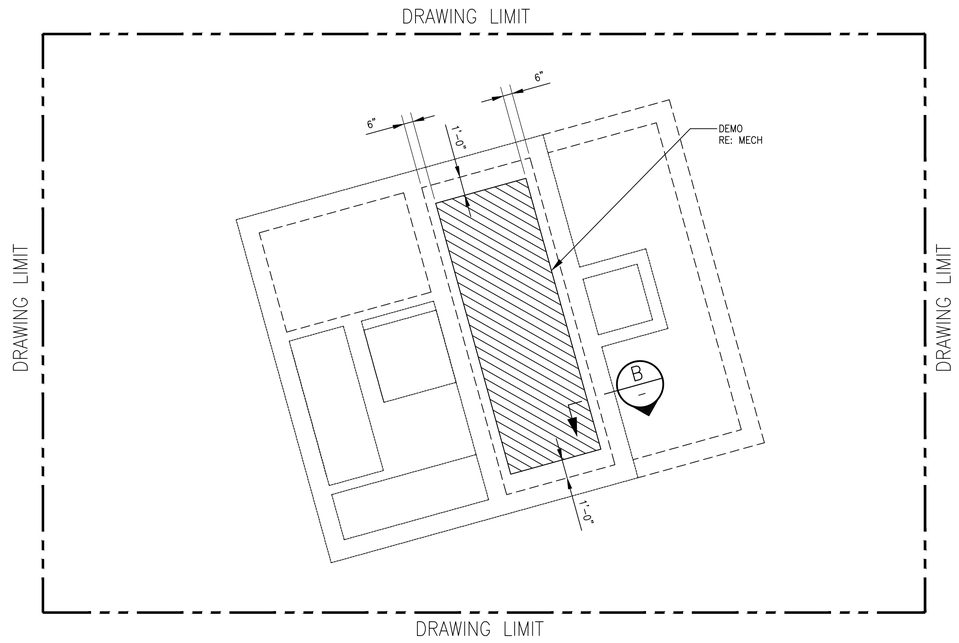

DEMO @ INTERMEDIATE PLAN
SCALE: 1"=10'

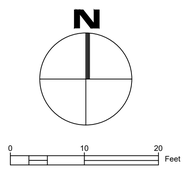

NO.	DATE	REVISION	APP.

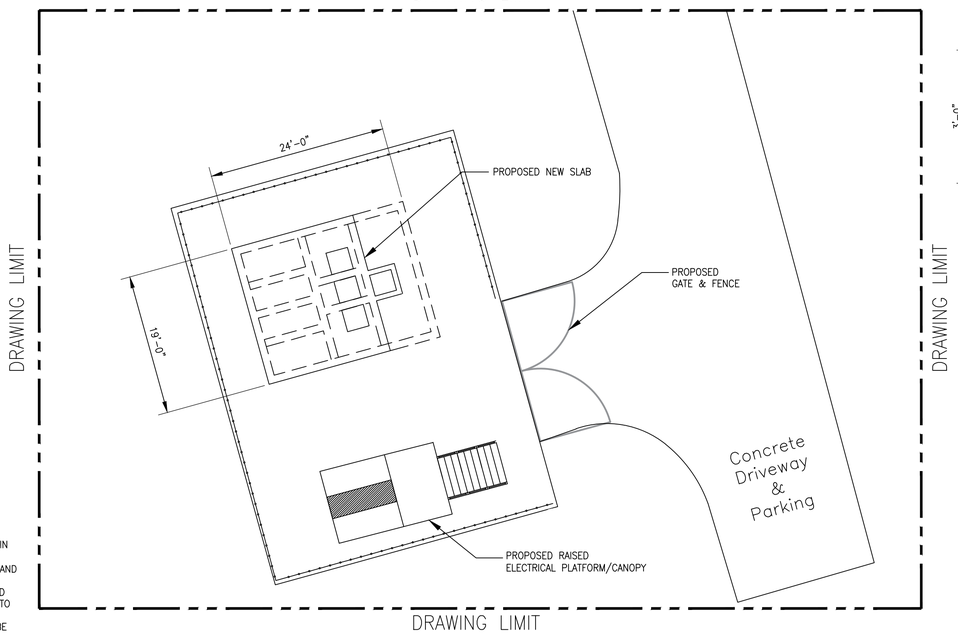

NEW PLAN LAYOUT
SCALE: 1"=10'

NOTE:

THE CITY SHALL HAVE THE FIRST RIGHT OF REFUSAL TO RETAIN OR SALVAGE ALL ITEMS SHOWN TO BE DEMOLISHED AND/OR REMOVED, INCLUDING BUT NOT LIMITED TO PUMPS, HATCHES, AND ELECTRICAL AND INSTRUMENTATION COMPONENTS. PRIOR TO INITIATING DEMO WORK, THE CONTRACTOR AND THE DESIGNATED FIELD INSPECTOR SHALL MAKE A JOINT INSPECTION OF EACH TO IDENTIFY ALL EQUIPMENT TO BE RETAINED BY THE CITY FOR SALVAGE AND REUSE. ITEMS IDENTIFIED FOR SALVAGE SHALL BE CAREFULLY REMOVED TO PROTECT FROM DAMAGE. ALL OTHER ITEMS SHOWN TO BE DEMOLISHED / REMOVED THAT ARE NOT RETAINED BY THE CITY SHALL BE PROPERLY REMOVED FROM THE SITE AND HANDLED PER SPECIFICATIONS AT NO ADDITIONAL COST TO THE CITY. CONTACT CITY DESIGNATED CITY REPRESENTATIVE FOR WASTEWATER TREATMENT PLANT SALVAGE AT LEAST 72 HOURS PRIOR TO DEMOLITION IN ORDER TO COORDINATE REMOVAL OF ANY ITEMS THE CITY WISHES TO CLAIM AND SALVAGE. THE CONTRACTOR SHALL DELIVER ALL SALVAGE ITEMS TO A LOCATION WITHIN THE CITY DETERMINED BY THE CITY.

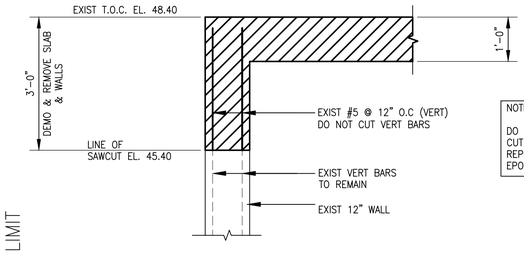

A: TYPICAL DEMO SECTION
SCALE: N.T.S

NOTE:

DO NOT CUT VERT. REBAR DURING WALL DEMO CUT OR DAMAGED EXIST VERT REBAR SHALL BE REPLACED WITH SAME SIZE REBAR, DRILLED AND EPOXIED INTO EXIST WALL.

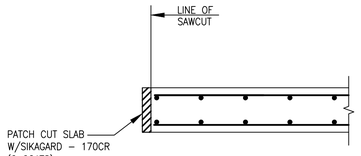

B: PATCH @ INTERMEDIATE SLAB CUT
SCALE: N.T.S

FCM Engineers, PC
3300 S. Gessner Rd. Suite 249
T- 713-706-4412
F- 713-706-4410
Tx Firm No. 13481

HATCH
750 TOWN & COUNTRY BLVD
SUITE 650
HOUSTON, TX 77024
P: 832-930-7670
TX FIRM NUMBER: F-314

SURVEYED BY:
AMANI ENGINEERING, INC
FB NO. P-6357

STATE OF TEXAS · CHARLES C.A. MOBEIKE · 73307 · LICENSED PROFESSIONAL ENGINEER
05/19/26

CITY OF HOUSTON
HOUSTON PUBLIC WORKS

LIFT STATION RENEWAL & REPLACEMENT PROJECT
BRAESWOOD N LIFT STATION PROPOSED DEMOLITION & STRUCTURAL PLAN

WBS NUMBER	FOR CITY OF HOUSTON USE ONLY
R-000267-0173-4	HOUSTON PUBLIC WORKS ACCEPTED AND FILED 82825 CITY DRAWING NUMBER Approval Date 08/14/26 HOUSTON TX
DRAWING SCALE	
AS NOTED	
CITY OF HOUSTON PM	
NUPUR KRISHNAN P.E. N.K.	
C1S04	SHEET NO. 14 OF 274

FILE PATH: C:\Users\francis.iheagwara\Desktop\FOI\Lift Station\CAD\MBK\Braeswood\FINAL\Braeswood Demo & Const.dwg

PLOT STYLE: Monochrome.ctb PLOTTED: 8/10/2026 8:09 PM

FILE PATH: C:\Users\francis.iheagwara\Desktop\FOI\Lift Station\CAD\MBK\Braeswood\FINAL\Braeswood New Slab.dwg

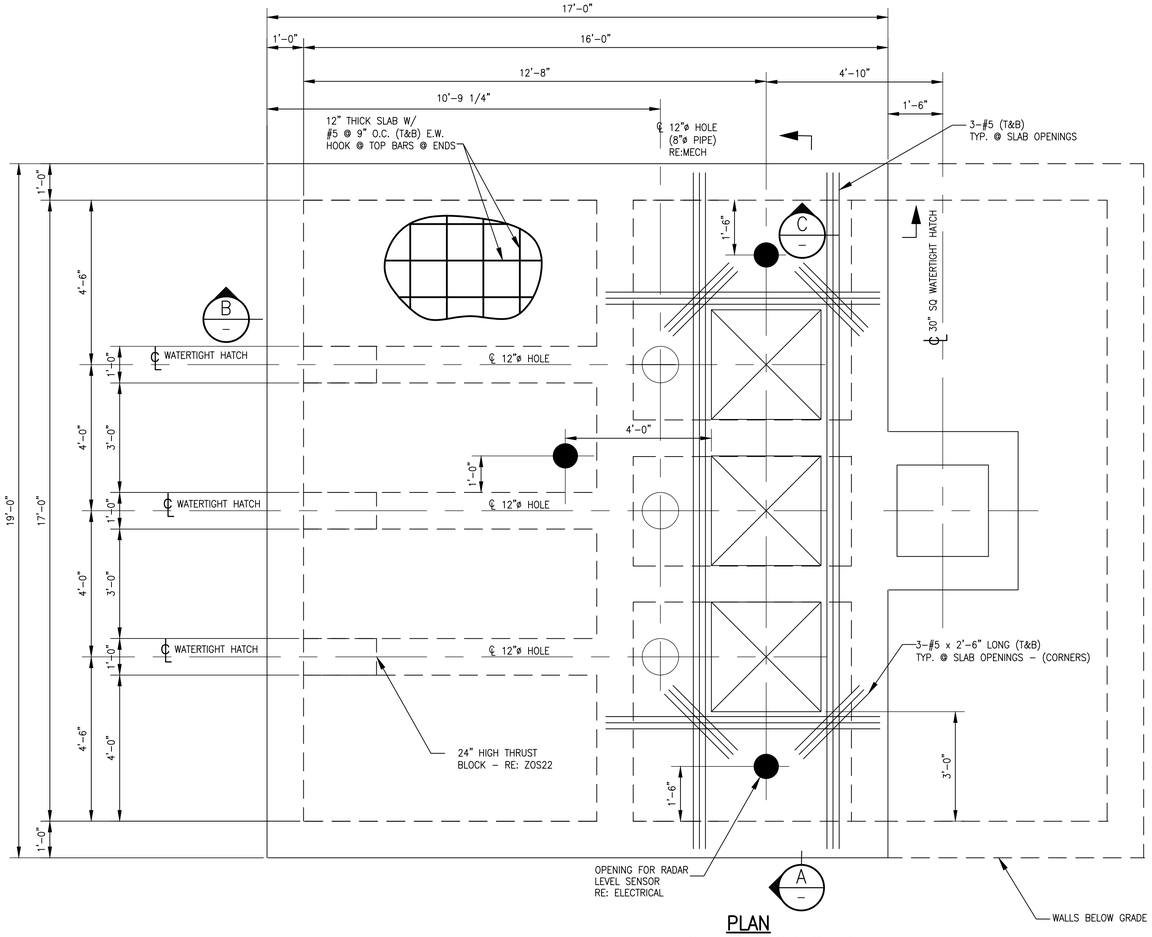

PLAN
LIFT STATION TOP SLAB
SCALE: 1/2" = 1'-0"

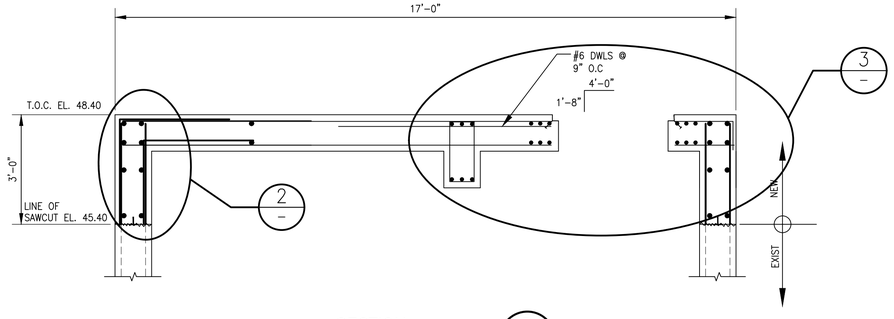

SECTION
SCALE: 1/2" = 1'-0" — B

NOTE:

1. REFER TO SHEET ZOS21 FOR STRUCTURAL GENERAL NOTES
2. REFER TO MECHANICAL/VENDOR DRAWINGS FOR WATERPROOF HATCHES/MANHOLES HATCHES SHALL BE SIZED PER PUMP MANUFACTURER AND SHALL BE FLUSHED WITH THE PROPOSED TOP SLAB
3. CONTRACTOR SHALL FIELD VERIFY AND COORDINATE ALL DIMENSION W/MEP & CIVIL PLANS PRIOR TO BIDDING WORK.
4. REFER TO ELECTRICAL FOR RADAR LEVEL SENSOR OPENINGS & MECHANICAL DRAWING FOR OTHER PIPE PENETRATIONS, CONDUITS, VENTS ETC.
5. REFER TO SPECS 09901 FOR WET WELL WALL CLEANING & COATING SPECS.
6. REFER TO COH STD DETAILS ZOS22, 23, 24, 25, 26.

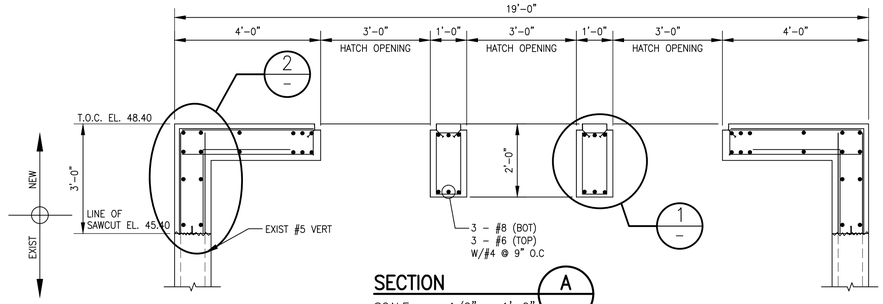

SECTION
SCALE: 1/2" = 1'-0" — A

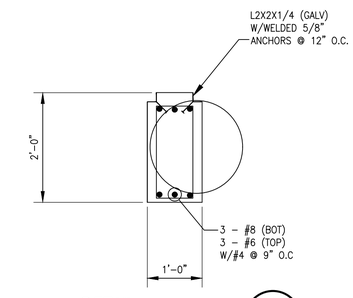

DETAIL
SCALE: 3/4" = 1'-0" — 1

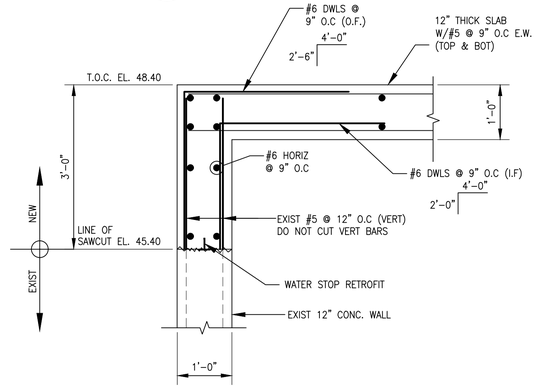

DETAIL
SCALE: 3/4" = 1'-0" — 2

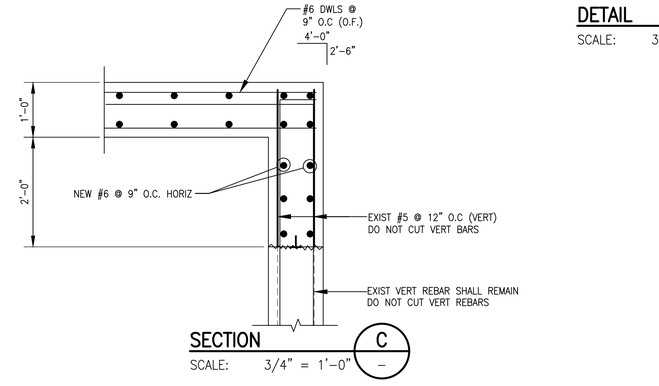

SECTION
SCALE: 3/4" = 1'-0" — C

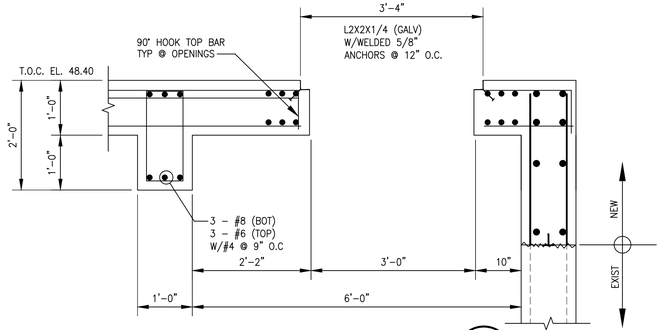

DETAIL
SCALE: 3/4" = 1'-0" — 3

NO.	DATE	REVISION	APP.

FCM Engineers, PC
3300 S. Gessner Rd. Suite 249
T- 713-706-4412
F- 713-706-4410
Tx Firm No. 13481

HATCH
750 TOWN & COUNTRY BLVD
SUITE 650
HOUSTON, TX 77024
P: 832-930-7670
TX FIRM NUMBER: F-314

STATE OF TEXAS
CHARLES C.A. MGBEIKE
73307
LICENSED PROFESSIONAL ENGINEER
05/19/26

SURVEYED BY:
AMANI ENGINEERING, INC
FB NO. P-6357

CITY OF HOUSTON
HOUSTON PUBLIC WORKS

LIFT STATION RENEWAL & REPLACEMENT PROJECT
BRAESWOOD N LIFT STATION
PROPOSED STRUCTURAL PLAN, SECTIONS & DETAILS

WBS NUMBER	FOR CITY OF HOUSTON USE ONLY
R-000267-0173-4	HOUSTON PUBLIC WORKS ACCEPTED AND FILED 82825 CITY DRAWING NUMBER Approval Date 08/14/26 HOUSTON TX
DRAWING SCALE	
AS NOTED	
CITY OF HOUSTON PM	
NUPUR KRISHNAN P.E. N.K.	
C1S05	SHEET NO. 15 OF 274

PLOTTED: 6/5/2026 4:29 PM
PLOT STYLE: Monochrome.ctb
FILE PATH: C:\Users\francis.iheagwara\Desktop\FOI\Lift Station\CAD\MBK\Braeswood\FINAL\ELEVATED ELECTRICAL CABINET PLTF FOUNDATION.dwg

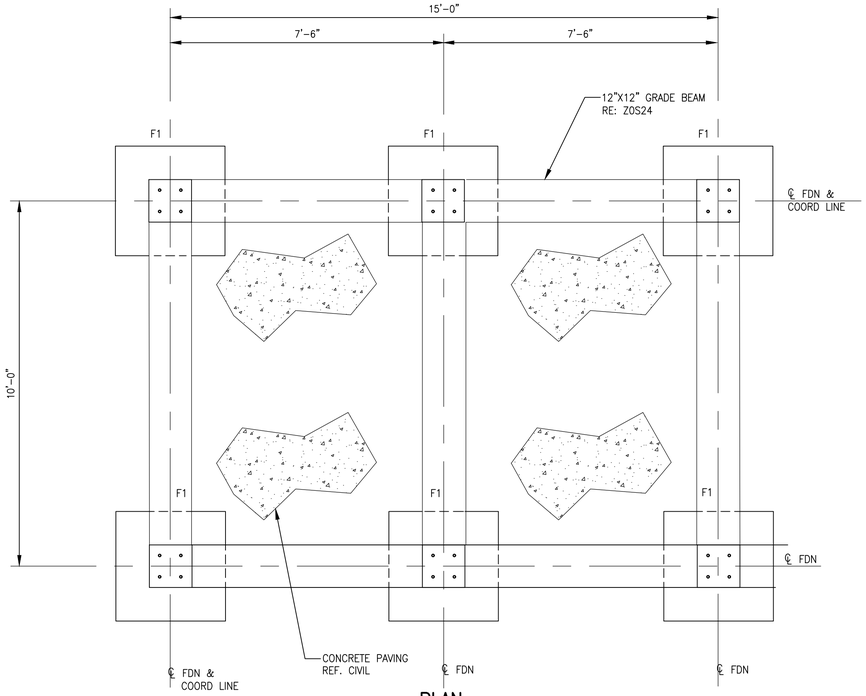

PLAN
PLATFORM FOUNDATION
SCALE: 1/2" = 1'-0"

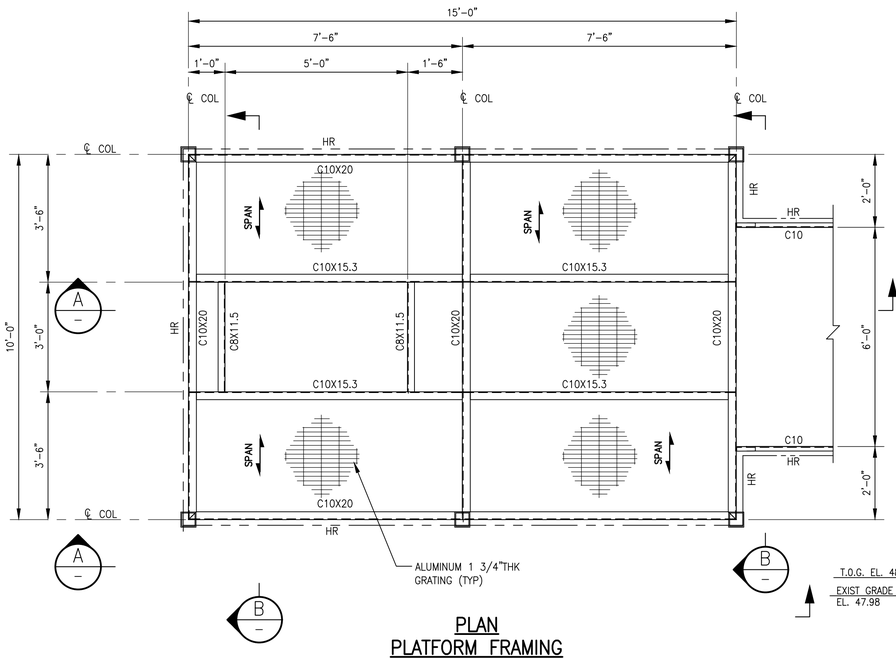

PLAN
PLATFORM FRAMING
(T.O. GRTG +1 3/4")
SCALE: 1/2" = 1'-0"

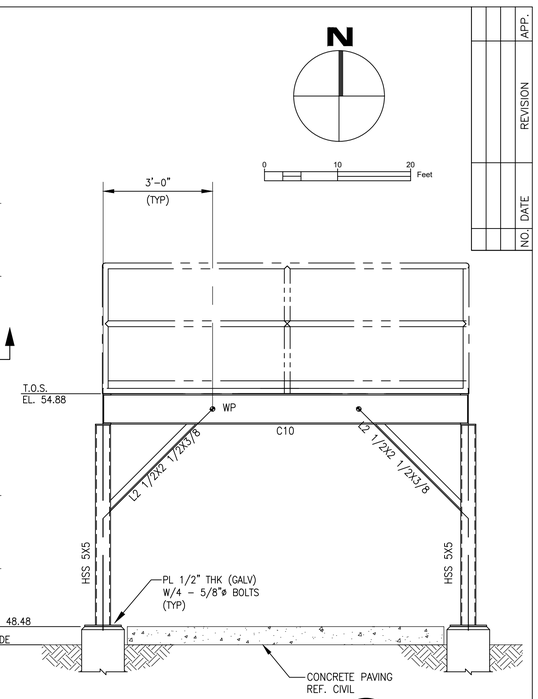

SECTION B
SCALE: 1/2" = 1'-0"

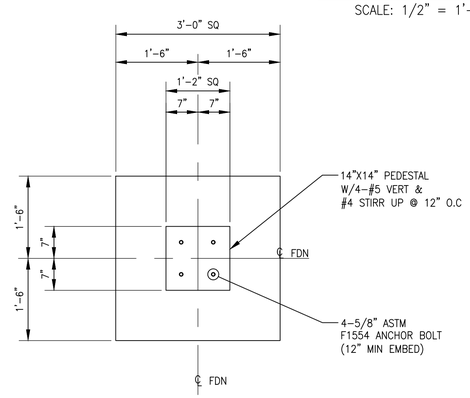

TYPICAL F1 FOUNDATION
SCALE: 3/4" = 1'-0"
(6 REQ'D)

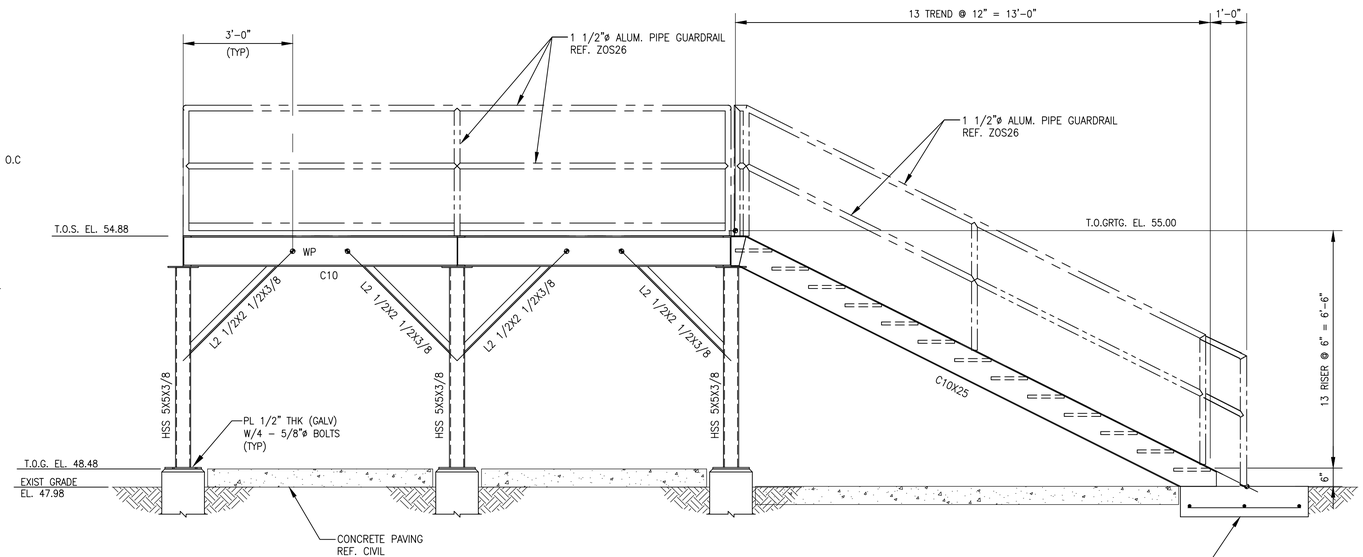

SECTION A
SCALE: 1/2" = 1'-0"

NOTE:

1. REFER TO SHEET ZOS21 FOR STRUCTURAL GENERAL NOTES
2. CONTRACTOR SHALL FIELD VERIFY AND COORDINATE ALL DIMENSIONS W/MEP & CIVIL PLANS PRIOR TO BIDDING WORK.
3. REFER TO COH STD DETAILS ZOS22, 23, 24, 25, 26.
4. ALL STRUCTURAL STEEL SHALL BE HOT DIPPED GALV.
5. ALL ALUM SHALL BE POWDER COATED DARK GREEN PER ZOS21.
6. ALL GRATING SHALL BE ALUMINUM.

GEOTECH DESIGN DATA

SOIL CLASSIFICATION: CH (CLAY & SILTY CLAY)
PLASTICITY INDEX: 31 TO 42
BEARING CAPACITY: 1500 PSF

NO.	DATE	REVISION	APP.

FCM Engineers, PC
3300 S. Gessner Rd. Suite 249
T- 713-706-4412
F- 713-706-4410
Tx Firm No. 13481

HATCH
750 TOWN & COUNTRY BLVD
SUITE 650
HOUSTON, TX 77024
P: 832-930-7670
TX FIRM NUMBER: F-314

SURVEYED BY:
AMANI ENGINEERING, INC
FB NO. P-6357

STATE OF TEXAS
CHARLES C.A. MOSEIKE
73307
LICENSED PROFESSIONAL ENGINEER
05/19/26

CITY OF HOUSTON
HOUSTON PUBLIC WORKS

LIFT STATION RENEWAL & REPLACEMENT PROJECT
BRAESWOOD N LIFT STATION
PROPOSED STRUCTURAL ELECTRICAL PLATFORM FOUNDATION & STEEL PLANS & SECTIONS

WBS NUMBER	FOR CITY OF HOUSTON USE ONLY
R-000267-0173-4	HOUSTON PUBLIC WORKS ACCEPTED AND FILED 82825 CITY DRAWING NUMBER Approval Date 08/14/26 HOUSTON TX
DRAWING SCALE	
AS NOTED	
CITY OF HOUSTON PM	
NUPUR KRISHNAN P.E. N.K.	

C1S06 | SHEET NO. 16 OF 274

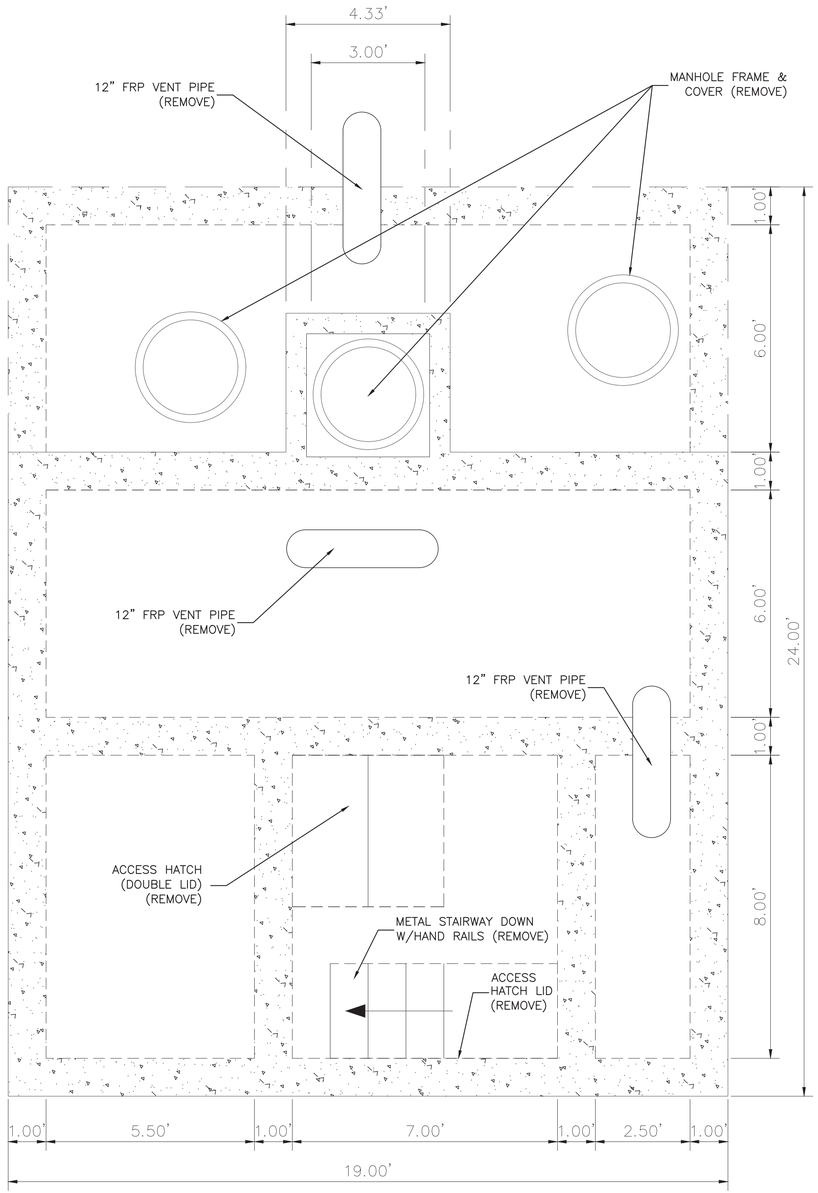

SURFACE PLAN VIEW

DEMOLITION NOTES:

1. THIS DRAWING IS BASED ON AVAILABLE RECORDS AND FIELD OBSERVATIONS. THE CONTRACTOR SHALL SATISFY HIMSELF / HERSELF OF THE ACTUAL CONDITIONS EXISTING AT THE SITE. THIS DRAWING DEPICTS PRIMARY MECHANICAL FEATURES. NOT ALL FEATURES, INCLUDING ELECTRICAL ARE NECESSARILY DEPICTED HEREON. THE CONTRACTOR SHALL BE RESPONSIBLE FOR REMOVING ALL EXISTING EQUIPMENT WITHIN THE EXISTING STRUCTURE AS A PRECURSOR TO CONSTRUCTION OF THE PROPOSED IMPROVEMENTS.
2. DEMOLISH AND REMOVE TOP AND SIDE WALLS OF LIFT STATION TO 2-FEET 6-INCHES BELOW LIFT STATION TOP SLAB ELEVATION. STEEL IN WALLS TO REMAIN (WHERE POSSIBLE) AND BE USED TO DEVELOP REINFORCEMENT FOR NEW TOP SLAB (REFER TO STRUCTURAL DETAILS).
3. THE CONTRACTOR SHALL NOT PROCEED WITH DEMOLITION WORK UNTIL AUTHORIZED. LIFT STATION BYPASS PUMPING MUST BE IN PLACE WITH OPERATIONAL ADEQUACY CHECKED AND CONFIRMED BY THE CITY BEFORE PROCEEDING WITH DEMOLITION WORK.
4. THE CONTRACTOR SHALL BE RESPONSIBLE FOR OBTAINING ANY PERMIT(S) REQUIRED FOR DEMOLITION WORK.
5. ALL ITEMS DAMAGED OR REMOVED BY THE CONTRACTOR AND NOT SPECIFICALLY DESIGNATED FOR DEMOLITION SHALL BE REPAIRED OR REPLACED BY THE CONTRACTOR AT NO COST TO THE CITY.
6. THE CONTRACTOR MAY DISCHARGE LIQUID WASTE AND WASH DOWN TO THE CITY WASTEWATER COLLECTION SYSTEM, HOWEVER; ALL DISCHARGES MUST BE COMPLIANT WITH THE CITY'S INDUSTRIAL WASTE ORDINANCE, CHAPTER 47, ARTICLE V. THE CONTRACTOR IS ADVISED THAT A PERMIT OR TEMPORARY DISCHARGE AUTHORIZATION MAY BE REQUIRED. CONTACT THE INDUSTRIAL WASTEWATER DIVISION AT (832) 395-5800. IN LIEU OF A DISCHARGE AUTHORIZATION, THE CONTRACTOR SHALL COLLECT AND HAUL, AT CONTRACTOR EXPENSE, ALL NON-SOLID DISCHARGES TO AN APPROVED CITY FACILITY.
7. REFER TO STRUCTURAL AND ELECTRICAL DEMOLITION DRAWINGS FOR INFORMATION RELATED TO THOSE SPECIFIC ACTIVITIES.
8. THE CITY OF HOUSTON WILL RETAIN SALVAGE RIGHTS TO ALL MATERIALS AND EQUIPMENT. FOR FURTHER INFORMATION, REFER TO SPECIFICATION SECTION 01110, PARAGRAPH 1.02.I.

THE CITY SHALL HAVE THE FIRST RIGHT OF REFUSAL TO RETAIN OR SALVAGE ALL ITEMS SHOWN TO BE DEMOLISHED AND/OR REMOVED, INCLUDING BUT NOT LIMITED TO PUMPS, HATCHES, AND ELECTRICAL AND INSTRUMENTATION COMPONENTS. PRIOR TO INITIATING DEMO WORK, THE CONTRACTOR AND THE DESIGNATED FIELD INSPECTOR SHALL MAKE A JOINT INSPECTION OF EACH SITE TO IDENTIFY ALL EQUIPMENT TO BE RETAINED BY THE CITY FOR SALVAGE AND REUSE. ITEMS IDENTIFIED FOR SALVAGE SHALL BE CAREFULLY REMOVED TO PROTECT FROM DAMAGE. ALL OTHER ITEMS SHOWN TO BE DEMOLISHED / REMOVED THAT ARE NOT RETAINED BY THE CITY SHALL BE PROPERLY REMOVED FROM THE SITE AND HANDLED PER SPECIFICATIONS AT N O ADDITIONAL COST TO THE CITY. CONTACT CITY DESIGNATED CITY REPRESENTATIVE FOR WASTEWATER TREATMENT PLANT SALVAGE AT LEAST 72 HOURS PRIOR TO DEMOLITION IN ORDER TO COORDINATE REMOVAL OF ANY ITEMS THE CITY WISHES TO CLAIM AND SALVAGE. THE CONTRACTOR SHALL DELIVER ALL SALVAGE ITEMS TO A LOCATION WITHIN THE CITY DETERMINED BY THE CITY.

AMANI ENGINEERING, INC.
11011 RICHMOND AVENUE
SUITE 700
HOUSTON, TEXAS 77024
TEL: (713) 270-5700
TBPE REG. NO. F-4528
TBPELS REG. NO. 1028200

HATCH
750 TOWN & COUNTRY BLVD.
SUITE 650
HOUSTON, TEXAS 77024
P:832-930-7670
TX FIRM NUMBER: F-314

SURVEYED BY:
AMANI ENGINEERING,INC.
FB NO. P-6357

STATE OF TEXAS
DAVID L. BROWN
48282
REGISTERED
PROFESSIONAL ENGINEER
8/11/2026

CITY OF HOUSTON
HOUSTON PUBLIC WORKS

LIFT STATION RENEWAL & REPLACEMENT PROJECT

BRAESWOOD N. LIFT STATION
EXISTING SURFACE PLAN VIEW
MECHANICAL DEMOLITION

WBS NUMBER	FOR CITY OF HOUSTON USE ONLY
R-000267-0173-4	HOUSTON PUBLIC WORKS ACCEPTED AND FILED 82825 CITY DRAWING NUMBER Approval Date 08/14/26 HOUSTON TX
DRAWING SCALE	
Scale 1"=2'	
CITY OF HOUSTON PM	
NUPUR KRISHNAN, PE N.K.	
E1M01	SHEET NO. 17 OF 274

FILE NAME:
PLOTTED ON:

0 1 2 3 ORIGINAL SCALE IN INCHES FOR REDUCED PLANS

P:\Coa\c\2024\24013 - Hatch - COH FY20 Lift Stations\CAD_DWG\LIFT STATIONS MECHANICAL DEMOLITION PLAN\S-BRAESWOOD\LS-BRAESWOODDEMOLITION 112025.dwg

THE CITY SHALL HAVE THE FIRST RIGHT OF REFUSAL TO RETAIN OR SALVAGE ALL ITEMS SHOWN TO BE DEMOLISHED AND/OR REMOVED, INCLUDING BUT NOT LIMITED TO PUMPS, HATCHES, AND ELECTRICAL AND INSTRUMENTATION COMPONENTS. PRIOR TO INITIATING DEMO WORK, THE CONTRACTOR AND THE DESIGNATED FIELD INSPECTOR SHALL MAKE A JOINT INSPECTION OF EACH SITE TO IDENTIFY ALL EQUIPMENT TO BE RETAINED BY THE CITY FOR SALVAGE AND REUSE. ITEMS IDENTIFIED FOR SALVAGE SHALL BE CAREFULLY REMOVED TO PROTECT FROM DAMAGE. ALL OTHER ITEMS SHOWN TO BE DEMOLISHED / REMOVED THAT ARE NOT RETAINED BY THE CITY SHALL BE PROPERLY REMOVED FROM THE SITE AND HANDLED PER SPECIFICATIONS AT N O ADDITIONAL COST TO THE CITY. CONTACT CITY DESIGNATED CITY REPRESENTATIVE FOR WASTEWATER TREATMENT PLANT SALVAGE AT LEAST 72 HOURS PRIOR TO DEMOLITION IN ORDER TO COORDINATE REMOVAL OF ANY ITEMS THE CITY WISHES TO CLAIM AND SALVAGE. THE CONTRACTOR SHALL DELIVER ALL SALVAGE ITEMS TO A LOCATION WITHIN THE CITY DETERMINED BY THE CITY.

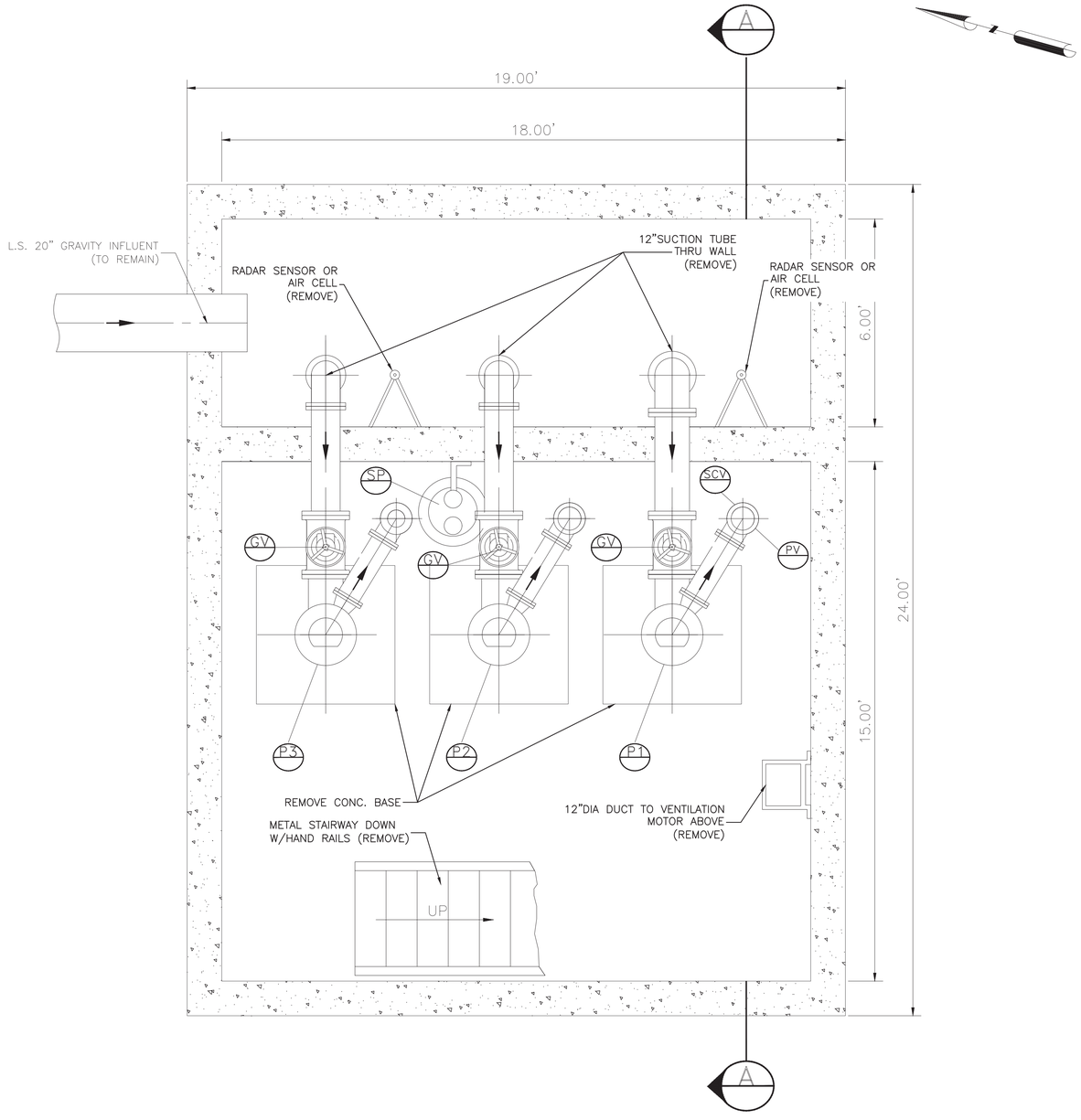

PUMP FLOOR PLAN
SECTION B–B

LEGEND

- SCV — 8"SWING CHECK VALVE (REMOVE)
- GV — KNIFE GATE VALVE (REMOVE)
- PV — 8" PLUG VALVE (REMOVE)
- P1 — PUMP FLYGT 3153 15hp (REMOVE)
- P2 — PUMP FLYGT 3153 15hp (REMOVE)
- P3 — PUMP FLYGT 3153 15hp (REMOVE)
- SP — SUMP PUMP (REMOVE)

AMANI ENGINEERING, INC.
11011 RICHMOND AVENUE
SUITE 700
HOUSTON, TEXAS 77024
TEL: (713) 270-5700
TBPE REG. NO. F-4528
TBPELS REG. NO. 1028200

HATCH
750 TOWN & COUNTRY BLVD.
SUITE 650
HOUSTON, TEXAS 77024
P:832-930-7670
TX FIRM NUMBER: F-314

SURVEYED BY:
AMANI ENGINEERING,INC.
FB NO. P-6357

STATE OF TEXAS
DAVID L. BROWN
48282
REGISTERED PROFESSIONAL ENGINEER
8/11/2026

CITY OF HOUSTON
HOUSTON PUBLIC WORKS

LIFT STATION RENEWAL & REPLACEMENT PROJECT

BRAESWOOD N, LIFT STATION
EXISTING PUMP FLOOR PLAN VIEW
MECHANICAL DEMOLITION

WBS NUMBER	FOR CITY OF HOUSTON USE ONLY
R-000267-0173-4	HOUSTON PUBLIC WORKS ACCEPTED AND FILED 82825 CITY DRAWING NUMBER Approval Date 08/14/26 HOUSTON TX
DRAWING SCALE	
Scale 1"=2'	
CITY OF HOUSTON PM	
NUPUR KRISHNAN, PE N.K.	
SHEET NO. 18 OF 274	

E1M02

0 1 2 3 ORIGINAL SCALE IN INCHES FOR REDUCED PLANS

FILE NAME:
PLOTTED ON:

P:\Cond\2024\24013 - Hatch - COH FY20 Lift Stations\CAD_DWG\LIFT STATIONS MECHANICAL DEMOLITION PLAN\S-BRAESWOODDEMOLITION 112025.dwg

THE CITY SHALL HAVE THE FIRST RIGHT OF REFUSAL TO RETAIN OR SALVAGE ALL ITEMS SHOWN TO BE DEMOLISHED AND/OR REMOVED, INCLUDING BUT NOT LIMITED TO PUMPS, HATCHES, AND ELECTRICAL AND INSTRUMENTATION COMPONENTS. PRIOR TO INITIATING DEMO WORK, THE CONTRACTOR AND THE DESIGNATED FIELD INSPECTOR SHALL MAKE A JOINT INSPECTION OF EACH SITE TO IDENTIFY ALL EQUIPMENT TO BE RETAINED BY THE CITY FOR SALVAGE AND REUSE. ITEMS IDENTIFIED FOR SALVAGE SHALL BE CAREFULLY REMOVED TO PROTECT FROM DAMAGE. ALL OTHER ITEMS SHOWN TO BE DEMOLISHED / REMOVED THAT ARE NOT RETAINED BY THE CITY SHALL BE PROPERLY REMOVED FROM THE SITE AND HANDLED PER SPECIFICATIONS AT N O ADDITIONAL COST TO THE CITY. CONTACT CITY DESIGNATED CITY REPRESENTATIVE FOR WASTEWATER TREATMENT PLANT SALVAGE AT LEAST 72 HOURS PRIOR TO DEMOLITION IN ORDER TO COORDINATE REMOVAL OF ANY ITEMS THE CITY WISHES TO CLAIM AND SALVAGE. THE CONTRACTOR SHALL DELIVER ALL SALVAGE ITEMS TO A LOCATION WITHIN THE CITY DETERMINED BY THE CITY.

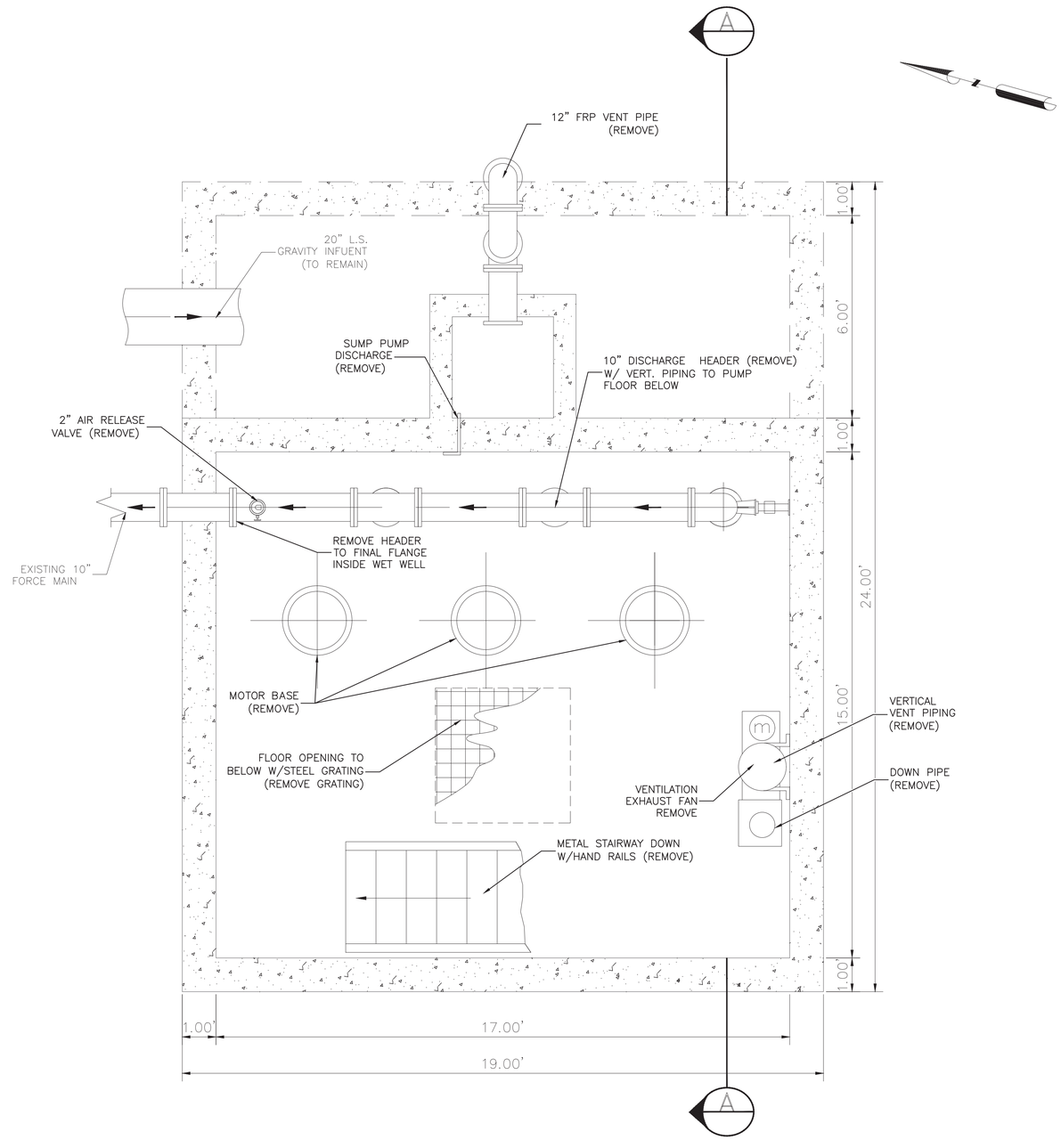

INTERMEDIATE FLOOR PLAN

SECTION C–C

AMANI ENGINEERING, INC.
11011 RICHMOND AVENUE
SUITE 700
HOUSTON, TEXAS 77024
TEL: (713) 270-5700
TBPE REG. NO. F-4528
TBPELS REG. NO. 1028200

HATCH
750 TOWN & COUNTRY BLVD.
SUITE 650
HOUSTON, TEXAS 77024
P:832-930-7670
TX FIRM NUMBER: F-314

SURVEYED BY:
AMANI ENGINEERING,INC.
FB NO. P-6357

STATE OF TEXAS
DAVID L. BROWN
48282
REGISTERED PROFESSIONAL ENGINEER
8/11/2026

CITY OF HOUSTON

HOUSTON PUBLIC WORKS

LIFT STATION RENEWAL & REPLACEMENT PROJECT

BRAESWOOD N, LIFT STATION
EXISTING INTERMEDIATE FLOOR PLAN VIEW
MECHANICAL DEMOLITION

WBS NUMBER	FOR CITY OF HOUSTON USE ONLY
R-000267-0173-4	HOUSTON PUBLIC WORKS ACCEPTED AND FILED 82825 CITY DRAWING NUMBER Approval Date 08/14/26 HOUSTON TX
DRAWING SCALE	
Scale 1"=2'	
CITY OF HOUSTON PM	
NUPUR KRISHNAN, PE N.K.	
SHEET NO. 19 OF 274	

E1M03

P:\Cad\2024\24013 - Hatch - COH FY20 Lift Stations\CAD_DWG\LIFT STATIONS MECHANICAL DEMOLITION PLAN\S-BRAESWOODDEMOLITION 112025.dwg

0 1 2 3 ORIGINAL SCALE IN INCHES FOR REDUCED PLANS

FILE NAME:
PLOTTED ON:

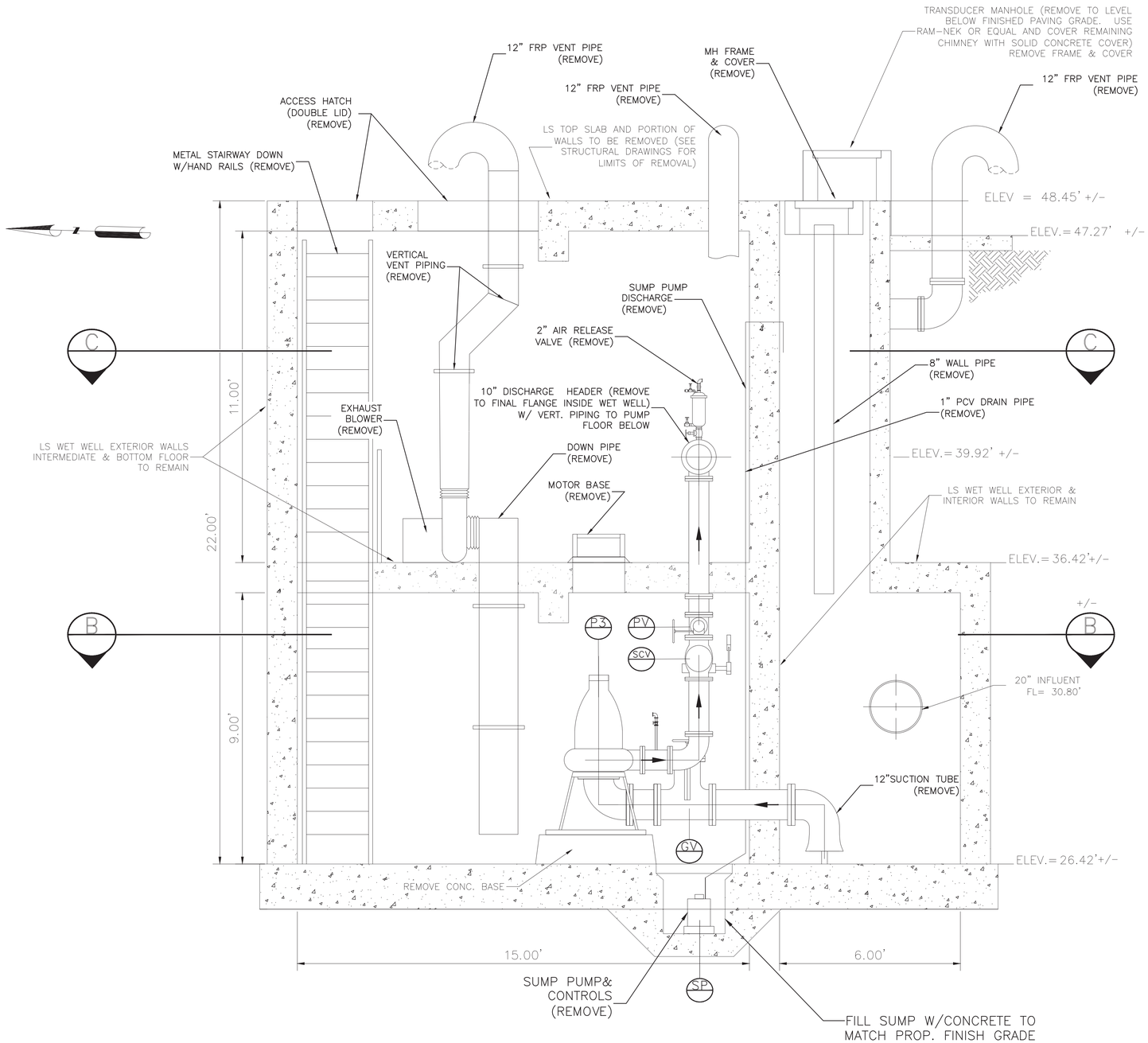

LIFT STATION SECTION VIEW

SECTION A-A

THE CITY SHALL HAVE THE FIRST RIGHT OF REFUSAL TO RETAIN OR SALVAGE ALL ITEMS SHOWN TO BE DEMOLISHED AND/OR REMOVED, INCLUDING BUT NOT LIMITED TO PUMPS, HATCHES, AND ELECTRICAL AND INSTRUMENTATION COMPONENTS. PRIOR TO INITIATING DEMO WORK, THE CONTRACTOR AND THE DESIGNATED FIELD INSPECTOR SHALL MAKE A JOINT INSPECTION OF EACH SITE TO IDENTIFY ALL EQUIPMENT TO BE RETAINED BY THE CITY FOR SALVAGE AND REUSE. ITEMS IDENTIFIED FOR SALVAGE SHALL BE CAREFULLY REMOVED TO PROTECT FROM DAMAGE. ALL OTHER ITEMS SHOWN TO BE DEMOLISHED / REMOVED THAT ARE NOT RETAINED BY THE CITY SHALL BE PROPERLY REMOVED FROM THE SITE AND HANDLED PER SPECIFICATIONS AT N O ADDITIONAL COST TO THE CITY. CONTACT CITY DESIGNATED CITY REPRESENTATIVE FOR WASTEWATER TREATMENT PLANT SALVAGE AT LEAST 72 HOURS PRIOR TO DEMOLITION IN ORDER TO COORDINATE REMOVAL OF ANY ITEMS THE CITY WISHES TO CLAIM AND SALVAGE. THE CONTRACTOR SHALL DELIVER ALL SALVAGE ITEMS TO A LOCATION WITHIN THE CITY DETERMINED BY THE CITY.

LEGEND

- SCV — 8"SWING CHECK VALVE (REMOVE)
- GV — KNIFE GATE VALVE (REMOVE)
- PV — 8" PLUG VALVE (REMOVE)
- P1 — PUMP FLYGT 3153 15hp (REMOVE)
- P2 — PUMP FLYGT 3153 15hp (REMOVE)
- P3 — PUMP FLYGT 3153 15hp (REMOVE)
- SP — SUMP PUMP (REMOVE)

AMANI ENGINEERING, INC.
11011 RICHMOND AVENUE
SUITE 700
HOUSTON, TEXAS 77024
TEL: (713) 270-5700
TBPE REG. NO. F-4528
TBPELS REG. NO. 1028200

HATCH
750 TOWN & COUNTRY BLVD.
SUITE 650
HOUSTON, TEXAS 77024
P:832-930-7670
TX FIRM NUMBER: F-314

SURVEYED BY:
AMANI ENGINEERING,INC.
FB NO. P-6357

STATE OF TEXAS
DAVID L. BROWN
48282
REGISTERED
PROFESSIONAL
8/11/2026

CITY OF HOUSTON
HOUSTON PUBLIC WORKS

LIFT STATION RENEWAL & REPLACEMENT PROJECT

BRAESWOOD N. LIFT STATION
EXISTING SECTION VIEW
MECHANICAL DEMOLITION

WBS NUMBER	FOR CITY OF HOUSTON USE ONLY
R-000267-0173-4	HOUSTON PUBLIC WORKS ACCEPTED AND FILED 82825 CITY DRAWING NUMBER Approval Date 08/14/26 HOUSTON TX
DRAWING SCALE	
Scale 1"=2'	
CITY OF HOUSTON PM	
NUPUR KRISHNAN, PE N.K.	
SHEET NO. 20 OF 274	

E1M04

FILE NAME:
PLOTTED ON:

0 1 2 3 ORIGINAL SCALE IN INCHES FOR REDUCED PLANS

P:\Coord\2024\24013 - Hatch - COH FY20 Lift Stations\CAD_DWG\LIFT STATIONS MECHANICAL DEMOLITION PLAN\S-BRAESWOOD\S-BRAESWOODDEMOLITION 112025.dwg

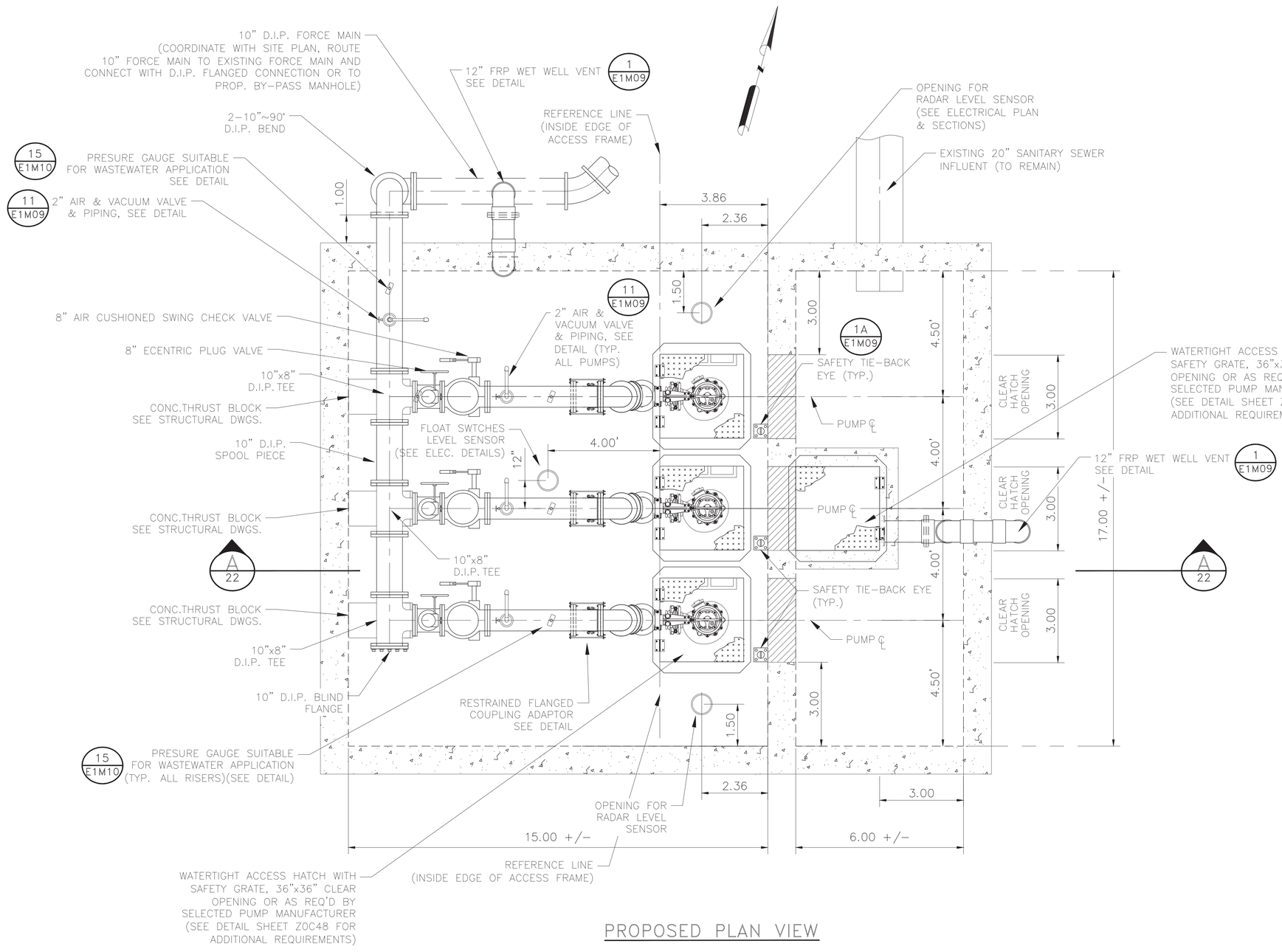

PROPOSED PLAN VIEW

NOTES:

1. CONTRACTOR TO VERIFY DIMENSIONS REQUIRED TO INSTALL AND OPERATE VALVES.
2. SEE DETAIL AND STRUCTURAL DRAWINGS FOR DIMENSIONS AND INFORMATION NOT SHOWN.
3. CONTRACTOR TO CONFIRM SIZE AND LOCATION OF THE WET WELL HATCHES PER HATCH AND PUMP MANUFACTURER'S REQUIREMENTS.
4. PUMP AND ANCHOR BOLTS ARE TO BE ADHESIVE TYPE, AND EMBEDDED IN THE CONCRETE SLAB. CONTRACTOR TO SUBMIT DESIGN OF PUMP ANCHOR BOLTS AND PATTERN, INCLUDING CALCULATIONS, DURING SHOP DRAWING SUBMISSION.
5. CONTRACTOR TO PROVIDE ADHESIVE ANCHORS IN LIEU OF WEDGE ANCHORS FOR ALL SUBMERGED CONDITIONS AND SUBMIT DESIGN OF ANCHOR BOLTS DURING SHOP DRAWING SUBMISSION.
6. ALL PIPING IN THE WET WELL SHALL BE FLANGED. NO FLANGED COUPLING ADAPTORS, OR VICTAULIC STYLE COUPLINGS SHALL BE PERMITTED INSIDE OF THE WET WELL.
7. INSTALL PLUG VALVES TO OPEN UPWARD AND TO CLOSE TO A SEATING POSITION.
8. INSTALL CHECK VALVES SO THAT THE WEIGHT LEVER POSITION IS APPROXIMATELY 45° BELOW THE VALVE HORIZONTAL CENTER LINE IN THE CLOSE POSITION: AND APPROXIMATELY 45° ABOVE THE HORIZONTAL CENTER LINE IN THE FULL OPEN POSITION.
9. THE ACCESS HATCHES MUST BE WATERTIGHT AND PAINTED FOREST GREEN. THE SAFETY GRATING MUST BE PROVIDED WITH A SAFETY ORANGE POWDER COAT FINISH. COATING REQUIREMENTS SHALL BE IN COMPLIANCE WITH SPECIFICATION REQUIREMENTS.
10. LABEL HATCHES WITH THE CORRESPONDING PUMP NUMBER AND CHECK VALVES WITH THE CORRESPONDING VALVE NUMBER USING A 12-INCH BY 12-INCH PLATE ENGRAVED WITH 6-INCH LETTERING WELDED TO THE HATCHES AND ADHERED TO THE VALVES.
11. COATINGS ARE REQUIRED BY THE CITY OF HOUSTON ON ALL VENT PIPES. COATINGS SHALL COMPLY WITH SPECIFICATIONS 02083, PARAGRAPH 2.11.C.4 AND 09901, PARAGRAPH 2.02.G.
12. PRESSURE GAUGES SHALL BE SUITABLE FOR WASTEWATER APPLICATIONS.
13. APPLY PROTECTIVE COATINGS TO PIPES, VALVES AND FITTINGS AS APPLICABLE. LABEL PIPING WITH DIRECTIONAL FLOW ARROWS IN COMPLIANCE WITH SPECIFICATION REQUIREMENTS
14. AIR RELEASE AND AIR VACUUM VALVES TO BE PROVIDED WITH STAINLESS STEEL BODIES IN COMPLIANCE WITH SPECIFICATION REQUIREMENTS.

NO.	DATE	REVISION	APP.

AMANI ENGINEERING, INC.
11011 RICHMOND AVENUE
SUITE 700
HOUSTON, TEXAS 77024
TEL: (713) 270-5700
TBPE REG. NO. F-4528
TBPELS REG. NO. 1028200

HATCH
750 TOWN & COUNTRY BLVD.
SUITE 650
HOUSTON, TEXAS 77024
P:832-930-7670
TX FIRM NUMBER: F-314

SURVEYED BY:
AMANI ENGINEERING,INC.
FB NO. P-6357

STATE OF TEXAS
DAVID L. BROWN
48282
REGISTERED
PROFESSIONAL
LAND SURVEYOR
8/11/2026

CITY OF HOUSTON
HOUSTON PUBLIC WORKS

LIFT STATION RENEWAL & REPLACEMENT PROJECT

BRAESWOOD N. LIFT STATION
PROPOSED MECHANICAL PLAN VIEW

WBS NUMBER
R-000267-0173-4
DRAWING SCALE
Scale 1"=2'
CITY OF HOUSTON PM
N.K. NUPUR KRISHNAN, PE

FOR CITY OF HOUSTON USE ONLY

HOUSTON PUBLIC WORKS
ACCEPTED AND FILED
82825
CITY DRAWING NUMBER
Approval Date 08/14/26
HOUSTON TX

E1M05 | SHEET NO. 21 OF 274

0 1 2 3 ORIGINAL SCALE IN INCHES FOR REDUCED PLANS

FILE NAME:
PLOTTED ON:

P:\Cad\2024\24013 - Hatch - COH FY20 Lift Stations\CAD_DWG\Phase II\4-Phase II BRAESWOOD\Phase II LS- BRAESWOOD.dwg

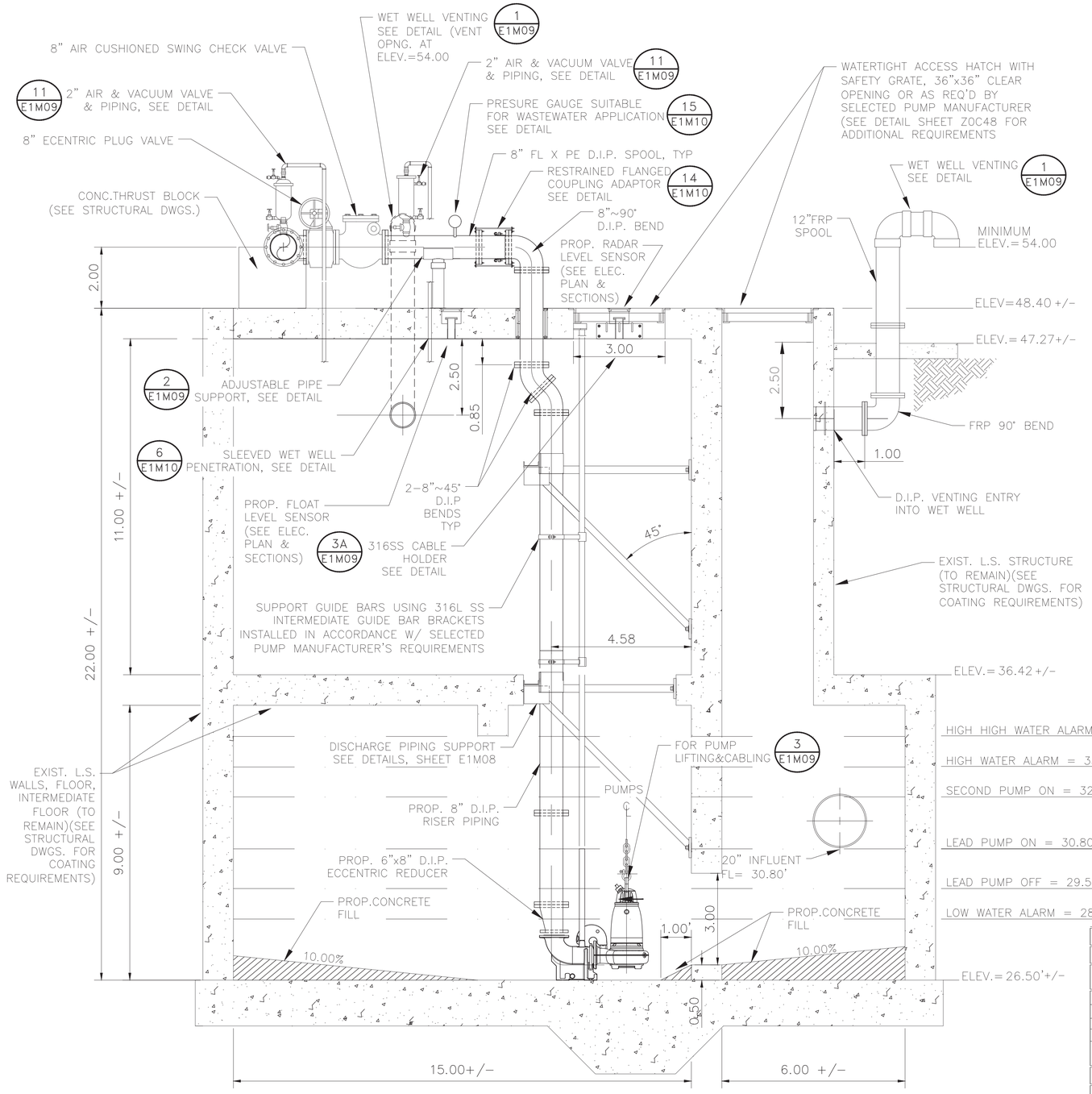

PROPOSED ELEVATION VIEW (SECTION A-A)

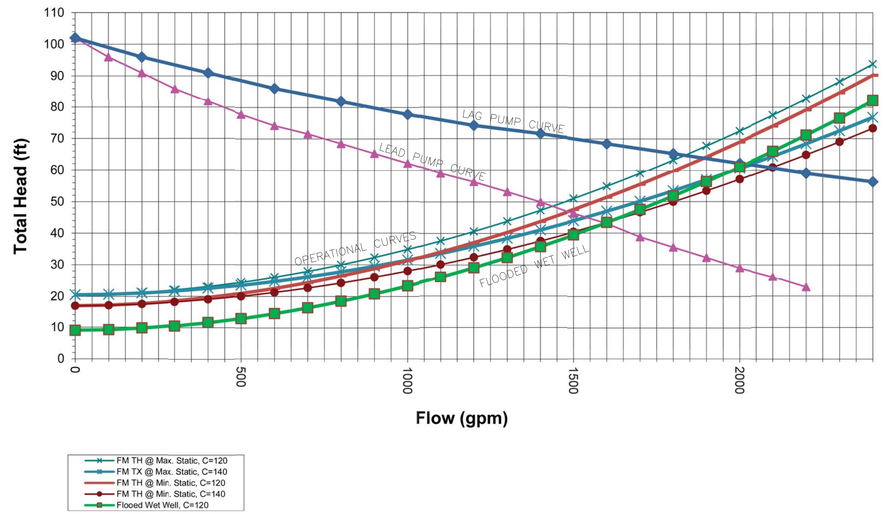

PUMP DATA TABLE

PUMP CHARACTERISTICS	PUMP NO. 1	PUMP NO. 2	PUMP NO. 3
MOTOR DATA NOMINAL SIZE (HP) MAX SPEED (RPM)	 25 1755	 25 1755	 25 1755
SOLIDS PASSAGE MIN SPHERE (IN)	 3	 3	 3
CAPACITY (GPM) DESIGN RUNOUT	 1440 2400	 1440 2400	 1440 2400
DISCHARGE HEAD (FT) DESIGN RUNOUT SHUT OFF	 58 25 101	 58 25 101	 58 25 101
EFFICIENCY (%) DESIGN	 78	 78	 78
NPSHR (FT) DESIGN RUNOUT	 24 53	 24 53	 24 53
PUMP CYCLE TIME	6+	6+	6+
CUMULATIVE CAPACITY* (GPM)	1440	1900	STANDBY

* CUMMULATIVE CAPACITY IS THE DUTY POINT WHEN ALL PUMPS IN THE OPERATIONAL CYCLE ARE BEING CALLED.

NOTE: ALL PUMPS TO BE PROVIDED WITH COOLING JACKETS TO ALLOW LOWERING WET WELL LEVEL TO "ALL PUMPS OFF" SETTING

STATION OPERATION TABLES

RISING LEVEL CYCLE

WATER LEVEL DEPTH	WATER LEVEL ELEVATION	ACTION	PUMP(S) IN OPERATION
3.00	29.50	PUMPS OFF LEVEL – NO ACTION	ALL PUMPS ARE OFF
4.30	30.80	LEAD PUMP TURNS ON	LEAD PUMP ON
6.00	32.50	SECOND PUMP TURNS ON	LEAD AND SECOND PUMPS ON
7.00	33.50	HIGH WATER ALARM ON	HIGH WATER ALARM SOUND
8.00	34.50	HIGH HIGH WATER ALARM (FLOAT ON LEVEL)	FIRM PUMPS ON (FLOATS ON LEVEL)

FALLING LEVEL CYCLE

WATER LEVEL DEPTH	WATER LEVEL ELEVATION	ACTION	PUMP(S) IN OPERATION
7.00	33.50	HIGH WATER LEVEL ALARM OFF	FIRM PUMPS ON
4.30	30.80	LEAD PUMP TURNS OFF (FLOAT OFF LEVEL)	LEAD PUMP OFF / SECOND PUMP ON (FLOAT OFF LEVEL)
3.00	29.50	SECOND PUMP TURNS OFF	ALL PUMPS OFF – STANDBY PUMP SWITCHES TO LEAD PUMP
2.00	28.50	LOW LEVEL ALARM	–

NO.	DATE	REVISION	APP.

AMANI ENGINEERING, INC.
11011 RICHMOND AVENUE
SUITE 700
HOUSTON, TEXAS 77024
TEL: (713) 270-5700
TBPE REG. NO. F-4528
TBPELS REG. NO. 1028200

HATCH
750 TOWN & COUNTRY BLVD.
SUITE 650
HOUSTON, TEXAS 77024
P:832-930-7670
TX FIRM NUMBER: F-314

SURVEYED BY:
AMANI ENGINEERING,INC.
FB NO. P-6357

STATE OF TEXAS
DAVID L. BROWN
48282
REGISTERED
PROFESSIONAL
LAND SURVEYOR
8/11/2026

CITY OF HOUSTON
HOUSTON PUBLIC WORKS

LIFT STATION RENEWAL & REPLACEMENT PROJECT

BRAESWOOD N. LIFT STATION
PROPOSED MECHANICAL
ELEVATION SECTION

WBS NUMBER	R-000267-0173-4
DRAWING SCALE	Scale 1"=2'
CITY OF HOUSTON PM	N.K. NUPUR KRISHNAN, PE

FOR CITY OF HOUSTON USE ONLY

HOUSTON PUBLIC WORKS
ACCEPTED AND FILED
82825
CITY DRAWING NUMBER
Approval Date 08/14/26
HOUSTON TX

E1M06
SHEET NO. 22 OF 274

FILE NAME:
PLOTTED ON:

0 1 2 3 ORIGINAL SCALE IN INCHES FOR REDUCED PLANS

P:\Cadd\2024\24013 - Hatch - COH FY26 Lift Stations\CAD_DWG\Phase IV\4-Phase II BRAESWOOD\Phase II LS- BRAESWOOD.dwg

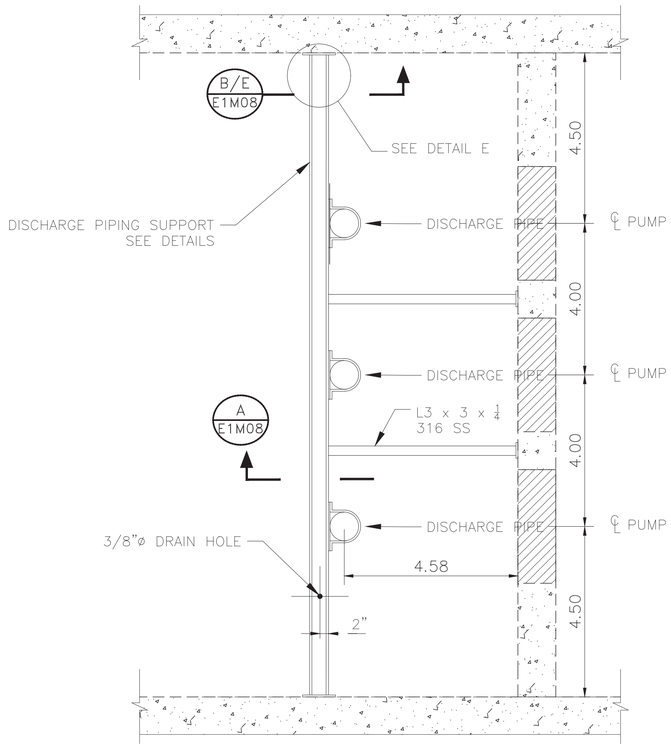

TYP DISCHARGE PIPING SUPPORT

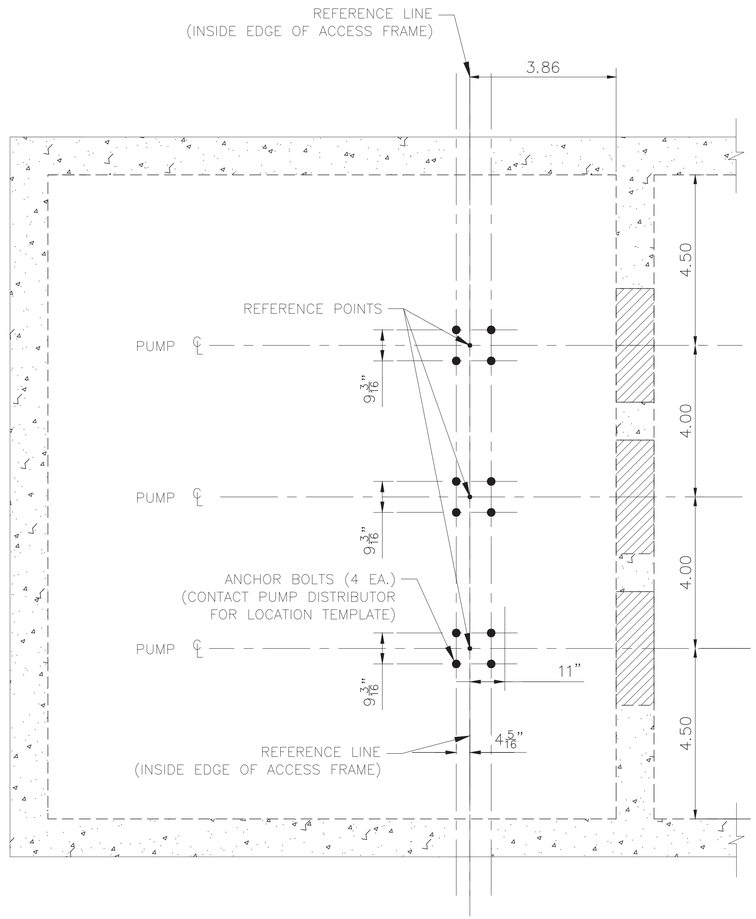

BASE SECTION

NO.	DATE	REVISION	APP.

AMANI ENGINEERING, INC.
11011 RICHMOND AVENUE
SUITE 700
HOUSTON, TEXAS 77024
TEL: (713) 270-5700
TBPE REG. NO. F-4528
TBPELS REG. NO. 1028200

HATCH
750 TOWN & COUNTRY BLVD.
SUITE 650
HOUSTON, TEXAS 77024
P:832-930-7670
TX FIRM NUMBER: F-314

SURVEYED BY:
AMANI ENGINEERING,INC.
FB NO. P-6357

STATE OF TEXAS
DAVID L. BROWN
48282
REGISTERED
PROFESSIONAL
LAND SURVEYOR
8/11/2026

CITY OF HOUSTON
HOUSTON PUBLIC WORKS

LIFT STATION RENEWAL & REPLACEMENT PROJECT

BRAESWOOD N. LIFT STATION
PROPOSED TOP VIEW/BASE SECTION

WBS NUMBER	FOR CITY OF HOUSTON USE ONLY
R-000267-0173-4	HOUSTON PUBLIC WORKS ACCEPTED AND FILED 82825 CITY DRAWING NUMBER Approval Date 08/14/26 HOUSTON TX
DRAWING SCALE	
Scale 1"=2'	
CITY OF HOUSTON PM	
N.K. NUPUR KRISHNAN, PE	
SHEET NO. 23 OF 274	

E1M07

0 1 2 3 ORIGINAL SCALE IN INCHES FOR REDUCED PLANS

FILE NAME:
PLOTTED ON:

P:\Cadd\2024\24013 - Hatch - COH FY20 Lift Stations\CAD_DWG\Phase IIX4-Phase II BRAESWOOD\Phase II LS- BRAESWOOD.dwg

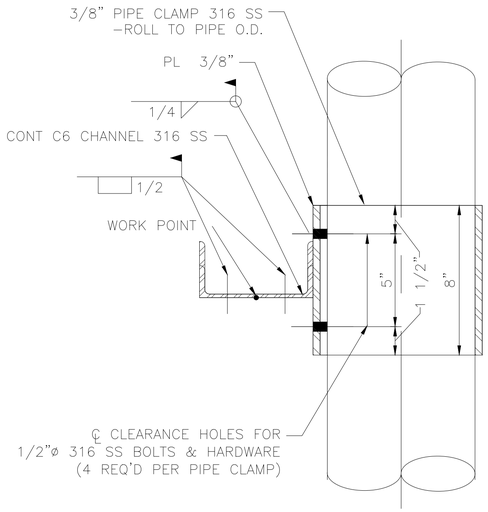

FRAME CONNECTION
DETAIL(1)
N.T.S.

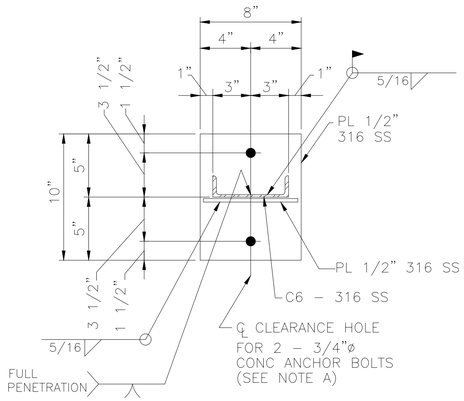

SECTION 'B'
N.T.S.

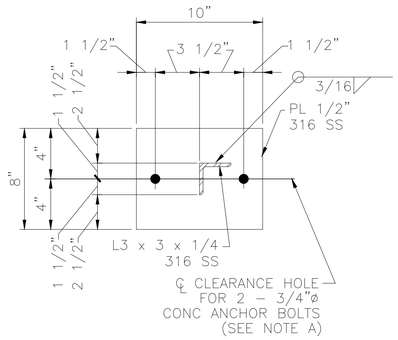

SECTION 'C'
N.T.S.

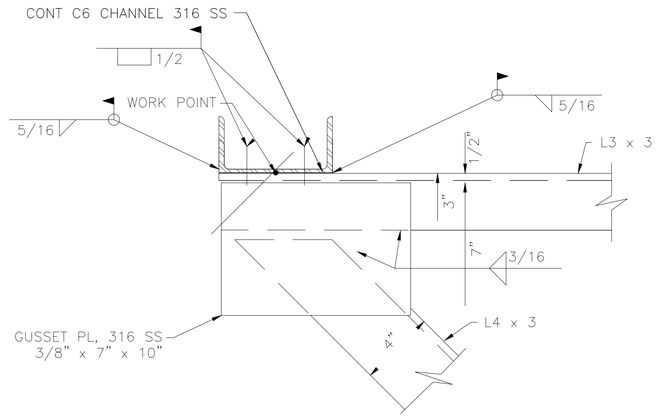

FRAME CONNECTION
DETAIL(2)
N.T.S.

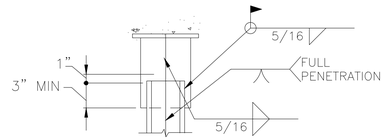

DETAIL 'E'
N.T.S.

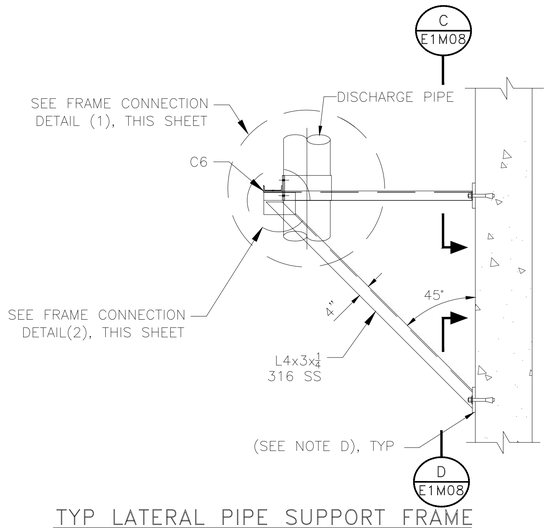

TYP LATERAL PIPE SUPPORT FRAME
N.T.S.

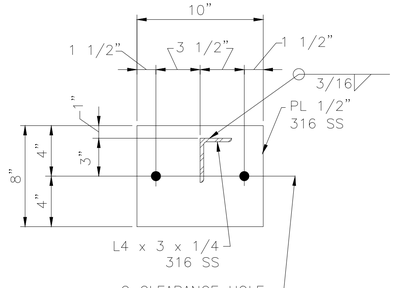

SECTION 'D'
N.T.S.

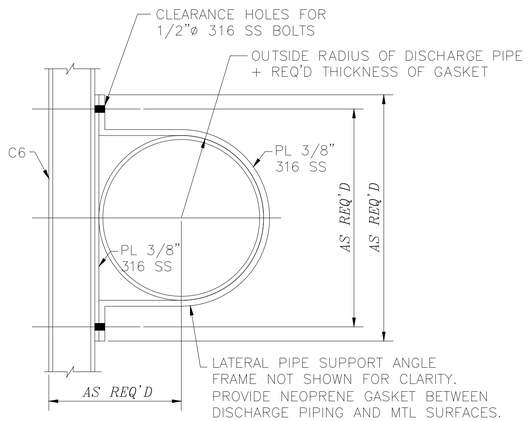

PIPE CLAMP DETAIL
N.T.S.

NOTES:

A. CONCRETE ANCHOR BOLTS SHALL HAVE 6" MINIMUM EMBEDMENT AND SHALL BE TYPE 316 STAINLESS STEEL, PER SPECIFICATIONS.

B. SEE STATION AND STRUCTURAL DRAWINGS FOR DIMENSIONS AND INFORMATION NOT SHOWN.

C. DRILL 3/8"ø HOLES, 1" OFF CENGER OF C6 AT MIDSPAN BETWEEN LATERAL PIPE SUPPORTS TO ALLOW FOR DRAINAGE. 3 HOLES PER CHANNEL WHERE 2 LATERAL SUPPORTS REQUIRED; 2 HOLES PER CHANNEL WHERE 1 LATERAL SUPPORT REQUIRED.

D. SET 1/4" NEOPRENE GASKET ON WALL SURFACE IN SIKA 1A (OR EQUAL) SEALANT.

NO.	DATE	REVISION	APP.

AMANI ENGINEERING, INC.
11011 RICHMOND AVENUE
SUITE 700
HOUSTON, TEXAS 77024
TEL: (713) 270-5700
TBPE REG. NO. F-4528
TBPELS REG. NO. 1028200

HATCH
750 TOWN & COUNTRY BLVD.
SUITE 650
HOUSTON, TEXAS 77024
P:832-930-7670
TX FIRM NUMBER: F-314

SURVEYED BY:
AMANI ENGINEERING,INC.
FB NO. P-6357

STATE OF TEXAS
DAVID L. BROWN
48282
REGISTERED
PROFESSIONAL
LAND SURVEYOR
8/11/2026

CITY OF HOUSTON
HOUSTON PUBLIC WORKS

LIFT STATION RENEWAL & REPLACEMENT PROJECT

BRAESWOOD N. LIFT STATION
PROPOSED MECHANICAL SUPPORT DETAILS

WBS NUMBER
R-000267-0173-4
DRAWING SCALE
Scale N.T.S.
CITY OF HOUSTON PM
N.K. NUPUR KRISHNAN, PE

FOR CITY OF HOUSTON USE ONLY

HOUSTON PUBLIC WORKS
ACCEPTED AND FILED
82825
CITY DRAWING NUMBER
Approval Date 08/14/26
HOUSTON TX

E1M08 | SHEET NO. 24 OF 274

FILE NAME:
PLOTTED ON:

0 1 2 3 ORIGINAL SCALE IN INCHES FOR REDUCED PLANS

P:\Cordt\2024\24013 - Hatch - COH FY26 Lift Stations\CAD_DWG\Phase IV\4-Phase II BRAESWOOD\Phase II LS- BRAESWOOD.dwg

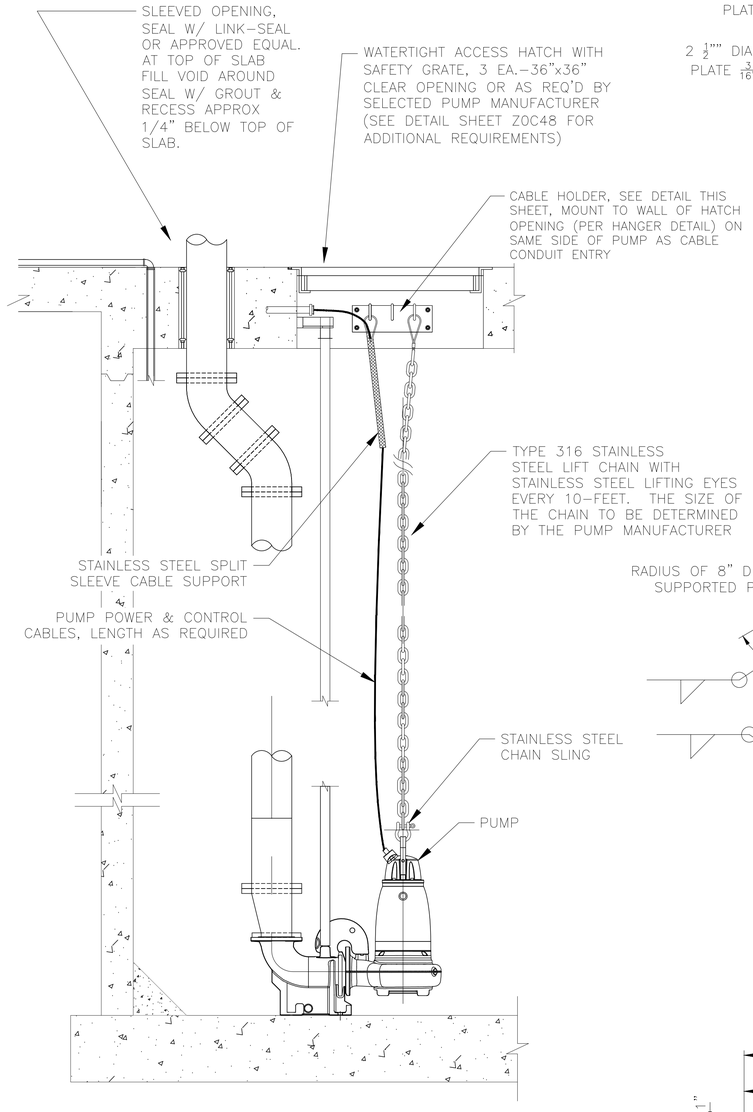

PUMP LIFTING & CABLING DETAIL

DETAIL '3'

N.T.S.

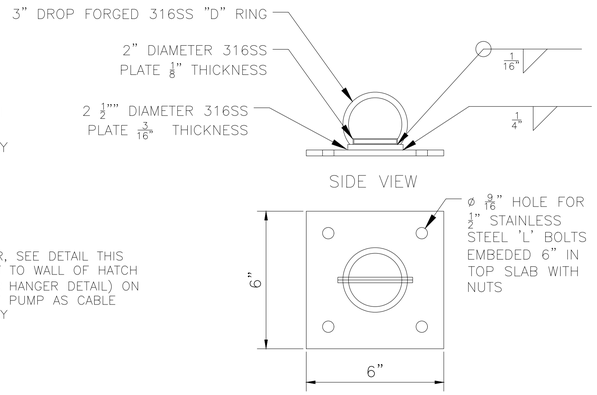

CB SERIES FALL PROTECTION CB-1B BOLT ANCHORED

DETAIL '1A'

N.T.S.

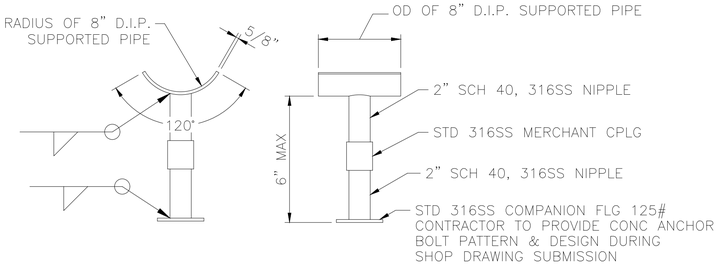

TYP ADJUSTABLE PIPE SUPPORT

DETAIL '2'

N.T.S.

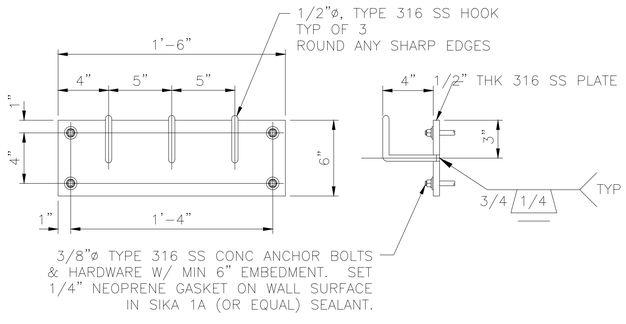

TYPICAL CABLE HOLDER ASSY

DETAIL 3A

N.T.S.

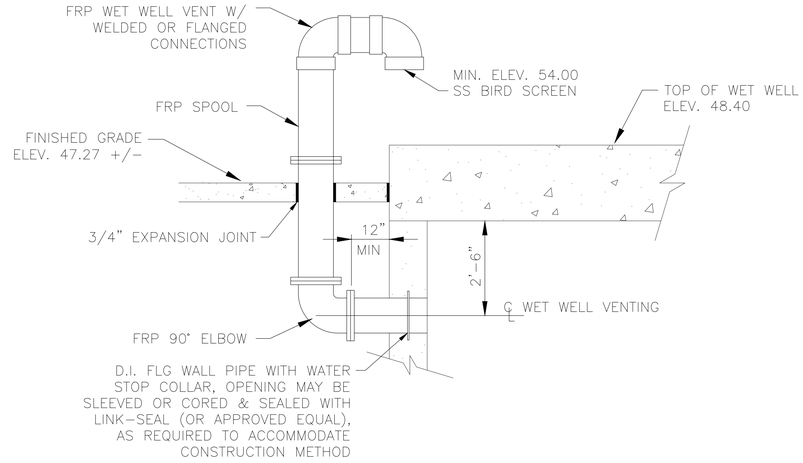

TYPICAL HIGH PROFILE WET WELL VENTING INSTALLATION

DETAIL '1'

N.T.S.

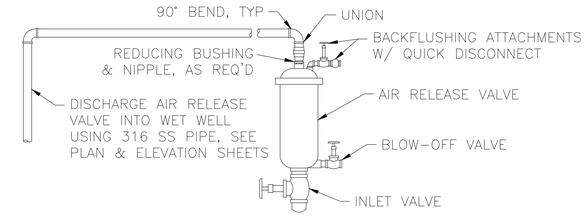

NOTE: PROVIDE STAINLESS STEEL VALVE BODY AND FITTINGS AS MAY BE REQUIRED BY SPECIFICATIONS

TYPICAL AIR RELEASE VALVE ASSY

DETAIL '10'

N.T.S.

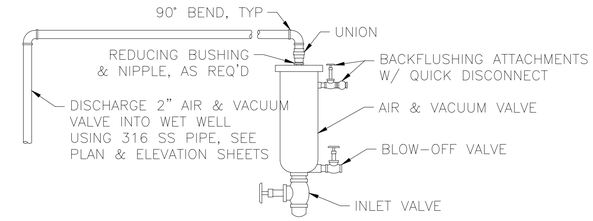

NOTE: PROVIDE STAINLESS STEEL VALVE BODY AND FITTINGS AS MAY BE REQUIRED BY SPECIFICATIONS

TYPICAL AIR & VACUUM VALVE ASSY

DETAIL '11'

N.T.S.

NO.	DATE	REVISION	APP.

AMANI ENGINEERING, INC.
11011 RICHMOND AVENUE
SUITE 700
HOUSTON, TEXAS 77024
TEL: (713) 270-5700
TBPE REG. NO. F-4528
TBPELS REG. NO. 1028200

HATCH
750 TOWN & COUNTRY BLVD.
SUITE 650
HOUSTON, TEXAS 77024
P:832-930-7670
TX FIRM NUMBER: F-314

SURVEYED BY:
AMANI ENGINEERING,INC.
FB NO. P-6357

STATE OF TEXAS
DAVID L. BROWN
48282
REGISTERED
PROFESSIONAL ENGINEER
8/11/2026

CITY OF HOUSTON
HOUSTON PUBLIC WORKS

LIFT STATION RENEWAL & REPLACEMENT PROJECT

BRAESWOOD N. LIFT STATION
PROPOSED MECHANICAL DETAILS

WBS NUMBER
R-000267-0173-4
DRAWING SCALE
Scale N.T.S.
CITY OF HOUSTON PM
N.K. NUPUR KRISHNAN, PE
SHEET NO. 25 OF 274

FOR CITY OF HOUSTON USE ONLY

HOUSTON PUBLIC WORKS
ACCEPTED AND FILED
82825
CITY DRAWING NUMBER
Approval Date 08/14/26
HOUSTON TX

E1M09

FILE NAME:
PLOTTED ON:

0 1 2 3 ORIGINAL SCALE IN INCHES FOR REDUCED PLANS

P:\Cordi\2024\24013 - Hatch - COH FY20 Lift Stations\CAD_DWG\Phase IV\4-Phase II BRAESWOOD\Phase II LS- BRAESWOOD.dwg

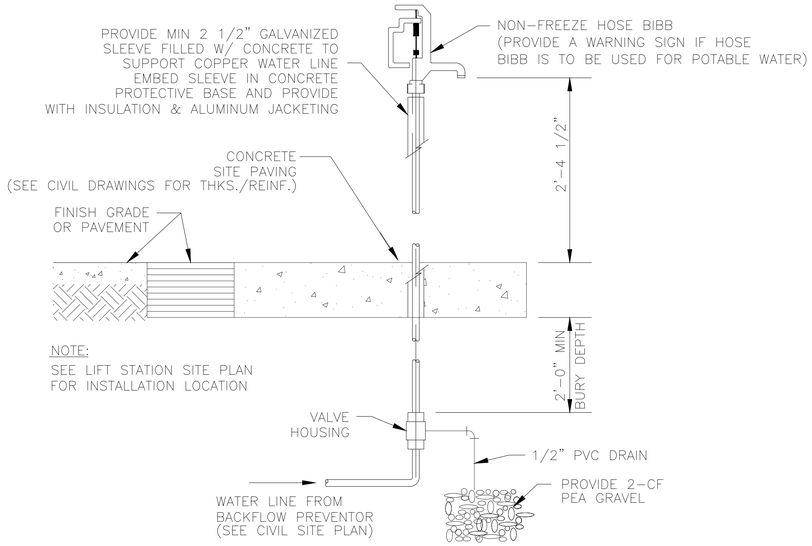

NON-FREEZE HOSE BIBB DETAIL

N.T.S.

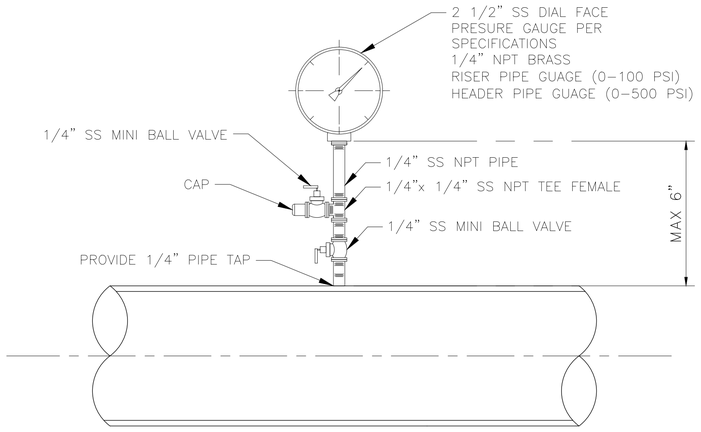

NOTE: ALL FITTINGS SHALL BE STAINLESS STEEL (316)

PRESSURE GAUGE DETAIL

DETAIL 15 E1M10

N.T.S.

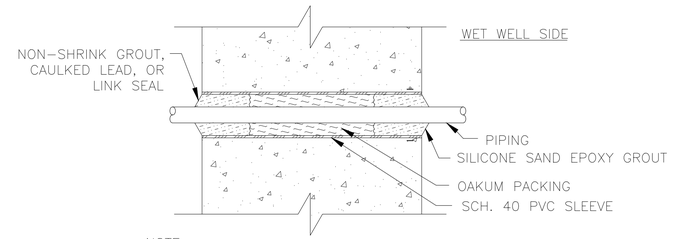

NOTE:
SLEEVED WET WELL PENETRATION IS NOT TO BE USED FOR CONDUIT INSTALLATION. SEE ELECTRICAL DETAIL SHEETS FOR CONDUIT PENETRATIONS.

SLEEVED WET WELL PENETRATION FOR PIPING 4"ø & SMALLER

DETAIL 6 E1M10

N.T.S.

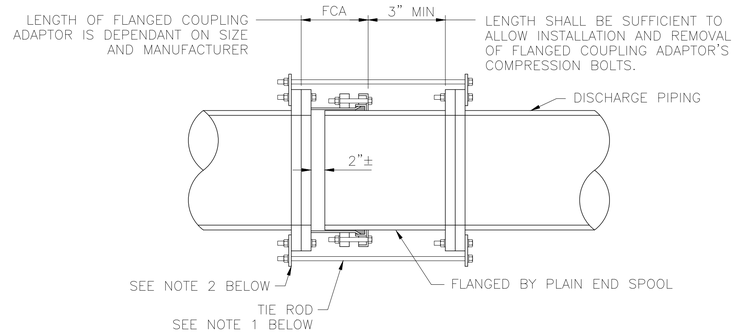

NOTES:

1. PROVIDE A NUMBER OF TIE RODS EQUAL TO 1/2 THE NUMBER OF FLANGE BOLTS. EVENLY SPACE INSTALLATION OF TIE RODS. DIAMETER OF TIE RODS TO BE EQUAL TO THE DIAMETER OF FLANGE BOLTS. LENGTH OF TIE RODS TO BE DETERMINED BY CONTRACTOR BASED ON SIZE AND MANUFACTURER OF FLANGED COUPLING ADAPTOR AND FINAL LENGTH OF SPOOL PIECE.
2. PROVIDE 316 SS TAB FOR ATTACHMENT OF TIE RODS. SIZE TO BE DETERMINED BY CONTRACTOR.
3. CONTRACTOR TO SUBMIT DETAILS DURING SHOP DRAWING SUBMISSION.
4. ALL HARDWARE SHALL BE 316 STAINLESS STEEL. TIE RODS SHOULD BE THREADED.
5. THIS RESTRAINT DOES NOT REPLACE THRUST BLOCKS TO BE PROVIDED AT OTHER LOCATIONS.

FLANGED COUPLING ADAPTOR RESTRAINT DETAIL

DETAIL 14 E1M10

N.T.S.

NO.	DATE	REVISION	APP.

AMANI ENGINEERING, INC.
11011 RICHMOND AVENUE
SUITE 700
HOUSTON, TEXAS 77024
TEL: (713) 270-5700
TBPE REG. NO. F-4528
TBPELS REG. NO. 1028200

HATCH
750 TOWN & COUNTRY BLVD.
SUITE 650
HOUSTON, TEXAS 77024
P:832-930-7670
TX FIRM NUMBER: F-314

SURVEYED BY:
AMANI ENGINEERING,INC.
FB NO. P-6357

STATE OF TEXAS
DAVID L. BROWN
48282
REGISTERED
PROFESSIONAL ENGINEER
8/11/2026

CITY OF HOUSTON
HOUSTON PUBLIC WORKS

LIFT STATION RENEWAL & REPLACEMENT PROJECT

BRAESWOOD N. LIFT STATION
PROPOSED MECHANICAL DETAILS

WBS NUMBER	FOR CITY OF HOUSTON USE ONLY
R-000267-0173-4	HOUSTON PUBLIC WORKS ACCEPTED AND FILED 82825 CITY DRAWING NUMBER Approval Date 08/14/26 HOUSTON TX
DRAWING SCALE	
Scale N.T.S.	
CITY OF HOUSTON PM	
N.K. NUPUR KRISHNAN, PE	
SHEET NO. 26 OF 274	

E1M10

FILE NAME:
PLOTTED ON:

0 1 2 3 ORIGINAL SCALE IN INCHES FOR REDUCED PLANS

P:\Cordi\2024\24013 - Hatch - COH FY20 Lift Stations\CAD_DWG\Phase IV\4-Phase II BRAESWOOD\Phase II LS- BRAESWOOD.dwg

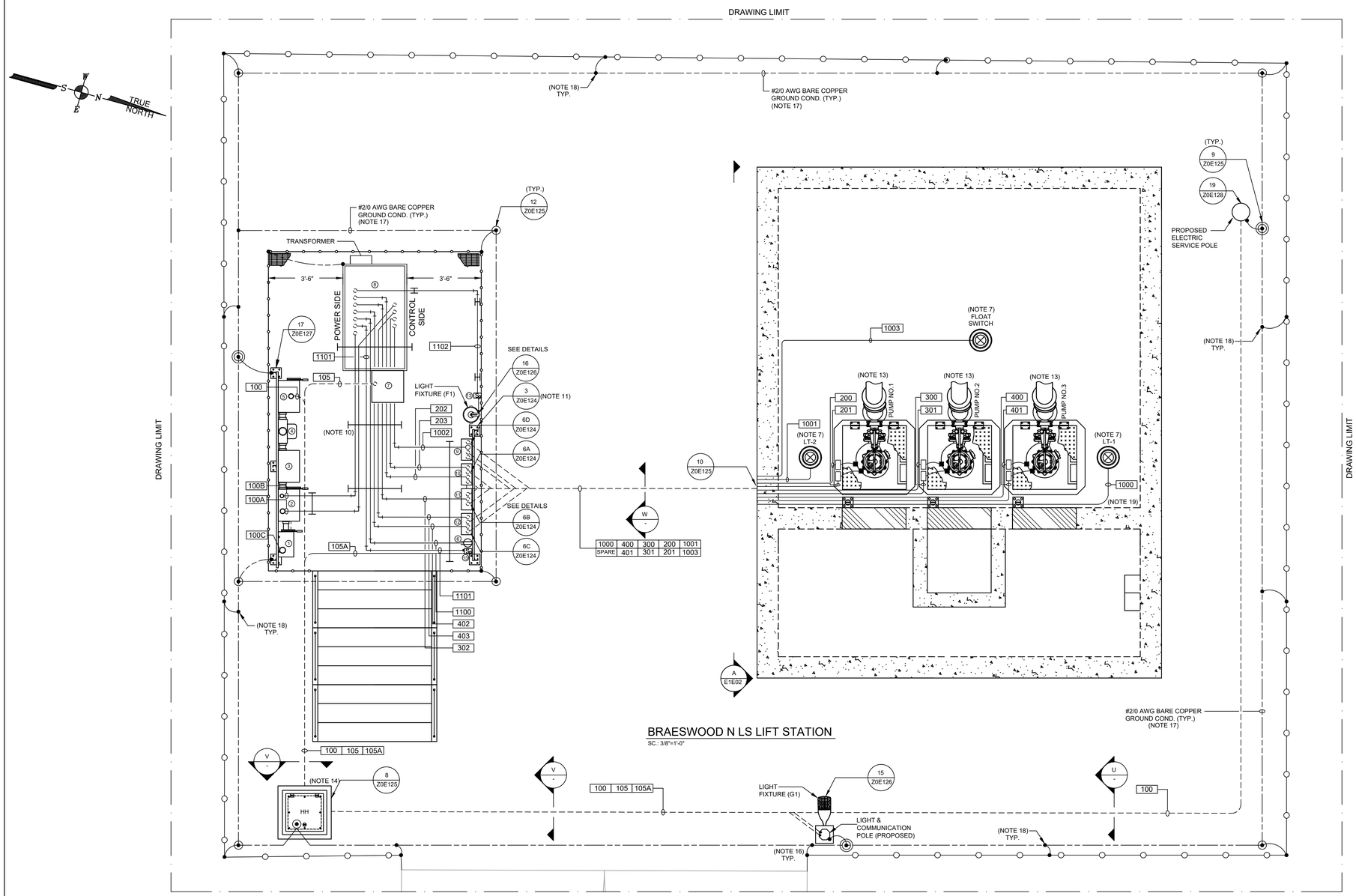

No.	DESCRIPTION
(1)	GENERATOR FUSED DISCONNECT
(2)	MANUAL TRANSFER SWITCH
(3)	SERVICE DISCONNECT SWITCH
(4)	UTILITY METER
(5)	METER DISCONNECT SWITCH
(6)	WEATHER PROOF GFI
(7)	PPU-AC PANEL
(8)	POWER & CONTROL CABINET
(9)	LEVEL TRANSMITTER J-BOX
(10)	PUMP NO.1 J-BOX
(11)	PUMP NO.2 J-BOX
(12)	PUMP NO.3 J-BOX
(13)	LIGHTING SWITCH

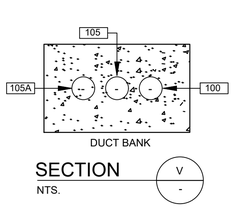

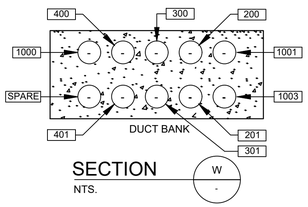

NOTES:

1. GROUNDING SHALL BE PER N.E.C. MINIMUM REQUIREMENTS.
2. THE ELECTRICAL INSTALLATION WITHIN THE WET WELL SHALL BE EXPLOSION PROOF IN ACCORDANCE WITH ARTICLE 510 OF THE NEC FOR CLASS I, DIVISION 1, GROUP C & D.
3. WHERE JUNCTION BOXES ARE SHOWN, THEY SHALL BE USED FOR PULLING OR TERMINATION PURPOSES ONLY. SPLICES WILL NOT BE ALLOWED EXCEPT AS PROVIDED BY NOTE 5 AND AT LIGHTING AND RECEPTACLE TERMINATIONS.
4. FOR MOTOR FEEDER AND CONTROL CABLES, INSTALL TYPE CSBE CABLE SEALING FITTING AT JUNCTION BOX ENTRANCE AND EXPLOSION PROOF SEAL IN CONDUITS TO CONTROL BUILDING OR PANEL.
5. TERMINATE PUMP POWER & CONTROL CONDUITS WITH CSBE SEAL. ATTACH STAINLESS STEEL SPLIT SLEEVE CABLE SUPPORT ON EACH POWER AND CONTROL CABLE.
6. ALL PUMP POWER AND CONTROL CABLE LEADS MUST BE THE SAME LENGTH REGARDLESS OF PUMP LOCATION FROM TERMINAL/JUNCTION BOX.
7. LEVEL TRANSMITTERS AND FLOAT SWITCH SHOWN IN APPROXIMATE LOCATION. ACTUAL LOCATION SHALL FIELD VERIFY.
8. INSIDE WET WELL IS CLASSIFIED AS CLASS I, DIVISION 1. OUTSIDE WET WELL WITHIN 5 FEET OF WET WELL OPENINGS ARE CLASSIFIED AS CLASS I, DIVISION 2.
9. NEW INSTRUMENT TO BE INSTALLED IN THE SAME AREA AS INSTRUMENT REMOVED.
10. CONDUITS INSTALLED UNDER THE PLATFORM AND FIXED TO UNISTRUT SUPPORT.
11. THE JUNCTION BOX RACK MUST BE AT LEAST 6' WIDE.
12. THE ELECTRICAL SERVICE RACK MUST BE AT LEAST 4' WIDE.
13. FOR MECHANICAL PLAN VIEW, SEE DRAWING No. E1M05.
14. BELOW SURFACE CONDUIT RUNS SHALL HAVE TOTAL BENDS EQUAL TO OR LESS THAN 270 DEGREES. INSTALL HANDHOLES AT GRADE LEVEL WHERE NECESSARY.
15. GROUND FENCE USING #2/0 BARE COPPER CONDUCTOR AT FOUR CORNERS AND INTERMEDIATE POSTS AT INTERVALS NOT TO EXCEED 50 FEET.
16. PROVIDE FLEXIBLE BONDING JUMPERS ACROSS ALL GATE HINGES TO MAINTAIN CONTINUOUS GROUNDING.
17. GROUNDING LOOP SHALL BE BURIED 24" BELOW FINISHED GRADE.
18. EXOTHERMIC (THERMOWELD) CONNECTION OF #2/0 BARE COPPER GROUND CONDUCTOR TO REBAR.
19. CONDUIT WILL BE EMBEDDED IN THE TOP CONCRETE SLAB, NOT ON TOP OR BELOW THE SLAB.

NO.	DATE	REVISION	APP.

HATCH
750 TOWN & COUNTRY BLVD
SUITE 650
HOUSTON, TX 77024
P: 832-930-7670
TX FIRM NUMBER: F-314

SURVEYED BY:
AMANI ENGINEERING, INC.
FB NO. P-6357

STATE OF TEXAS
GUY N SEVERN
105809
LICENSED PROFESSIONAL ENGINEER
7/21/2026

CITY OF HOUSTON
HOUSTON PUBLIC WORKS

LIFT STATION RENEWAL & REPLACEMENT PROJECT
BRAESWOOD N LS

ELECTRICAL SITE PLAN

WBS NUMBER
R-000267-0173-4
DRAWING SCALE
AS NOTED
CITY OF HOUSTON PM
NUPUR KRISHNAN P.E. N.K.

FOR CITY OF HOUSTON USE ONLY

HOUSTON PUBLIC WORKS
ACCEPTED AND FILED
82825
CITY DRAWING NUMBER
Approval Date 08/14/26
HOUSTON TX

E1E01 | SHEET NO. 27 OF 274

PLOTTED: 8/11/2026 10:35 AM
PLOT STYLE: COH.ctb
FILE PATH: \\wsppplot01\d$\Global ProjectWise Plotting - WUS\Queue 5\queue5.dwg

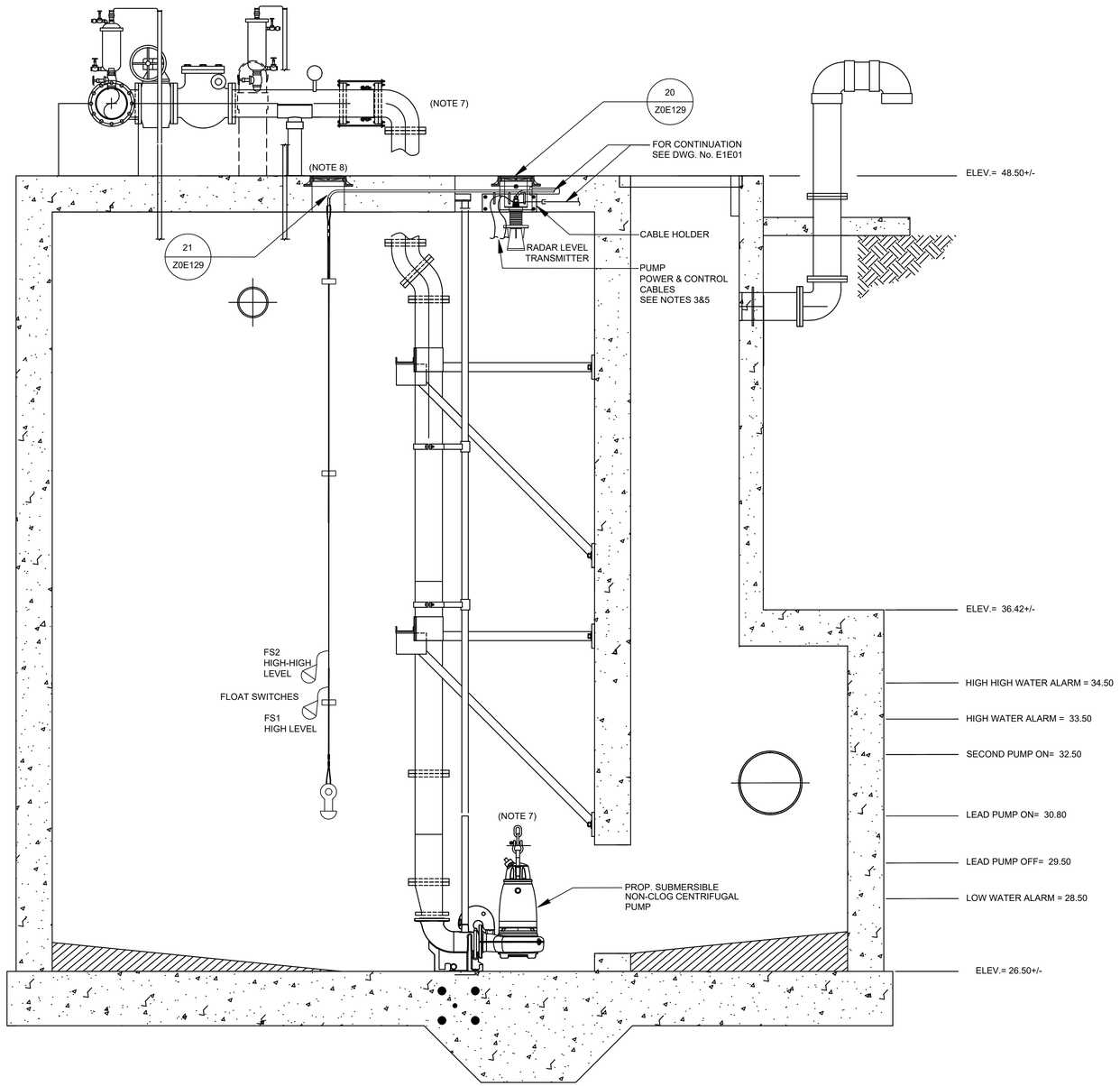

BRAESWOOD N - LIFT STATION

A – ELEVATION

SC.: 1/2"=1'-0"

NOTES:

1. GROUNDING SHALL BE PER N.E.C. MINIMUM REQUIREMENTS.
2. THE ELECTRICAL INSTALLATION WITHIN THE WET WELL SHALL BE EXPLOSION PROOF IN ACCORDANCE WITH ARTICLE 510 OF THE NEC FOR CLASS I, DIVISION I, GROUP C & D.
3. ALL PUMP POWER AND CONTROL CABLE LEADS MUST BE THE SAME LENGTH REGARDLESS OF PUMP LOCATION FROM TERMINAL/JUNCTION BOX.
4. FOR MOTOR FEEDER AND CONTROL CABLES. INSTALL TYPE CSBE CABLE SEALING FITTING AT JUNCTION BOX ENTRANCE AND EXPLOSION PROOF SEAL IN CONDUITS TO POWER & CONTROL PANEL.
5. TERMINATE PUMP POWER & CONTROL CONDUITS WITH CSBE SEAL. ATTACH STAINLESS STEEL SPLIT SLEEVE CABLE SUPPORT ON EACH POWER AND CONTROL CABLE.
6. INSTRUMENTS SHOWN IN APPROXIMATE LOCATION. ACTUAL LOCATION SHALL BE CONFIRMED DURING CONSTRUCTION.
7. FOR MECHANICAL ELEVATION SECTION, SEE DRAWING No. E1M06.
8. INSTRUMENT TO BE INSTALLED IN EXISTING FLOOR OPENING AREA. REFER TO DRAWING NO. E1M03, "INTERMEDIATE FLOOR PLAN VIEW – MECHANICAL DEMOLITION."

NO.	DATE	REVISION	APP.

HATCH
750 TOWN & COUNTRY BLVD
SUITE 650
HOUSTON, TX 77024
P: 832-930-7670
TX FIRM NUMBER: F-314

SURVEYED BY:
AMANI ENGINEERING, INC.
FB NO. P-6357

STATE OF TEXAS
GUY N SEVERN
105809
LICENSED
PROFESSIONAL ENGINEER
7/21/2026

CITY OF HOUSTON
HOUSTON PUBLIC WORKS

LIFT STATION RENEWAL & REPLACEMENT PROJECT
BRAESWOOD N LS

LIFT STATION ELEVATION

WBS NUMBER
R-000267-0173-4
DRAWING SCALE
AS NOTED
CITY OF HOUSTON PM
NUPUR KRISHNAN P.E. N.K.

FOR CITY OF HOUSTON USE ONLY

HOUSTON PUBLIC WORKS
ACCEPTED AND FILED
82825
CITY DRAWING NUMBER
Approval Date 08/14/26
HOUSTON TX

E1E02

SHEET NO. 28 OF 274

PLOTTED: 8/11/2026 10:46 AM
PLOT STYLE: COH.ctb
FILE PATH: \\wusppplot01\d$\Global ProjectWise Plotting - WUS\Queue 5\queue5.dwg

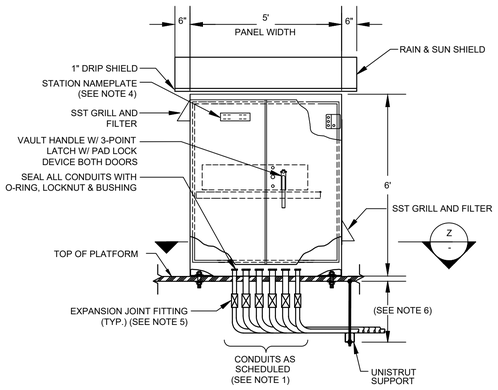

POWER & CONTROL CABINET - FRONT CONDUIT CONNECTION

SC.: NTS

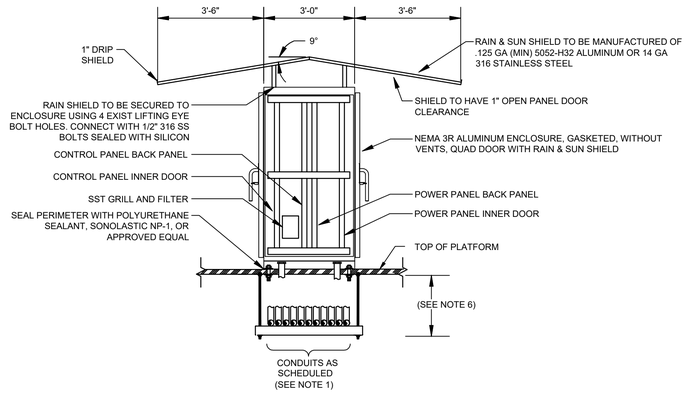

POWER & CONTROL CABINET - SIDE CONDUIT CONNECTION

SC.: NTS

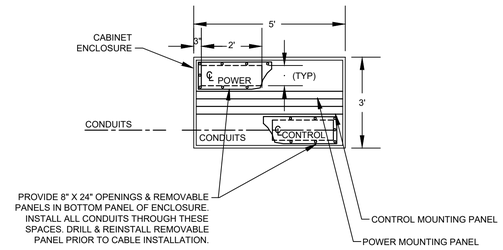

SECTION Z -

NTS

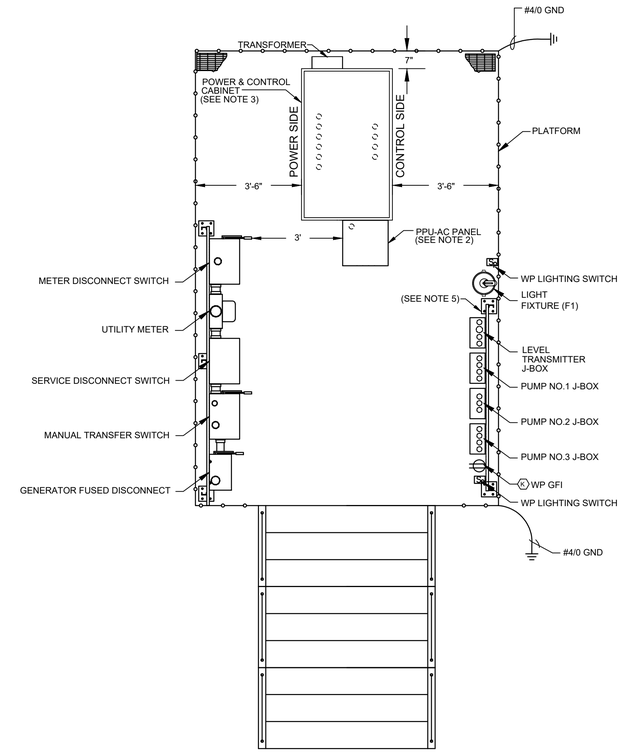

POWER & CONTROL CABINET ENCLOSURE ON ELEVATED PLATFORM DETAIL

SC.: NTS

NOTES:

1. FOR CONDUIT SCHEDULE SEE DRAWING NO. E1E20.
2. FOR PPU-AC PANEL SEE DRAWING NO. E1E10
3. FOR POWER & CONTROL PANEL DETAIL SEE DRAWING NO. E1E04.
4. FOR NAME PLATE SCHEDULE SEE DRAWING NO. E1E05.
5. EXPANSION JOINT FITTINGS AS REQUIRED.
6. DEPTH TO BE DETERMINED IN FIELD.

NO.	DATE	REVISION	APP.

HATCH
750 TOWN & COUNTRY BLVD
SUITE 650
HOUSTON, TX 77024
P: 832-930-7670
TX FIRM NUMBER: F-314

SURVEYED BY:
AMANI ENGINEERING, INC.
FB NO. P-6357

STATE OF TEXAS
GUY N SEVERN
105809
LICENSED PROFESSIONAL ENGINEER
7/21/2026

CITY OF HOUSTON

HOUSTON PUBLIC WORKS

LIFT STATION RENEWAL & REPLACEMENT PROJECT

BRAESWOOD N LS

POWER & CONTROL CABINET INSTALLATION

WBS NUMBER	FOR CITY OF HOUSTON USE ONLY
R-000267-0173-4	HOUSTON PUBLIC WORKS ACCEPTED AND FILED 82825 CITY DRAWING NUMBER Approval Date 08/14/26 HOUSTON TX
DRAWING SCALE	
AS NOTED	
CITY OF HOUSTON PM	
NUPUR KRISHNAN P.E. N.K.	
SHEET NO. 29 OF 274	

E1E03

PLOTTED: 8/11/2026 10:35 AM
PLOT STYLE: COH.ctb
FILE PATH: \\wuspplot01\d$\Global ProjectWise Plotting - WUS\Queue 4\queue4.dwg

EQUIPMENT AND DEVICE SCHEDULE

ITEM	QTY.	DESCRIPTION
A	1	PANEL BOARD, 120/240V, 2 PHASE, 3 WIRE, 100A, 24 CKTS, SQUARE D MODEL # QP24100CP 21HX, 14.25W
B	3	NEMA MOTOR STARTER, TYPE S, NONREVERSING, SIZE 3, 90A, 50HP AT 460VAC, 100kA SCCR, 3 PHASE, 3 POLE, 120 VAC COIL, MODEL 8536SEO1V02H31SX21
C	3	TIME DELAY RELAY WITH THREE FORM C CONTACTS, 24VDC COIL AND 11 PIN SOCKET BASE.TURCK RELECO MODEL CT3-E30/L WITH S3-S BASE C3-A30X/24DC
D	1	SINGLE CHANNEL INTRINSICALLY SAFE RELAY, ATC MODEL ISO-120-AFA
E	1	PROGRAMMING SCREEN (OIT), SIEMENS INDUSTRY TP900 - COMFORT TOUCH PANEL
F	3	HAND-OFF-AUTO SWITCH, 3 POSITION, HEAVY-DUTY, OILTIGHT WITH 2 SETS OF CONTACT BLOCKS (PUMP CONTROL), ALLEN-BRADLEY MODEL 800H-JR2B
G	3	INDICATING LIGHT, HEAVY DUTY, OILTIGHT, RED, 24 VDC, LED, WITH "RUN" LEGEND, ALLEN-BRADLEY MODEL 800H-QRTH2R
H	6	TERMINAL RAIL, STEEL GALVANIC ZINC, W: 2000 mm, H: 15 mm, D: 5.5 mm, WEIDMULLER ITEM No.0117510000
I	1	PUMP ALARM RESET PUSHBUTTON, ALLEN-BRADLEY MODEL 800H-AR2BF
J	2	SWITCH FOR CABINET LIGHT, 120V, 20A, SPST, HUBBELL MODEL HBL1221I, WITH METALLIC BOX 4"x4" AND STEEL METALLIC SQUARE BOX COVER DUPLEX
K	2	DUPLEX RECEPTACLE, 120V, 20A, 2 WIRE, GROUNDED, HUBBELL MODEL HBL53621, WITH METALLIC BOX 4"x4" AND STEEL METALLIC SQUARE BOX SWITCH COVER.
L	2	24" LED STRIP LIGHT 120V SUITABLE FOR ZERO DEGREE OPERATION, HOFFMAN MODEL LF120V28
M	1	480VAC, 3 PHASES SURGE PROTECTOR - SURGE SUPPRESSION INC MODEL SDLA3Y2
N	39	TAG CARRIER, SCHT 5 WEIDMULLER, CATALOG NO. 0292460000
P	3	CURRENT TRANSFORMER, RATIO AS SCHEDULED W/4-20mA OUTPUT, PHOENIX CONTACT MODEL MCR-SL-CUC-100-I
Q	12	TERMINAL BLOCKS, SIZED FOR MOTOR POWER REQUIREMENTS, WEIDMULLER WDU 10
R	16	WIRE DUCT 2" WIDE X 3" DEEP MINIMUM, LENGTH 6', HELLERMANN TYTON MODEL SL2X3W4
S	22	END BRACKET, WEW 35/2 WEIDMULLER, CATALOG NO. 1061200000
T	61	NAMEPLATES, (SEE NAMEPLATE SCHEDULE & EQUIPMENT LAYOUT DRAWINGS)
U	3	ANALOG INPUT MODULE, 4 ANALOG INPUT , SIEMENS MODEL SIMATIC S7-1200, 6ES7231-4HD32-0XB0
V	6	FUSE HOLDER & FUSES - PHASE FAILURE FERRAZ SHAWMUT, PN 30313
W	1	72"x60"x36" NEMA 3R ENCLOSURE, GASKETED, WITHOUT VENTS INCLUDING QUAD DOORS, BACKPLANES, & RAIN-SUN SHIELD MANUFACTURED OF .125 5052-H32 ALUMINUM - NEMA ENCLOSURES MFG. CORP. NE726036-12FSDDA WITH 2ea. NEAF7260P & 4 ea. NE7230SWP
X	1	DOOR MOUNTED ROTARY HANDLE DISCONNECT SWITCH (SUITABLE ENVIROMENT), SQUARE D MODEL 9421LZ250H43
Y	1	MAIN CIRCUIT BREAKER, POWER PACT H, 100A 3-POLE, 600VAC, THERMAL MAGNETIC, SQUARE D, MODEL HJL36100T
Z	3	MOTOR CIRCUIT BREAKER, POWER PACT H, 60A, 3 POLE, 600VAC, THERMAL MAGNETIC, SQUARE D, MODEL HGL36060T
AA	164	TERMINAL BLOCKS, WEIDMULLER WDU 2.5, CATALOG NO. 1020000000
BB	3	EXTERNAL OVERLOAD RESET PUSHBUTTON MECHANISM, SQUARE D MODEL 9066 RA1
CC	2	ANALOG I/O SURGE SUPPRESSOR EATON MODEL IOP32D
DD	1	DIGITAL INPUT MODULE, 16 DIGITAL INPUT 24 VDC , SIEMENS MODEL SIMATIC S7-1200, 6ES7221-1BH32-0XB0
EE	1	CIRCUIT BREAKER POWERPACT H, 30A, 2 POLE, 600VAC, THERMAL MAGNETIC, SQUARE D, MODEL HJL26030
FF	1	GROUND BUS, SQUARE D MODEL 1630 PK9GTA
GG	1	LED LIGHT FOR INDOOR/OUTDOOR USE, 24 VDC, COLOR RED, FEDERAL SIGNAL MODEL LP3PL-024R.
HH	1	10 KVA, 480 - 240/120V, 1Φ, 3W DRY TYPE TRANSFORMER
II	1	120VAC - 24VAC POWER SUPPLY (AS REQUIRED), SQUARE D MODEL 9070T200D13
JJ	12	CARTRIDGE FUSES & FUSE HOLDER, FERRAZ SHAWMUT, PN 30313
KK	8	QUARTER TURN CAPTIVE DOOR CLOSURE
LL	1	120VAC - 24VDC PLC POWER SUPPLY 5A, PHOENIX CONTACT MODEL QUINT-PS/1AC/24DC/5
MM	2	MOTION SWITCH, CHERRY MODEL E13-00H
NN	*	NOT USED
PP	2	INDICATING LED LIGHT, HEAVY DUTY, OILTIGHT, GREEN, 24 VDC, LED WITH " PRIMARY PLC" & "BACKUP, PLC" LEGEND, ALLEN-BRADLEY MODEL 800H-QRTH2G
QQ	21	CONTROL RELAY, 3 POLE, 24VDC CONTROL COIL - TURCK C3-A30X/24DC W/S3-S BASE
RR	2	CONTROL RELAY, 3 POLE, 120VAC CONTROL COIL - TURCK C3-A30X/120AC W/S3-S BASE
SS	1	COMMUNICATION ETHERNET SWITCH, SIEMENS MODEL SCALANCE X310FE
TT	1	120VAC SURGE SURGE PROTECTOR WITH ALARM CONTACT - SURGE SUPPRESSION INC MODEL SDLA1P1
UU	2	PROGRAMMABLE LOGIC CONTROLLER WITH EXPANSION UNIT, SIEMENS MODEL 6ES7214-1HG40-0XB0
VV	1	PHASE AND UNDER VOLTAGE MONITOR, DIVERSIFIED ELECTRONICS MODEL PDB-480-ALE
WW	118	FUSED TERMINAL BLOCKS, WEIDMULLER WSI 6, CATALOG NO. 1011000000
XX	3	PUMP PROTECTION MODULE RATED FOR CLASS I, DIVISION I, MINICAS II 83 58 57 24VDC/AC
YY	2	ANALOG SIGNAL ISOLATOR, TURCK MODEL IMS-AI-DLI-22-DLI/L
ZZ	1	1-GANG WEATHERPROOF-IN-USE COVER, TAYMAC, MODEL MM420C.
AB	1	TAMPER/WEATHER RESISTANT GFCI RECEPTACLE, LEVITON, MODEL GFWT1-W.
AC	1	POWER DISTRIBUTION BLOCK, 3 POLE, EDISON MODEL HPB106-3
AD	1	1-GANG WEATHERPROOF BOX, 3-1/2", 2" DEPTH, ALUMINUM DIE CAST, BELL, MODEL 5320-0.
AE	1	6" EXHAUST FAN, 120V, STAINLESS FILTERS & GRILL PACKAGE W/BUG GUARD, HOFFMAN MODEL TFP6
AF	1	T-STAT FOR EXHAUST FAN, HOFFMAN, MODEL ATEMNOF

* - AS SCHEDULED

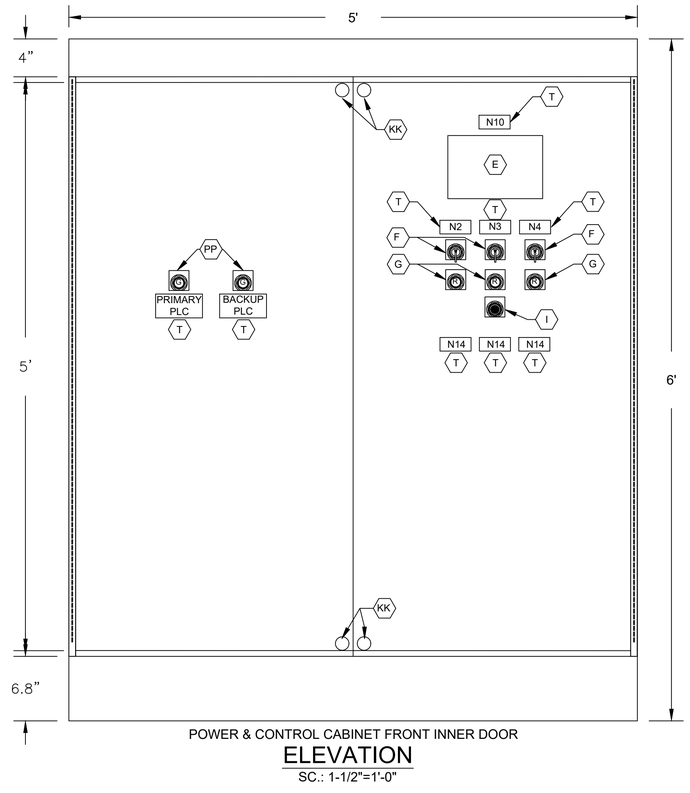

POWER & CONTROL CABINET FRONT INNER DOOR

ELEVATION

SC.: 1-1/2"=1'-0"

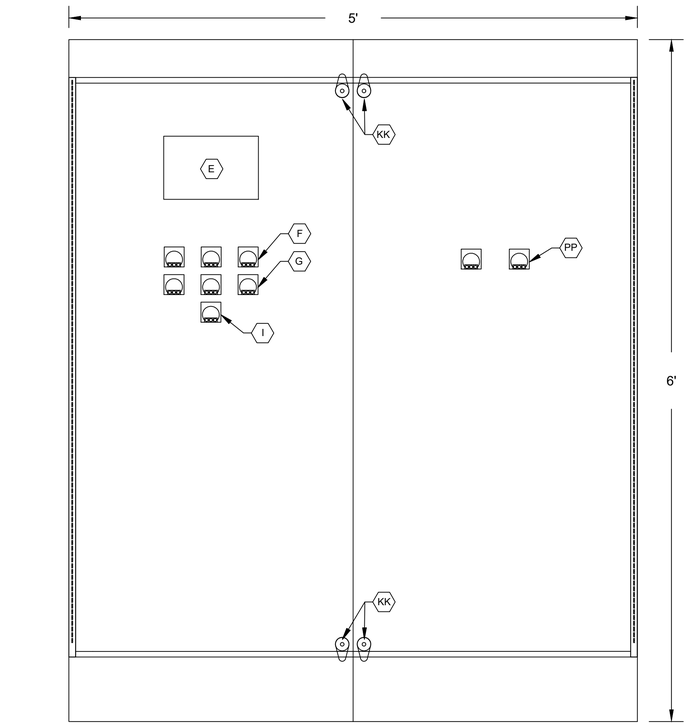

POWER & CONTROL CABINET BACK INNER DOOR

ELEVATION

SC.: 1-1/2"=1'-0"

NO.	DATE	REVISION	APP.

NOTES:

1. NAMEPLATES SHALL BE MOUNTED TO PANELS USING STAINLESS STEEL HARDWARE.
2. REFER SPECIFICATIONS FOR ALL PANEL COMPONENTS.

HATCH
750 TOWN & COUNTRY BLVD
SUITE 650
HOUSTON, TX 77024
P: 832-930-7670
TX FIRM NUMBER: F-314

SURVEYED BY:
AMANI ENGINEERING, INC.
FB NO. P-6357

STATE OF TEXAS
GUY N SEVERN
105809
LICENSED PROFESSIONAL ENGINEER
7/21/2026

CITY OF HOUSTON
HOUSTON PUBLIC WORKS

LIFT STATION RENEWAL & REPLACEMENT PROJECT
BRAESWOOD N LS

POWER & CONTROL CABINET EQUIPMENT LAYOUT AND SCHEDULE

WBS NUMBER	FOR CITY OF HOUSTON USE ONLY
R-000267-0173-4	HOUSTON PUBLIC WORKS ACCEPTED AND FILED 82825 CITY DRAWING NUMBER Approval Date 08/14/26 HOUSTON TX
DRAWING SCALE	
AS NOTED	
CITY OF HOUSTON PM	
NUPUR KRISHNAN P.E. N.K.	
SHEET NO. 30 OF 274	

E1E04

PLOTTED: 8/11/2026 10:35 AM
PLOT STYLE: COH.ctb
FILE PATH: \\wspplot01\d$\Global ProjectWise Plotting - WUS\Queue 3\queue3.dwg

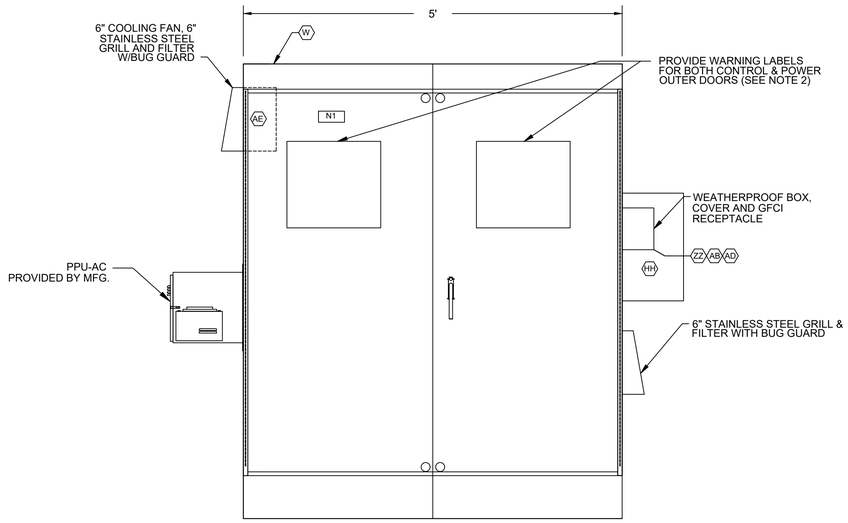

POWER & CONTROL CABINET (CONTROL SIDE)
OUTER DOOR

ELEVATION

SC.: 1"=1'-0"

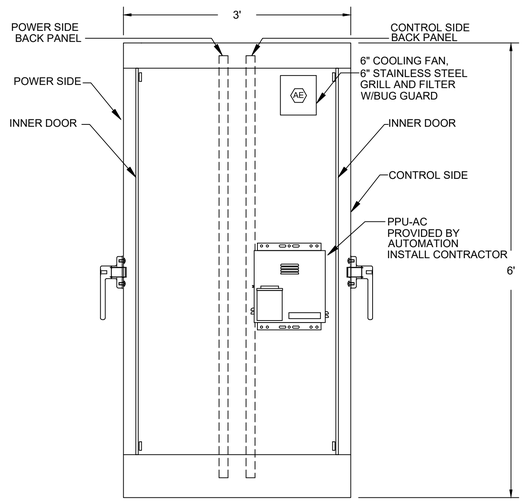

POWER & CONTROL CABINET
(LEFT SIDE VIEW)

ELEVATION

SC.: 1"=1'-0"

NAMEPLATE SCHEDULE

DESIGNATION	ENGRAVED
N1	BRAESWOOD N LS PUMP STATION
N2	PUMP NO. 1
N3	PUMP NO. 2
N4	PUMP NO. 3
N5	NOT USED.
N6	NOT USED.
N7	NOT USED.
N8	NOT USED.
N9	NOT USED.
N10	PROGRAMMING SCREEN
N11	NOT USED.
N12	PRIMARY PLC
N13	BACKUP PLC
N14	MOTOR DATA HORSEPOWER (OUTPUT) ---------- 25 RPM AT FULL LOAD ---------- 1755 MAX START PER HOUR ---------- 30 FREQUENCY ---------- 60 hZ NUMBER OF PHASES ---------- 3 MODEL NUMBER ---------- RATED VOLTAGE ---------- 480V SERVICE FACTOR ---------- 0.89 FULL LOAD AMPS ---------- 30A INSULATION CLAS ---------- H NEMA DESIGN LETTER ---------- TEMPERATURE RISE ---------- NEMA FRAME SIZE ---------- DATE OF MANUFACTURE ---------- THERMO PROTECTION ---------- MOISTURE PROTECTION ----------
N15	EXTERNAL OVERLOAD RESET PUSH BUTTON MECHANISM
N16	MAIN BREAKER

NOTES:

1. SEE SHEET E1E04 FOR EQUIPMENT AND DEVICE SCHEDULE.
2. FOR ARC FLASH HAZARD WARNNG AND LABEL REQUIREMENTS REFER TO NEC SECTIONS 110.16 & 110.21

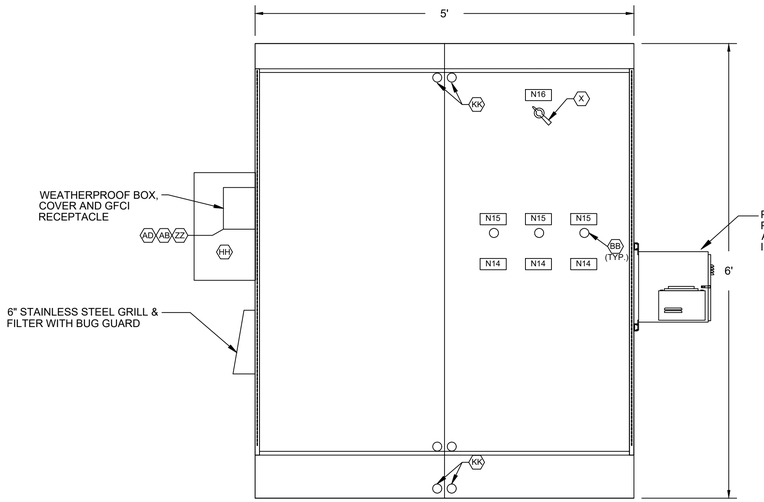

POWER & CONTROL CABINET (POWER SIDE)
INNER DOOR

ELEVATION

SC.: 1"=1'-0"
(SEE NOTE 1)

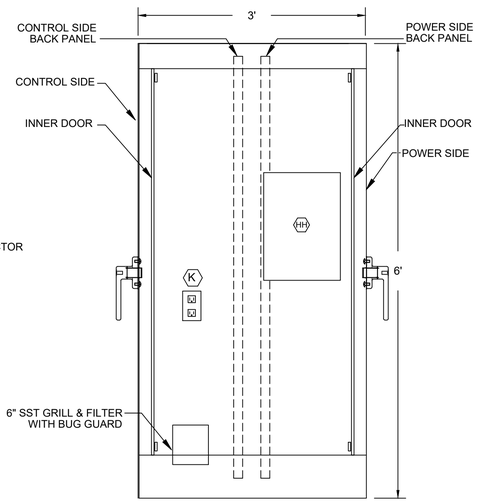

POWER & CONTROL CABINET
(RIGHT SIDE VIEW)

ELEVATION

SC.: 1"=1'-0"

NO.	DATE	REVISION	APP.

HATCH
750 TOWN & COUNTRY BLVD
SUITE 650
HOUSTON, TX 77024
P: 832-930-7670
TX FIRM NUMBER: F-314

SURVEYED BY:
AMANI ENGINEERING, INC.
FB NO. P-6357

STATE OF TEXAS
GUY N SEVERN
105809
LICENSED PROFESSIONAL ENGINEER
7/21/2026

CITY OF HOUSTON

HOUSTON PUBLIC WORKS

LIFT STATION RENEWAL & REPLACEMENT PROJECT

BRAESWOOD N LS

POWER & CONTROL CABINET EQUIPMENT LAYOUT-I

WBS NUMBER	FOR CITY OF HOUSTON USE ONLY
R-000267-0173-4	HOUSTON PUBLIC WORKS ACCEPTED AND FILED 82825 CITY DRAWING NUMBER Approval Date 08/14/26 HOUSTON TX
DRAWING SCALE	
AS NOTED	
CITY OF HOUSTON PM	
NUPUR KRISHNAN P.E. N.K.	

E1E05 SHEET NO. 31 OF 274

PLOTTED: 8/11/2026 10:35 AM
PLOT STYLE: COH.ctb
FILE PATH: \\wusppplot01\d$\Global ProjectWise Plotting - WUS\Queue 2\queue2.dwg

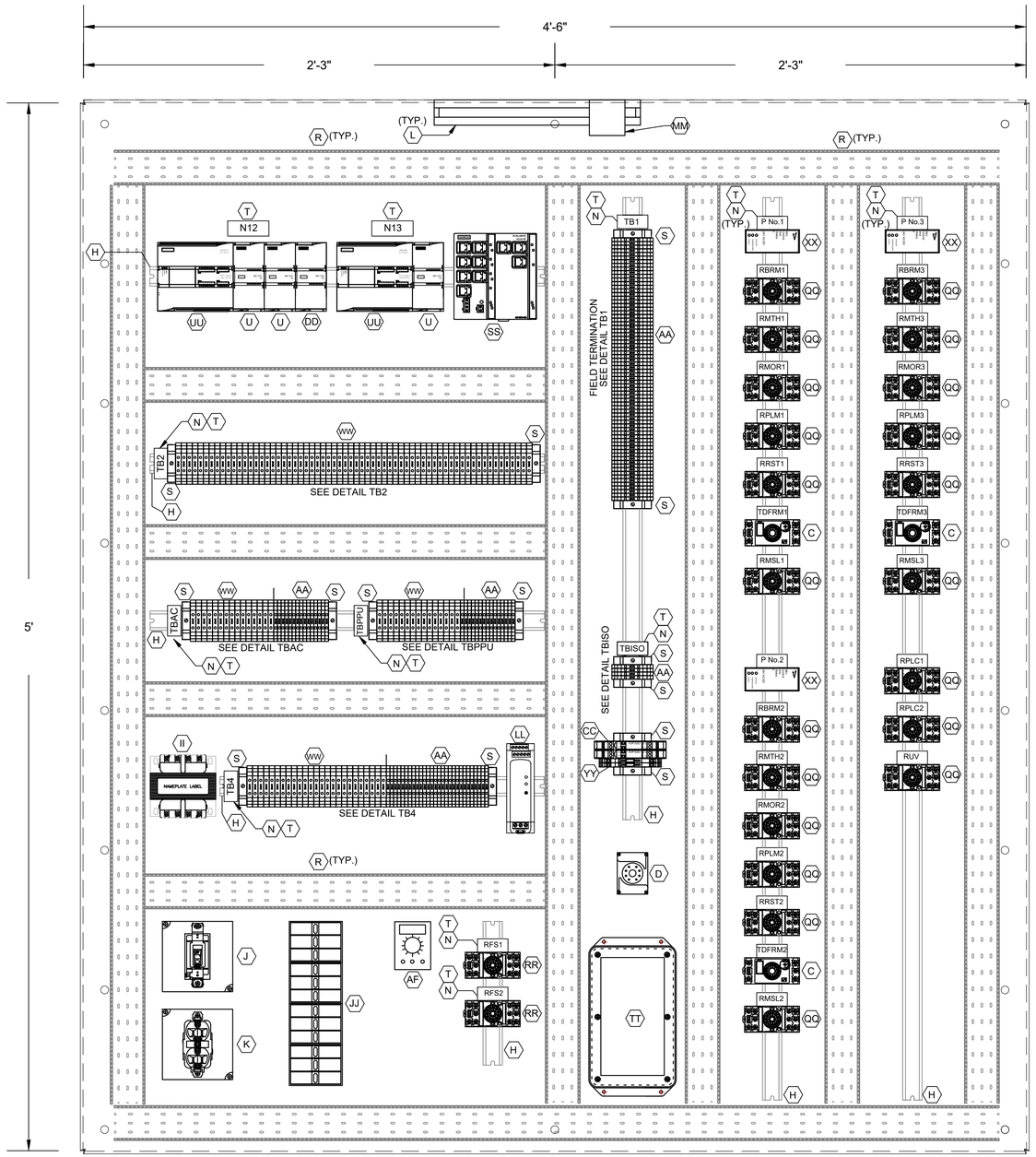

CONTROL PANEL
ELEVATION
SC.: 3"=1'-0"

L1A
L1N
SPARE
3A
3B
3C
49
50
51
52
53
54
1004
1
24V-
24V-
1002
2
11
1001
1001A
12
1003
1003A
1002
1004
18
3N
SPARE
36
36N
41
42
43
44
SPARE
L1A
L1N
103
104
105
106
107
108
110
113
115
116
119
SPARE
203
204
205
206
207
208
210
213
215
216
219
SPARE
303
304
305
306
307
308
310
313
315
316
319

DETAIL TB1

ALL L AND N FOR EACH PUMP CONTROL TO BE FUSED

36A
37A
50
52
54
52A
54A
L+
M
35B
38B
41B
47B
13B
13AB
13GB
L+
M
14B
14A
14GB
L+
M
13
13A
13G
14
14A
14G
17
18
18B
28
29
32
35B
33
42
44
103
104
115
109
110
118
120
121
122
123
209
210
211
218
220
222
223
309
310
316
317
318
320
322
323

DETAIL TB2

L1
L2
L3
L4
L5
L6
L7
L8
L9
L10
L11
L12
L13
L14
L15
N1
N2
N3
N4
N5
N6
N7
N8
N9
N10
N11
N12
N13
N14
N15

DETAIL TBAC

L1
L2
L3
L4
L5
L6
L7
L8
L9
L10
L11
L12
L13
L14
L15
N1
N2
N3
N4
N5
N6
N7
N8
N9
N10
N11
N12
N13
N14
N15

DETAIL TBPPU

1
2
3
4
5
6
7
8
9
10
11
12
13
14
15
16
17
18
19
20
21
22
23
24
25
N1
N2
N3
N4
N5
N6
N7
N8
N9
N10
N11
N12
N13
N14
N15
N16
N17
N18
N19
N20
N21
N22
N23
N24
N25

DETAIL TB4

1500
1501
1503
1504

DETAIL TB-ISO

LEGEND	
TAG	DESCRIPTION
RMTH	MOTOR HIGH TEMPERATURE ALARM RELAY
RPLM	PLC PUMP RUN RELAY
RRST	PUMP RESET AUX RELAY
RPLC	PLC MODE AUX RELAY
RMOR	MOTOR OVERLOAD ALARM RELAY
RBRM	BACKUP SYSTEM RUN RELAY
RUV	UNDER VOLTAGE RELAY
ISO	INTRINSICALLY SAFE RELAY
RFS	PUMP RUN FLOAT SWITCH RELAY
TDFRM	TIMER FLOAT SWITCH RUN RELAY
RMSL	MOTOR SEAL LEAK ALARM RELAY

NOTES:

1. SEE SHEET E1E04 FOR EQUIPMENT AND DEVICE SCHEDULE.

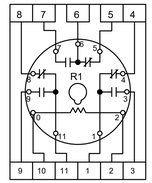

RELAY DETAIL
ITEM C

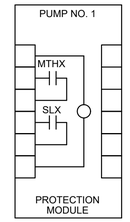

PUMP PROTECTION MODULE
DETAIL, ITEM XX

REVISION	DATE	APP.

HATCH
750 TOWN & COUNTRY BLVD
SUITE 650
HOUSTON, TX 77024
P: 832-930-7670
TX FIRM NUMBER: F-314

SURVEYED BY:
AMANI ENGINEERING, INC.
FB NO. P-6357

STATE OF TEXAS
GUY N SEVERN
105809
LICENSED PROFESSIONAL ENGINEER
7/21/2026

CITY OF HOUSTON
HOUSTON PUBLIC WORKS

LIFT STATION RENEWAL & REPLACEMENT PROJECT
BRAESWOOD N LS

POWER & CONTROL CABINET
EQUIPMENT LAYOUT-II

WBS NUMBER
R-000267-0173-4
DRAWING SCALE
AS NOTED
CITY OF HOUSTON PM
NUPUR KRISHNAN P.E. N.K.

FOR CITY OF HOUSTON USE ONLY

HOUSTON PUBLIC WORKS
ACCEPTED AND FILED
82825
CITY DRAWING NUMBER
Approval Date 08/14/26
HOUSTON TX

E1E06 | SHEET NO. 32 OF 274

PLOTTED: 8/11/2026 10:39 AM
PLOT STYLE: COH.ctb
FILE PATH: \\wsppplot01\d$\Global ProjectWise Plotting - WUS\Queue 3\queue3.dwg

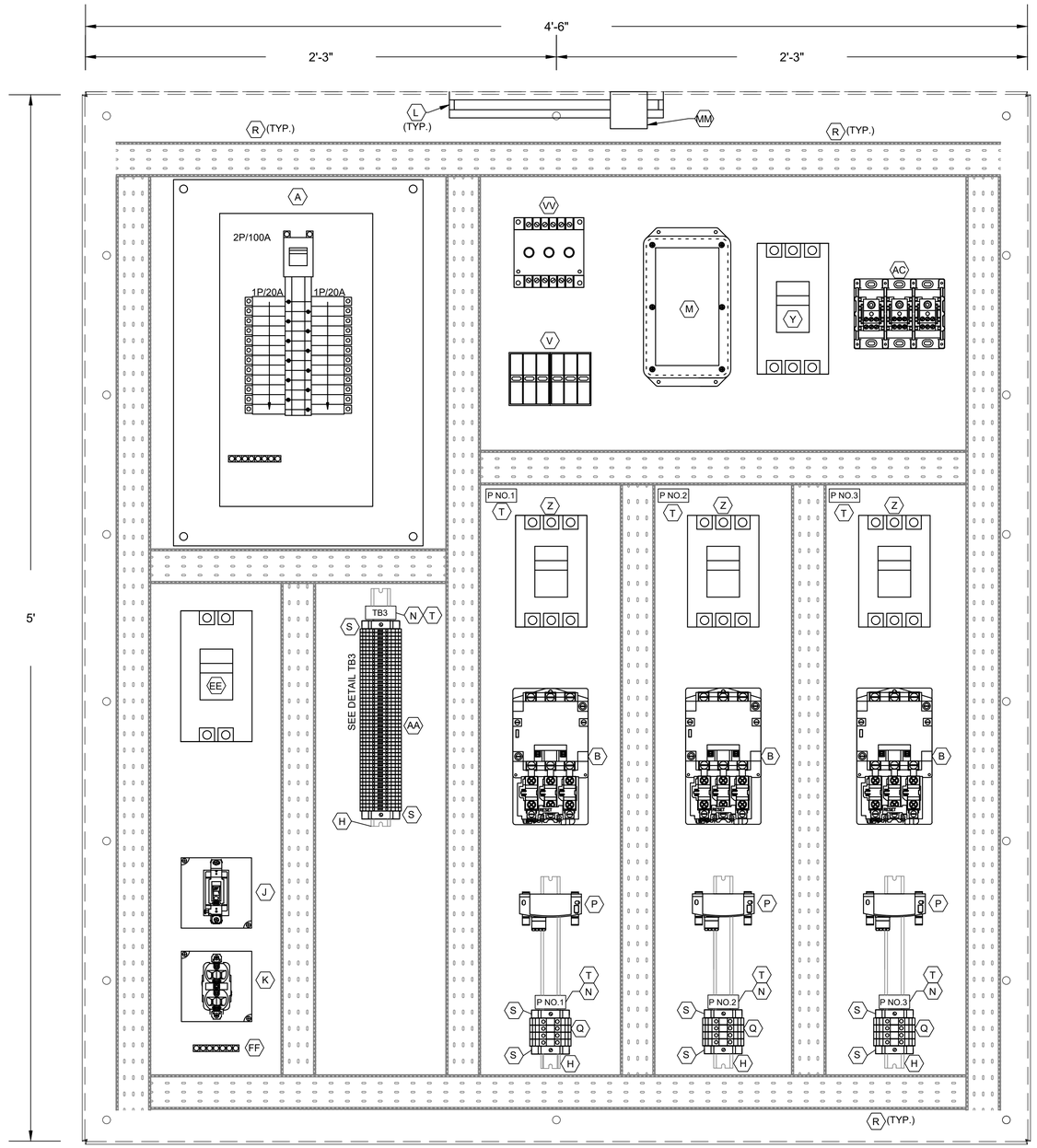

POWER PANEL ELEVATION

SC.: 3"=1'-0"

3
18
L1A
L1N
SPARE
SPARE
103
104
105
106
107
108
110
113
115
116
119
SPARE
203
204
205
206
207
208
210
213
215
216
219
SPARE
303
304
305
306
307
308
310
313
315
316
319
SPARE
SPARE
SPARE
SPARE
SPARE
SPARE
3A
3B
3C

DETAIL TB3

NO.	DATE	REVISION	APP.

NOTES:

1. SEE SHEET E1E04 FOR EQUIPMENT AND DEVICE SCHEDULE.

HATCH
750 TOWN & COUNTRY BLVD
SUITE 650
HOUSTON, TX 77024
P: 832-930-7670
TX FIRM NUMBER: F-314

SURVEYED BY:
AMANI ENGINEERING, INC.
FB NO. P-6357

STATE OF TEXAS
GUY N SEVERN
105809
LICENSED PROFESSIONAL ENGINEER
7/21/2026

CITY OF HOUSTON

HOUSTON PUBLIC WORKS

LIFT STATION RENEWAL & REPLACEMENT PROJECT

BRAESWOOD N LS

POWER & CONTROL CABINET EQUIPMENT LAYOUT-III

WBS NUMBER	FOR CITY OF HOUSTON USE ONLY
R-000267-0173-4	HOUSTON PUBLIC WORKS ACCEPTED AND FILED 82825 CITY DRAWING NUMBER Approval Date 08/14/26 HOUSTON TX
DRAWING SCALE	
NTS	
CITY OF HOUSTON PM	
NUPUR KRISHNAN P.E. N.K.	
SHEET NO. 33 OF 274	

E1E07

PLOTTED: 8/11/2026 10:38 AM
PLOT STYLE: COH.ctb
FILE PATH: \\wusppplot01\d$\Global ProjectWise Plotting - WUS\Queue 1\queue1.dwg

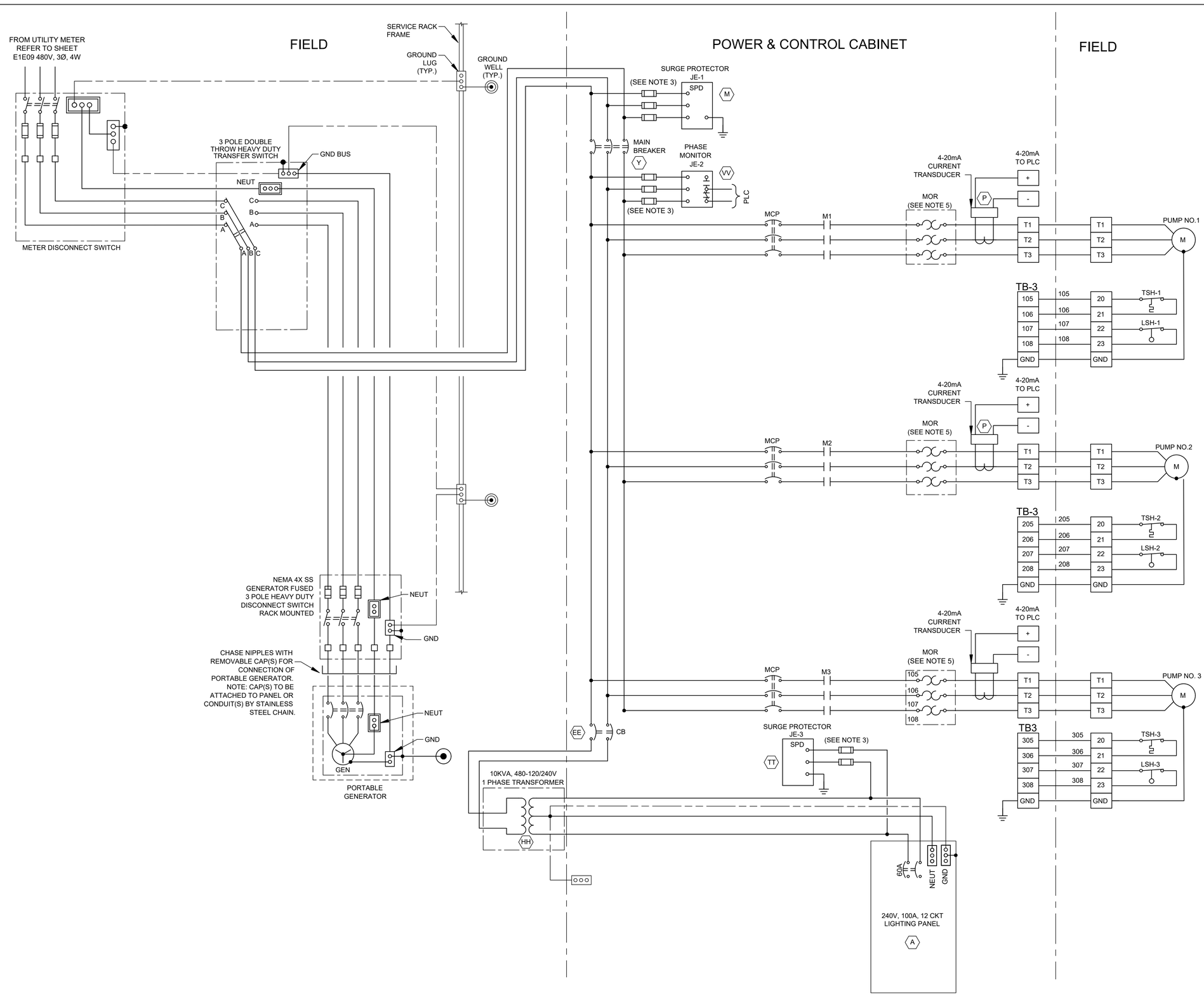

NOTES:

1. UNLESS OTHERWISE INDICATE, ALL DEVICES WITHOUT FURTHER DESIGNATION ARE LOCATED AT THE CONTROL PANEL.
2. SEE SHEET E1E04 FOR EQUIPMENT AND DEVICE SCHEDULE.
3. PROVIDE FUSE SIZE ACCORDING TO MANUFACTURER'S REQUIREMENTS.
4. CONTRACTOR SHALL TERMINATE POWER & CONTROL WIRES PER MANUFACTURER'S REQUIREMENTS.
5. MOTOR OVERLOAD RELAY.

LEGEND

- △ DEVICE OR FIELD TERMINAL LOCATED AT MOTOR
- + DEVICE OR FIELD TERMINAL LOCATED REMOTE
- □ DEVICE OR FIELD TERMINAL LOCATED AT POWER PANEL
- ■ FIELD TERMINAL LOCATED AT CONTROL PANEL
- ▲ REMOTE TERMINAL
- ● DEVICE TERMINAL NO.
- ◆ PC INTERFACE TERMINAL

NO.	DATE	REVISION	APP.

HATCH
750 TOWN & COUNTRY BLVD
SUITE 650
HOUSTON, TX 77024
P: 832-930-7670
TX FIRM NUMBER: F-314

SURVEYED BY:
AMANI ENGINEERING, INC.
FB NO. P-6357

STATE OF TEXAS
GUY N SEVERN
105809
LICENSED
PROFESSIONAL ENGINEER
7/21/2026

CITY OF HOUSTON

HOUSTON PUBLIC WORKS

LIFT STATION RENEWAL & REPLACEMENT PROJECT

BRAESWOOD N LS

INCOMING POWER THREE LINE DIAGRAM

WBS NUMBER
R-000267-0173-4
DRAWING SCALE
AS NOTED
CITY OF HOUSTON PM
NUPUR KRISHNAN P.E. N.K.

FOR CITY OF HOUSTON USE ONLY

HOUSTON PUBLIC WORKS
ACCEPTED AND FILED
82825
CITY DRAWING NUMBER
Approval Date 08/14/26
HOUSTON TX

E1E08

SHEET NO. 34 OF 274

PLOTTED: 8/11/2026 10:39 AM
PLOT STYLE: COH.ctb
FILE PATH: \\wusppplot01\d$\Global ProjectWise Plotting - WUS\Queue 4\queue4.dwg

POWER & CONTROL CABINET

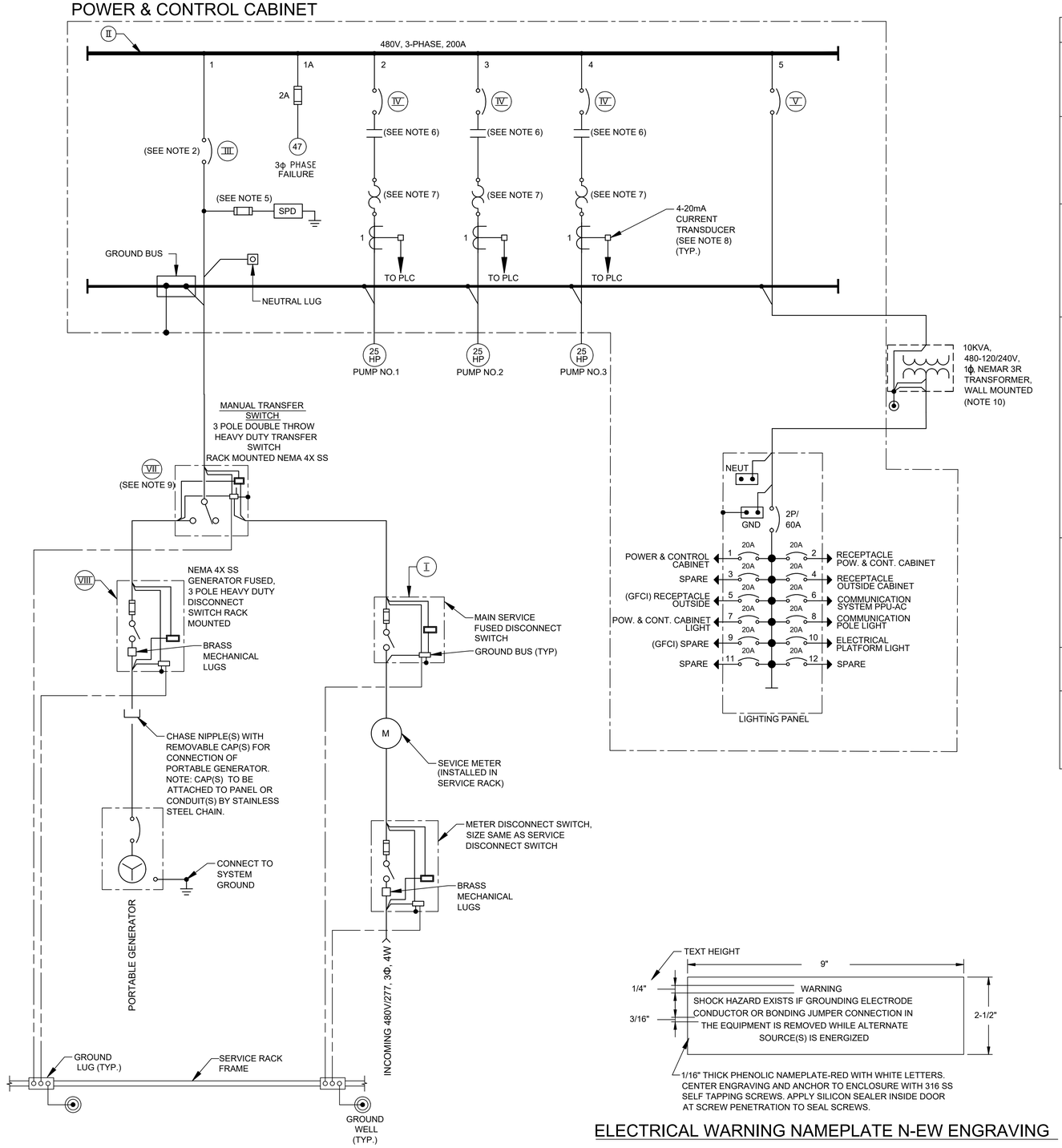

ITEM	CIRCUIT	DESCRIPTION	RATINGS FOR PUMP SIZES INDICATED 3 @ 25HP
I	--	MAIN DISCONNECT SWITCH	
		OPERATING VOLTAGE	480V
		CURRENT RATING	200A
		CURRENT LIMITING FUSES TYPE & SIZE	CLASS J 100 A
II	--	POWER & CONTROL CABINET POWER DISTRIBUTION BLOCK	
		OPERATING VOLTAGE	480V
		CURRENT RATING	175A
		NEUTRAL SIZE & TYPE	200A LUG
		BUS BRACING	42KA SYM
III	1	MAIN BREAKER	
		3 POLE - TYPE	MOLDED CASE
		MOUNTING	FIXED
		OPERATING VOLTAGE	480V
		FRAME SIZE	150A
		TRIP SETTING	100A
		INTERRUPT CAPACITY	42KA SYM
		OPTIONS	NONE
IV	2 3 4	PUMP MOTOR STARTERS	
		QUANTITY	3
		MOUNTING	FIXED
		SHORT CIRCUIT PROTECTION	
		3 POLE - TYPE	MCP
		OPERATING VOLTAGE	480V
		FRAME SIZE	150A
		TRIP SETTING	60A
		INTERRUPT CAPACITY	42KA SYM
		MOTOR STARTING CONTACTOR	
		3 POLE - TYPE	AIR
		OPERATING VOLTAGE	480V
		SIZE	NEMA 3
		OVERLOAD PROTECTION TYPE	SOLID STATE MOR
V	5	LIGHTING TRANSFORMER FEEDER BREAKER	
		NO. OF POLES	2
		TYPE	MOLDED CASE
		OPERATING VOLTAGE	480V
		FRAME SIZE	100A
		TRIP SETTING	30A
		INTERRUPT CAPACITY	42KA SYM
VII	--	MANUAL TRANSFER SWITCH	3P, 4W SN
		OPERATING VOLTAGE	480V
		CURRENT RATING	200A
VIII	--	GENERATOR FUSED DISCONNECT SWITCH	3P, 4W SN
		OPERATING VOLTAGE	480V
		CURRENT RATING	200A
		CURRENT LIMITING FUSES TYPE & SIZE	CLASS J 100A

NOTES:

1. FOR DESCRIPTION AND RATINGS OF ITEMS INDICATED WITH ROMAN NUMERAL FLAGS, SEE DEVICE RATINGS SCHEDULE.
2. PROVIDE BREAKER WITH KIRK KEY INTER-CONNECTED WITH GENERATOR/TRANSFER BREAKER.
3. CONTRACTOR SHALL VERIFY ACTUAL AMPERAGES OF MOTORS AND SIZE STARTERS, MOTOR CIRCUIT PROTECTORS, ETC. ACCORDINGLY.
4. REFER TO SPEC SECTION 16120 FOR CONDUCTOR COLOR CODE.
5. PROVIDE FUSE SIZE ACCORDING TO MANUFACTURER'S SPECIFICATIONS.
6. STARTER NEMA SIZE 2 IS MINIMUM AND NEMA SIZE 3 OR GREATER SHALL BE VACUUM TYPE.
7. MOTOR OVERLOAD RELAY.
8. PROVIDE 5A PRIMARY TO 4-20mA CURRENT TRANSDUCER.
9. PROVIDE A NORMALLY OPEN (NO) AUXILIARY CONTACT FOR BOTH ON POSITIONS.
10. TRANSFORMER TO BE MOUNTED ON CABINET EXTERIOR SIDE.

NO.	DATE	REVISION	APP.

ELECTRICAL WARNING NAMEPLATE N-EW ENGRAVING

LOAD CALCULATION			
ITEM	DESCRIPTION	HP	FLI*
1	PUMP NO. 1	25HP	30A
2	PUMP NO. 2	25HP	30A
3	PUMP NO. 3	25HP	0
4	LIGHTING PANEL		15A
SUBTOTAL			75A
25% OF LARGEST MOTOR LOAD			8A
MINIMUM AMPACITY @480V,3Φ			83A

* BASED ON SELECTED PUMP MFG DATA

HATCH
750 TOWN & COUNTRY BLVD
SUITE 650
HOUSTON, TX 77024
P: 832-930-7670
TX FIRM NUMBER: F-314

SURVEYED BY:
AMANI ENGINEERING, INC.
FB NO. P-6357

STATE OF TEXAS
GUY N SEVERN
105809
LICENSED PROFESSIONAL ENGINEER
7/21/2026

CITY OF HOUSTON
HOUSTON PUBLIC WORKS

LIFT STATION RENEWAL & REPLACEMENT PROJECT
BRAESWOOD N LS

SINGLE LINE DIAGRAM

WBS NUMBER
R-000267-0173-4
DRAWING SCALE
NTS
CITY OF HOUSTON PM
NUPUR KRISHNAN P.E. N.K.

FOR CITY OF HOUSTON USE ONLY

HOUSTON PUBLIC WORKS
ACCEPTED AND FILED
82825
CITY DRAWING NUMBER
Approval Date 08/14/26
HOUSTON TX

PLOTTED: 8/11/2026 10:35 AM
PLOT STYLE: COH.ctb
FILE PATH: \\wuspplot01\d$\Global ProjectWise Plotting - WUS\Queue 1\queue1.dwg

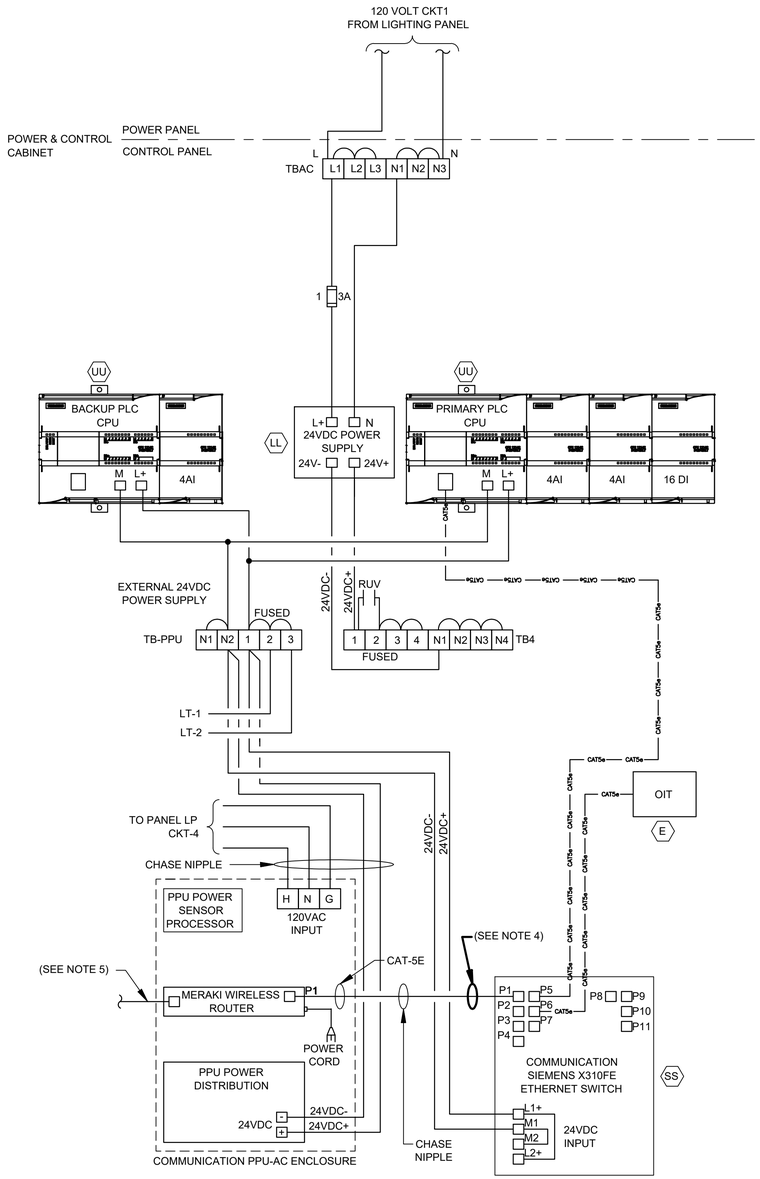

CONTROL POWER &
COMMUNICATIONS WIRING

DIAGRAM

NTS

(SEE NOTE 3)

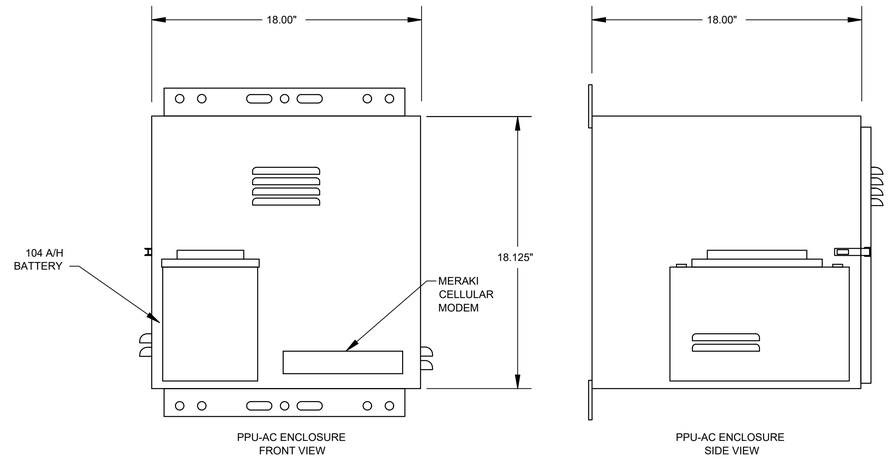

PPU-AC
CONTROL ENCLOSURE

ELEVATION

NTS

NOTES:

1. REFER TO SPEC SECTION 16120 FOR CONDUCTOR COLOR CODE.
2. THE PLC POWER SUPPLY SHALL FEED THE 24VDC I/O.
3. COMMUNICATION PPU-AC & SCADA SHALL BE PROVIDED BY CONTRACTOR INCLUDING TO RUN CONDUITS & WIRES.
4. ETHERNET CABLE FOR MERAKI CELLULAR ROUTER (P1).
5. POE CABLE TO RADIO.

NO.	DATE	REVISION	APP.

HATCH
750 TOWN & COUNTRY BLVD
SUITE 650
HOUSTON, TX 77024
P: 832-930-7670
TX FIRM NUMBER: F-314

SURVEYED BY:
AMANI ENGINEERING, INC.
FB NO. P-6357

STATE OF TEXAS
GUY N SEVERN
105809
LICENSED PROFESSIONAL ENGINEER
7/21/2026

CITY OF HOUSTON

HOUSTON PUBLIC WORKS

LIFT STATION RENEWAL & REPLACEMENT PROJECT

BRAESWOOD N LS

COMMUNICATION DIAGRAM

WBS NUMBER
R-000267-0173-4
DRAWING SCALE
AS NOTED
CITY OF HOUSTON PM
NUPUR KRISHNAN P.E. N.K.

FOR CITY OF HOUSTON USE ONLY

HOUSTON PUBLIC WORKS
ACCEPTED AND FILED
82825
CITY DRAWING NUMBER
Approval Date 08/14/26
HOUSTON TX

E1E10

SHEET NO. 36 OF 274

PLOTTED: 8/11/2026 10:39 AM
PLOT STYLE: COH.ctb
FILE PATH: \\wuspplot01\d$\Global ProjectWise Plotting - WUS\Queue 2\queue2.dwg

PLOTTED: 8/11/2026 10:42 AM
PLOT STYLE: COH.ctb
FILE PATH: \\wusppplot01\d$\Global ProjectWise Plotting - WUS\Queue 5\queue5.dwg

HMI

POWER & CONTROL CABINET (PLC)

POWER & CONTROL CABINET

	PUMP NO. 1								PUMP NO. 2								PUMP NO. 3								PLC		BACKUP PLC		
	SEAL FAIL ALARM	MOTOR OVERLOAD ALARM	MOTOR CURRENT	HIGH TEMP ALARM	IN HAND	IN AUTO	ON/OFF	START/ STOP	SEAL FAIL ALARM	MOTOR OVERLOAD ALARM	MOTOR CURRENT	HIGH TEMP ALARM	IN HAND	IN AUTO	ON/OFF	START/ STOP	SEAL FAIL ALARM	MOTOR OVERLOAD ALARM	MOTOR CURRENT	HIGH TEMP ALARM	IN HAND	IN AUTO	ON/OFF	START/ STOP	ALARMS RESET	FLOAT HIGH-HIGH WETWELL LEVEL	PUMP NO. 1 START/ STOP	PUMP NO. 2 START/ STOP	PUMP NO. 3 START/ STOP
	MA	MO	II	TH	HI	IA	YFS	YCS	MA	MO	II	TH	HI	IA	YFS	YCS	MA	MO	II	TH	HI	IA	YFS	YCS	RE	LAHH	YCS	YCS	YCS
	1	1	1	1	1	1	1	1	2	2	2	2	2	2	2	2	3	3	3	3	3	3	3	3	1	1A	1A	2A	3A

PUMP NO. 1 H/O/A RUN
PUMP NO. 2 H/O/A RUN
PUMP NO. 3 H/O/A RUN
PRIMARY PLC
BACKUP PLC
ALARMS RESET
OIT
SHEET E1E12

E1E12
E1E12

WET WELL

LT 1
LE 1
LT 2
LE 2

LSH 1A
TSH 1A
FS2 HIGH-HIGH LEVEL FLOAT SWITCH
PUMP NO.1

LSH 2A
TSH 2A
PUMP NO.2

LSH 3A
TSH 3A
FS1 HIGH LEVEL FLOAT SWITCH
PUMP NO.3

AIR-RELEASE
XX"-DIP
XX"-DIP
XX"-DIP
XX"-DIP
XX"-DIP
DISCHARGE

NO.	DATE	REVISION	APP.

HATCH
750 TOWN & COUNTRY BLVD
SUITE 650
HOUSTON, TX 77024
P: 832-930-7670
TX FIRM NUMBER: F-314

SURVEYED BY:
AMANI ENGINEERING, INC.
FB NO. P-6357

STATE OF TEXAS
GUY N SEVERN
105809
LICENSED PROFESSIONAL ENGINEER
7/21/2026

CITY OF HOUSTON
HOUSTON PUBLIC WORKS

LIFT STATION RENEWAL & REPLACEMENT PROJECT
BRAESWOOD N LS

PROCESS & INSTRUMENTATION DIAGRAM-I

WBS NUMBER	FOR CITY OF HOUSTON USE ONLY
R-000267-0173-4	HOUSTON PUBLIC WORKS ACCEPTED AND FILED 82825 CITY DRAWING NUMBER Approval Date 08/14/26 HOUSTON TX
DRAWING SCALE	
NTS	
CITY OF HOUSTON PM	
NUPUR KRISHNAN P.E. N.K.	
SHEET NO. 37 OF 274	

E1E11

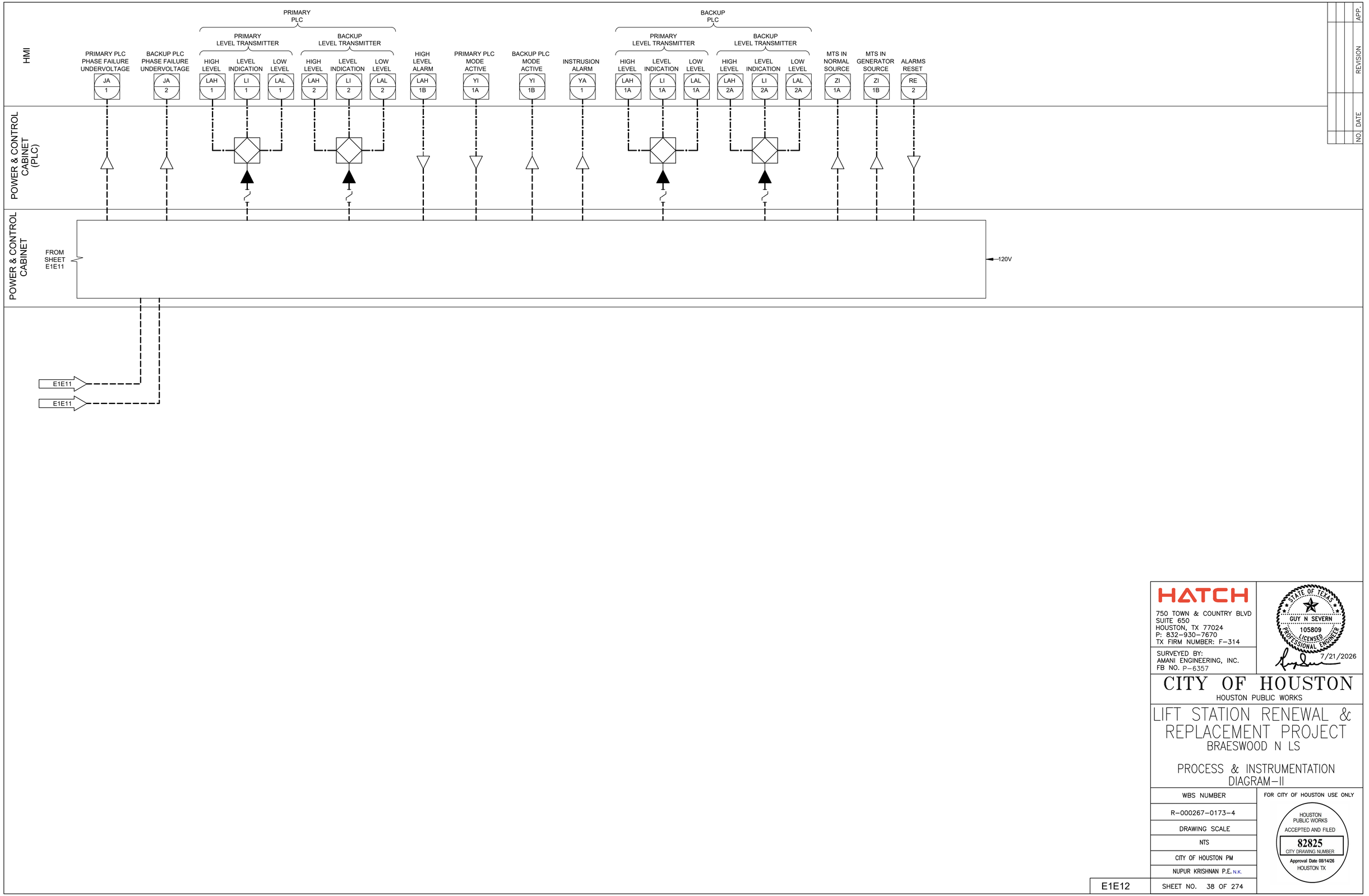

PLOTTED: 8/11/2026 10:44 AM

PLOT STYLE: COH.ctb

FILE PATH: \\wusppplot01\d$\Global ProjectWise Plotting - WUS\Queue 4\queue4.dwg

HATCH
750 TOWN & COUNTRY BLVD
SUITE 650
HOUSTON, TX 77024
P: 832-930-7670
TX FIRM NUMBER: F-314

SURVEYED BY:
AMANI ENGINEERING, INC.
FB NO. P-6357

STATE OF TEXAS
GUY N SEVERN
105809
LICENSED
PROFESSIONAL ENGINEER
7/21/2026

CITY OF HOUSTON

HOUSTON PUBLIC WORKS

LIFT STATION RENEWAL & REPLACEMENT PROJECT

BRAESWOOD N LS

PROCESS & INSTRUMENTATION DIAGRAM-II

WBS NUMBER
R-000267-0173-4
DRAWING SCALE
NTS
CITY OF HOUSTON PM
NUPUR KRISHNAN P.E. N.K.
SHEET NO. 38 OF 274

FOR CITY OF HOUSTON USE ONLY

HOUSTON PUBLIC WORKS
ACCEPTED AND FILED
82825
CITY DRAWING NUMBER
Approval Date 08/14/26
HOUSTON TX

E1E12

PLOTTED: 8/11/2026 10:38 AM
PLOT STYLE: COH.ctb
FILE PATH: \\wusppplot01\d$\Global ProjectWise Plotting - WUS\Queue 5\queue5.dwg

FIELD

POWER & CONTROL CABINET

INTERIOR PANEL

PLC

(NOTE 4)

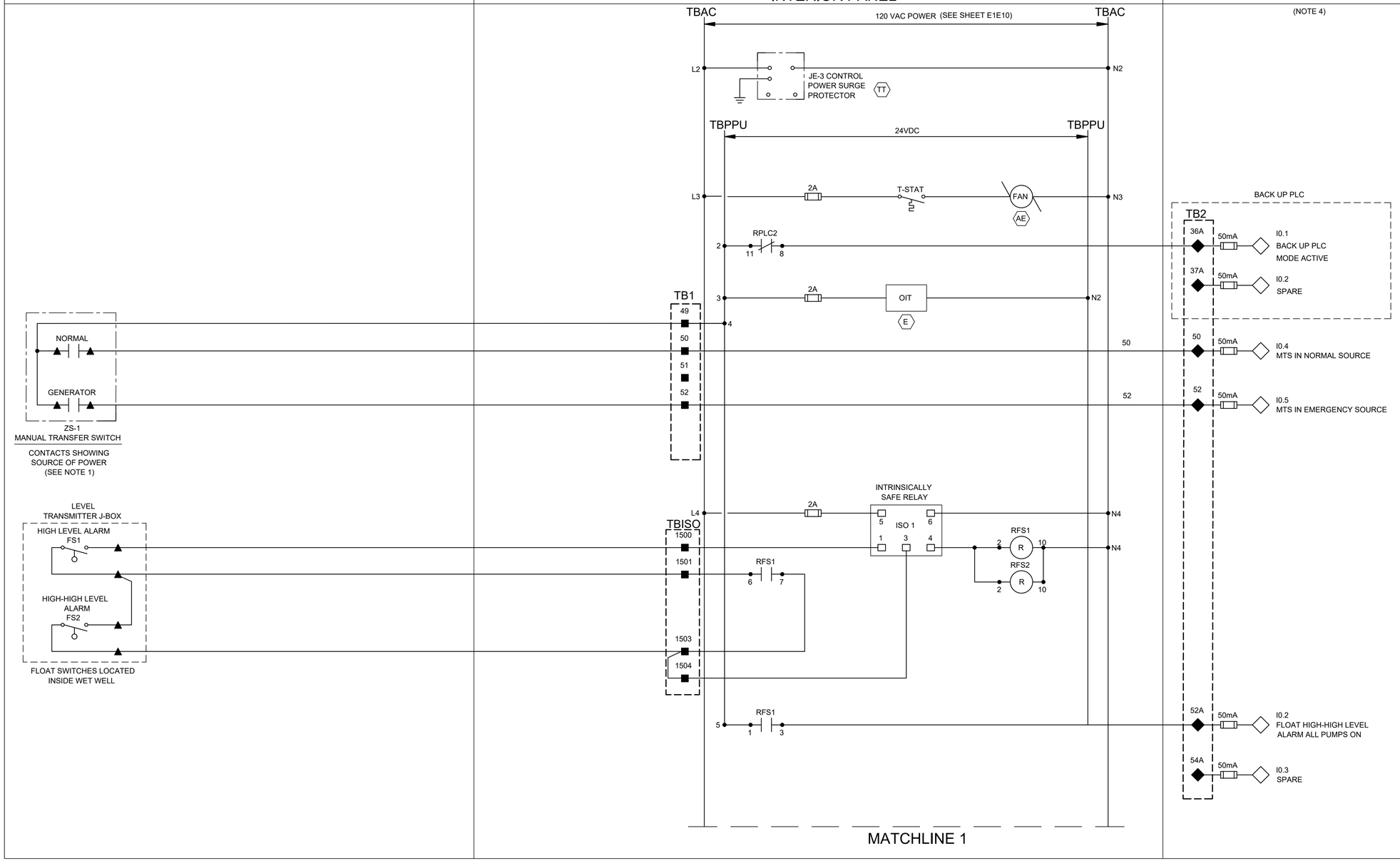

NOTES:

1. PROVIDE MANUAL TRANSFER SWITCH DRY CONTACT.
2. ALL FLOAT CONTROL CIRCUIT WIRES COLOR SHALL BE YELLOW.
3. SEE SHEET E1E04 FOR EQUIPMENT AND DEVICE SCHEDULE.
4. PRIMARY PLC UNLESS INDICATED OTHERWISE.

NO.	DATE	REVISION	APP.

LEGEND

- △ DEVICE OR FIELD TERMINAL LOCATED AT MOTOR
- ✳ DEVICE OR FIELD TERMINAL LOCATED REMOTE
- □ DEVICE OR FIELD TERMINAL LOCATED AT MCC/POWER PANEL
- ■ FIELD TERMINAL LOCATED AT CONTROL PANEL
- ▲ REMOTE TERMINAL
- ● DEVICE TERMINAL NO.
- ◆ PLC INTERFACE TERMINAL

HATCH
750 TOWN & COUNTRY BLVD
SUITE 650
HOUSTON, TX 77024
P: 832-930-7670
TX FIRM NUMBER: F-314

SURVEYED BY:
AMANI ENGINEERING, INC.
FB NO. P-6357

STATE OF TEXAS
GUY N SEVERN
105809
LICENSED PROFESSIONAL ENGINEER
7/21/2026

CITY OF HOUSTON

HOUSTON PUBLIC WORKS

LIFT STATION RENEWAL & REPLACEMENT PROJECT

BRAESWOOD N LS

POWER & CONTROL CABINET CONTROL WIRING DIAGRAM-I

WBS NUMBER	FOR CITY OF HOUSTON USE ONLY
R-000267-0173-4	HOUSTON PUBLIC WORKS ACCEPTED AND FILED 82825 CITY DRAWING NUMBER Approval Date 08/14/26 HOUSTON TX
DRAWING SCALE	
NTS	
CITY OF HOUSTON PM	
NUPUR KRISHNAN P.E. N.K.	
SHEET NO. 39 OF 274	

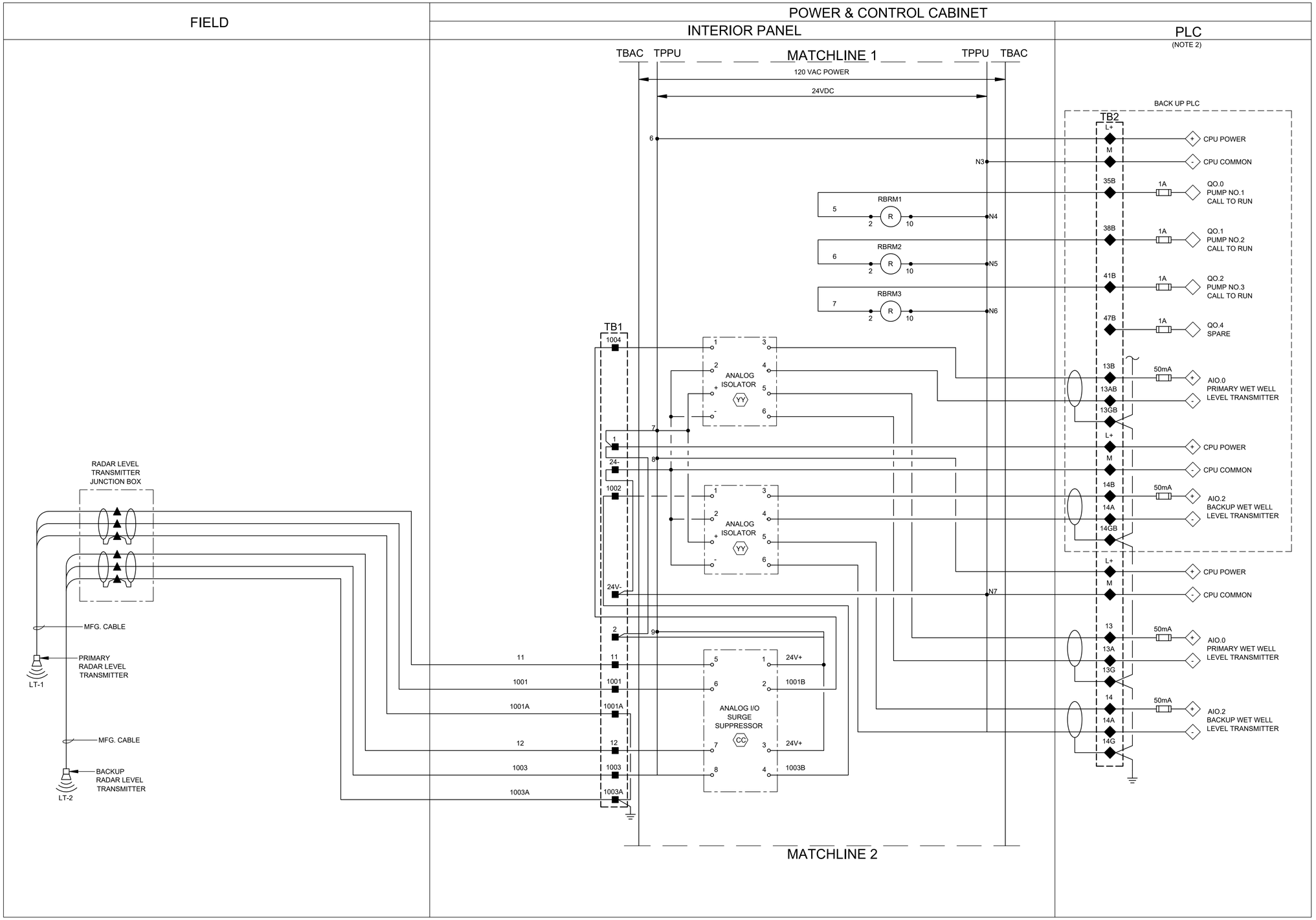

NOTES:

1. SEE SHEET E1E04 FOR EQUIPMENT AND DEVICE SCHEDULE.
2. PRIMARY PLC UNLESS INDICATED OTHERWISE.

LEGEND

- △ DEVICE OR FIELD TERMINAL LOCATED AT MOTOR
- ✳ DEVICE OR FIELD TERMINAL LOCATED REMOTE
- □ DEVICE OR FIELD TERMINAL LOCATED AT MCC/POWER PANEL
- ■ FIELD TERMINAL LOCATED AT CONTROL PANEL
- ▲ REMOTE TERMINAL
- ● DEVICE TERMINAL NO.
- ◆ PLC INTERFACE TERMINAL

HATCH
750 TOWN & COUNTRY BLVD
SUITE 650
HOUSTON, TX 77024
P: 832-930-7670
TX FIRM NUMBER: F-314

SURVEYED BY:
AMANI ENGINEERING, INC.
FB NO. P-6357

STATE OF TEXAS
GUY N SEVERN
105809
LICENSED
PROFESSIONAL ENGINEER
7/21/2026

CITY OF HOUSTON

HOUSTON PUBLIC WORKS

LIFT STATION RENEWAL & REPLACEMENT PROJECT

BRAESWOOD N LS

POWER & CONTROL CABINET
CONTROL WIRING DIAGRAM-II

WBS NUMBER	FOR CITY OF HOUSTON USE ONLY
R-000267-0173-4	HOUSTON PUBLIC WORKS ACCEPTED AND FILED
DRAWING SCALE	82825 CITY DRAWING NUMBER
AS NOTED	Approval Date 08/14/26 HOUSTON TX
CITY OF HOUSTON PM	
NUPUR KRISHNAN P.E. N.K.	
SHEET NO. 40 OF 274	

E1E14

NO.	DATE	REVISION	APP.

PLOTTED: 8/11/2026 10:41 AM
PLOT STYLE: COH.ctb
FILE PATH: \\wusppplot01\d$\Global ProjectWise Plotting - WUS\Queue 1\queue1.dwg

PLOT STYLE: COH.ctb
PLOTTED: 8/11/2026 10:44 AM
FILE PATH: \\wuspplot01\d$\Global ProjectWise Plotting - WUS\Queue 1\queue1.dwg

FIELD	POWER & CONTROL CABINET			
	POWER SIDE BACK PANEL	DOOR PANEL	INTERIOR PANEL	PLC (NOTE 2)

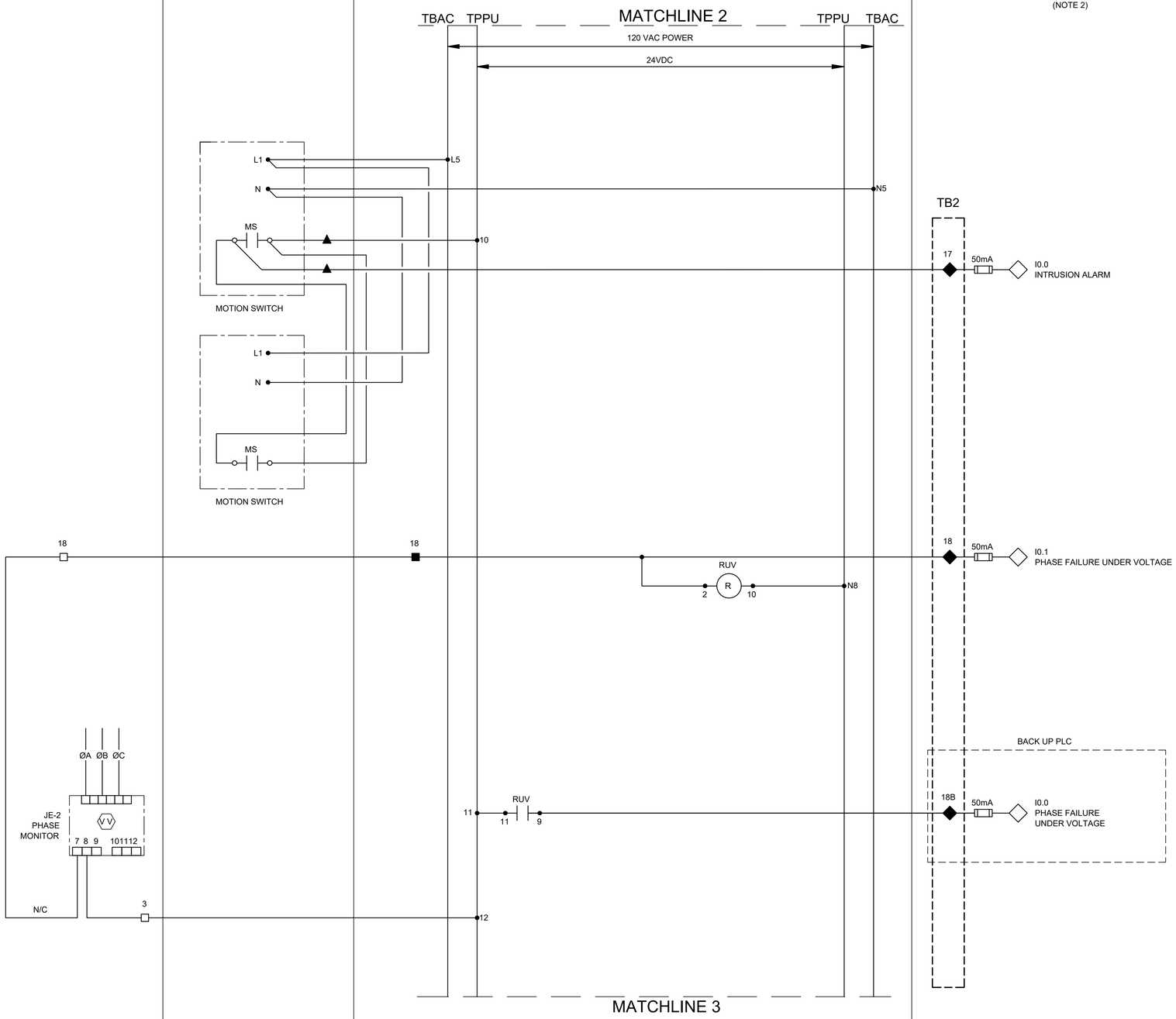

NOTES:

1. PROVIDE ONE LIMIT SWITCH PER EXTERIOR CONTROL PANEL AND POWER PANEL DOOR, WIRED IN PARALLEL.
2. PRIMARY PLC UNLESS INDICATED OTHERWISE.

LEGEND

- △ DEVICE OR FIELD TERMINAL LOCATED AT MOTOR
- ✳ DEVICE OR FIELD TERMINAL LOCATED REMOTE
- □ DEVICE OR FIELD TERMINAL LOCATED AT MCC/POWER PANEL
- ■ FIELD TERMINAL LOCATED AT CONTROL PANEL
- ▲ REMOTE TERMINAL
- ● DEVICE TERMINAL NO.
- ◆ PLC INTERFACE TERMINAL

NO.	DATE	REVISION	APP.

HATCH
750 TOWN & COUNTRY BLVD
SUITE 650
HOUSTON, TX 77024
P: 832-930-7670
TX FIRM NUMBER: F-314

SURVEYED BY:
AMANI ENGINEERING, INC.
FB NO. P-6357

STATE OF TEXAS
GUY N SEVERN
105809
LICENSED
PROFESSIONAL ENGINEER
7/21/2026

CITY OF HOUSTON
HOUSTON PUBLIC WORKS

LIFT STATION RENEWAL & REPLACEMENT PROJECT
BRAESWOOD N LS

POWER & CONTROL CABINET CONTROL WIRING DIAGRAM-III

WBS NUMBER
R-000267-0173-4
DRAWING SCALE
AS NOTED
CITY OF HOUSTON PM
NUPUR KRISHNAN P.E. N.K.

FOR CITY OF HOUSTON USE ONLY

HOUSTON PUBLIC WORKS
ACCEPTED AND FILED
82825
CITY DRAWING NUMBER
Approval Date 08/14/26
HOUSTON TX

E1E15

PLOTTED: 8/11/2026 10:42 AM
PLOT STYLE: COH.ctb
FILE PATH: \\wuspplot01\d$\Global ProjectWise Plotting - WUS\Queue 3\queue3.dwg

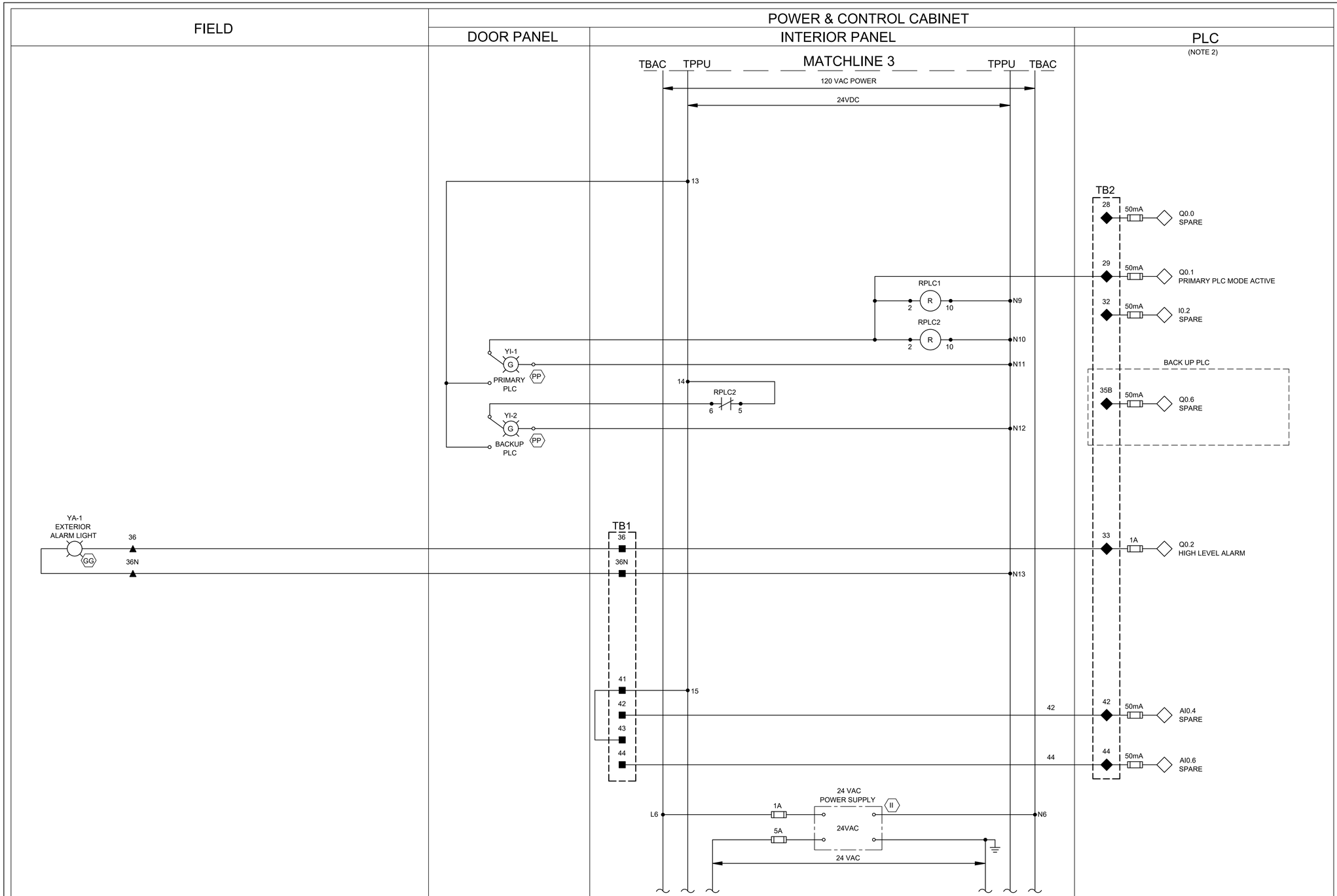

NOTES:

1. SEE SHEET E1E04 FOR EQUIPMENT AND DEVICE SCHEDULE.
2. PRIMARY PLC UNLESS INDICATED OTHERWISE.

NO.	DATE	REVISION	APP.

LEGEND

- △ DEVICE OR FIELD TERMINAL LOCATED AT MOTOR
- ✳ DEVICE OR FIELD TERMINAL LOCATED REMOTE
- □ DEVICE OR FIELD TERMINAL LOCATED AT MCC/POWER PANEL
- ■ FIELD TERMINAL LOCATED AT CONTROL PANEL
- ▲ REMOTE TERMINAL
- ● DEVICE TERMINAL NO.
- ◆ PLC INTERFACE TERMINAL

HATCH
750 TOWN & COUNTRY BLVD
SUITE 650
HOUSTON, TX 77024
P: 832-930-7670
TX FIRM NUMBER: F-314

SURVEYED BY:
AMANI ENGINEERING, INC.
FB NO. P-6357

STATE OF TEXAS
GUY N SEVERN
105809
LICENSED
PROFESSIONAL ENGINEER
7/21/2026

CITY OF HOUSTON
HOUSTON PUBLIC WORKS

LIFT STATION RENEWAL & REPLACEMENT PROJECT
BRAESWOOD N LS

CONTROL PANEL
CONTROL WIRING DIAGRAM-IV

WBS NUMBER
R-000267-0173-4
DRAWING SCALE
AS NOTED
CITY OF HOUSTON PM
NUPUR KRISHNAN P.E. N.K.
SHEET NO. 42 OF 274

FOR CITY OF HOUSTON USE ONLY

HOUSTON PUBLIC WORKS
ACCEPTED AND FILED
82825
CITY DRAWING NUMBER
Approval Date 08/14/26
HOUSTON TX

E1E16

FIELD | POWER & CONTROL CABINET: POWER SIDE BACK PANEL | DOOR PANEL | INTERIOR PANEL | PLC

TB3 | TB1 | TBAC | TB4 | 120 VAC POWER | 24 VDC | 24 VAC | TB2

120 VAC POWER
24 VDC
3A
L1A
L1N

TSH-1 MOTOR TEMP SWITCH
LSH-1 SEAL LEAK DETECTOR
TERMINAL JUNCTION BOX
PUMP NO.1
REFER TO SHEET E1E08
4-20mA CURRENT TRANSDUCER
IE-1 MOTOR OVERLOAD RELAY (MOR) (SEE NOTE 1)
HS-1A RESET
TO SHEET E1E18
HS-1 H-O-A
PUMP NO. 1 PROTECTION MODULE
LAH-1 SL1
TAH-1 MTH1
RRST1
RMSL1
RMTH1
RFS1
TDFRM1
RMOR1
RPLC1
RBRM1
RPLM1
YI-1 RUN

TB2		
103	1A	Q0.4 ALARM RESET
104	50mA	I0.6 ALARM RESET
109	50mA	I1.1 PUMP NO.1 HIGH TEMP ALARM
122	50mA	AI0.8 PUMP NO.1 MOTOR CURRENT
123	50mA	I3.3 PUMP NO.1 MOTOR OVERLOAD
115	50mA	I3.0 PUMP NO.1 IN HAND
121	50mA	I3.1 PUMP NO.1 IN AUTO
118	1A	Q0.7 PUMP NO.1 PLC START/STOP
120	50mA	I1.0 PUMP NO.1 RUN
110	50mA	I3.2 PUMP NO.1 SEAL FAILURE ALARM

NOTES:

1. MOTOR OVERLOAD RELAY OUTPUT CONTACT SHOWN IS NORMALLY CLOSED WHEN RELAY IS DE-ENERGIZED, OPEN WHEN ENERGIZED, AND CLOSED WHEN IN ALARM. VERIFY OPERATION OF RELAY PROVIDED AND ADJUST CONNECTION OF RMOR AUXILIARY RELAYS.
2. SEE SHEET E1E04 FOR EQUIPMENT AND DEVICE SCHEDULE.
3. ALL FLOAT CONTROL CIRCUIT WIRES COLOR SHALL BE YELLOW.

LEGEND

- △ DEVICE OR FIELD TERMINAL LOCATED AT MOTOR
- ✳ DEVICE OR FIELD TERMINAL LOCATED REMOTE
- □ DEVICE OR FIELD TERMINAL LOCATED AT MCC/POWER PANEL
- ■ FIELD TERMINAL LOCATED AT CONTROL PANEL
- ▲ REMOTE TERMINAL
- ● DEVICE TERMINAL NO.
- ◆ PLC INTERFACE TERMINAL

NO.	DATE	REVISION	APP.

HATCH
750 TOWN & COUNTRY BLVD
SUITE 650
HOUSTON, TX 77024
P: 832-930-7670
TX FIRM NUMBER: F-314

SURVEYED BY:
AMANI ENGINEERING, INC.
FB NO. P-6357

STATE OF TEXAS
GUY N SEVERN
105809
LICENSED
PROFESSIONAL ENGINEER
7/21/2026

CITY OF HOUSTON
HOUSTON PUBLIC WORKS

LIFT STATION RENEWAL & REPLACEMENT PROJECT
BRAESWOOD N LS

PUMP NO.1
CONTROL WIRING DIAGRAM

WBS NUMBER	FOR CITY OF HOUSTON USE ONLY
R-000267-0173-4	HOUSTON PUBLIC WORKS ACCEPTED AND FILED 82825 CITY DRAWING NUMBER Approval Date 08/14/26 HOUSTON TX
DRAWING SCALE	
NTS	
CITY OF HOUSTON PM	
NUPUR KRISHNAN P.E. N.K.	
SHEET NO. 43 OF 274	

E1E17

PLOTTED: 8/11/2026 10:46 AM
PLOT STYLE: COH.ctb
FILE PATH: \\wusppplot01\d$\Global ProjectWise Plotting - WUS\Queue 3\queue3.dwg

FILE PATH: \\wusppplot01\d$\Global ProjectWise Plotting - WUS\Queue 2\queue2.dwg
PLOT STYLE: COH.ctb
PLOTTED: 8/11/2026 10:42 AM

FIELD | POWER & CONTROL CABINET: POWER SIDE BACK PANEL | DOOR PANEL | INTERIOR PANEL | PLC

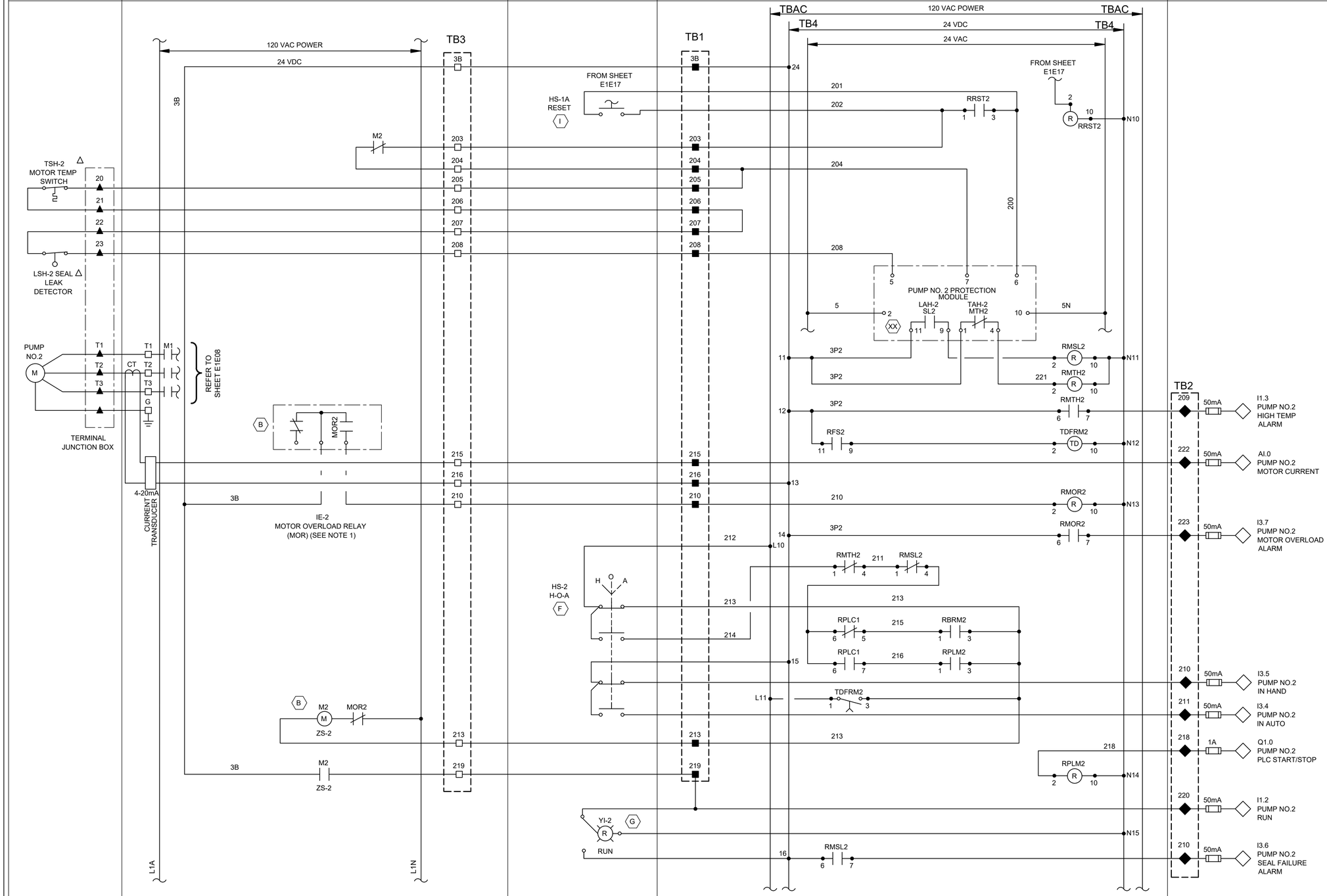

NOTES:

1. MOTOR OVERLOAD RELAY OUTPUT CONTACT SHOWN IS NORMALLY CLOSED WHEN RELAY IS DE-ENERGIZED, OPEN WHEN ENERGIZED, AND CLOSED WHEN IN ALARM. VERIFY OPERATION OF RELAY PROVIDED AND ADJUST CONNECTION OF RMOR AUXILIARY RELAYS.
2. SEE SHEET E1E04 FOR EQUIPMENT AND DEVICE SCHEDULE.
3. ALL FLOAT CONTROL CIRCUIT WIRES COLOR SHALL BE YELLOW.

LEGEND

- △ DEVICE OR FIELD TERMINAL LOCATED AT MOTOR
- ✳ DEVICE OR FIELD TERMINAL LOCATED REMOTE
- □ DEVICE OR FIELD TERMINAL LOCATED AT MCC/POWER PANEL
- ■ FIELD TERMINAL LOCATED AT CONTROL PANEL
- ▲ REMOTE TERMINAL
- ● DEVICE TERMINAL NO.
- ◆ PLC INTERFACE TERMINAL

NO.	DATE	REVISION	APP.

HATCH
750 TOWN & COUNTRY BLVD
SUITE 650
HOUSTON, TX 77024
P: 832-930-7670
TX FIRM NUMBER: F-314

SURVEYED BY:
AMANI ENGINEERING, INC.
FB NO. P-6357

STATE OF TEXAS — GUY N SEVERN — 105809 — LICENSED PROFESSIONAL ENGINEER — 7/21/2026

CITY OF HOUSTON
HOUSTON PUBLIC WORKS

LIFT STATION RENEWAL & REPLACEMENT PROJECT
BRAESWOOD N LS

PUMP NO.2 CONTROL WIRING DIAGRAM

WBS NUMBER	FOR CITY OF HOUSTON USE ONLY
R-000267-0173-4	HOUSTON PUBLIC WORKS ACCEPTED AND FILED 82825 CITY DRAWING NUMBER Approval Date 08/14/26 HOUSTON TX
DRAWING SCALE	
NTS	
CITY OF HOUSTON PM	
NUPUR KRISHNAN P.E. N.K.	
SHEET NO. 44 OF 274	

E1E18

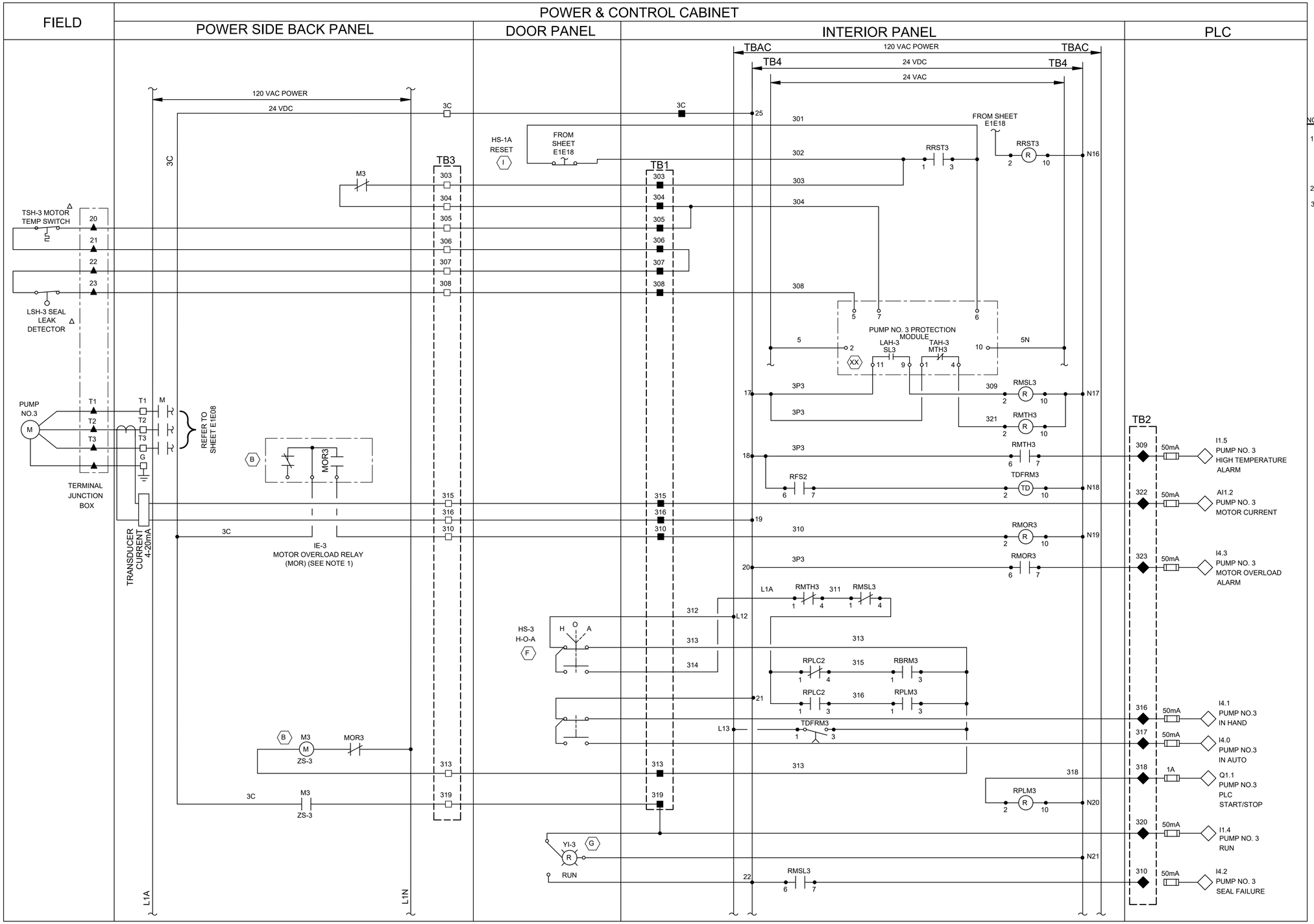

NOTES:

1. MOTOR OVERLOAD RELAY OUTPUT CONTACT SHOWN IS NORMALLY CLOSED WHEN RELAY IS DE-ENERGIZED, OPEN WHEN ENERGIZED, AND CLOSED WHEN IN ALARM. VERIFY OPERATION OF RELAY PROVIDED AND ADJUST CONNECTION OF RMOR AUXILIARY RELAYS.
2. SEE SHEET E1E04 FOR EQUIPMENT AND DEVICE SCHEDULE.
3. ALL FLOAT CONTROL CIRCUIT WIRES COLOR SHALL BE YELLOW.

LEGEND

- △ DEVICE OR FIELD TERMINAL LOCATED AT MOTOR
- ✳ DEVICE OR FIELD TERMINAL LOCATED REMOTE
- □ DEVICE OR FIELD TERMINAL LOCATED AT MCC/POWER PANEL
- ■ FIELD TERMINAL LOCATED AT CONTROL PANEL
- ▲ REMOTE TERMINAL
- ● DEVICE TERMINAL NO.
- ◆ PLC INTERFACE TERMINAL

NO.	DATE	REVISION	APP.

HATCH
750 TOWN & COUNTRY BLVD
SUITE 650
HOUSTON, TX 77024
P: 832-930-7670
TX FIRM NUMBER: F-314

SURVEYED BY:
AMANI ENGINEERING, INC.
FB NO. P-6357

STATE OF TEXAS
GUY N SEVERN
105809
LICENSED PROFESSIONAL ENGINEER
7/21/2026

CITY OF HOUSTON
HOUSTON PUBLIC WORKS

LIFT STATION RENEWAL & REPLACEMENT PROJECT
BRAESWOOD N LS

PUMP NO.3 CONTROL WIRING DIAGRAM

WBS NUMBER	FOR CITY OF HOUSTON USE ONLY
R-000267-0173-4	HOUSTON PUBLIC WORKS ACCEPTED AND FILED
DRAWING SCALE	82825 CITY DRAWING NUMBER
NTS	Approval Date 08/14/26 HOUSTON TX
CITY OF HOUSTON PM	
NUPUR KRISHNAN P.E. N.K.	
SHEET NO. 45 OF 274	

E1E19

PLOTTED: 8/11/2026 10:45 AM
PLOT STYLE: COH.ctb
FILE PATH: \\wusppplot01\d$\Global ProjectWise Plotting - WUS\Queue 2\queue2.dwg

	DESCRIPTION	SERVICE		ROUTING			WIRE SIZE & CONDUIT SIZE
		VOLTAGE	AMPS OR HP	FROM	TO	VIA	
100	SERVICE ENTRANCE	480VAC	200A	UTILITY POWER SERVICE	METER DISCONNECT	RIGID CONDUIT/DUCT BANK	4#2 / 1#2G, 2"C
100A	SERVICE POWER	480VAC	200A	MANUAL TRANSFER SWITCH	POWER BACK PANEL (POWER & CONTROL CABINET)	RIGID CONDUIT	4#2 / 1#2G, 2"C
100B	NORMAL/EMERGENCY POWER STATUS	24VDC	--	MANUAL TRANSFER SWITCH	CONTROL BACK PANEL (POWER & CONTROL CABINET)	RIGID CONDUIT	2#14, 3/4"C
100C	EMERGENCY POWER	480VAC	--	GENERATOR FUSED DISCONNECT SWITCH	PORTABLE GENERATOR	CAPPED CONDUITS	3"C (MINIMUN)
101	GROUND ELECTRODE CONDUCTOR	--	--	POWER AREA (POWER & CONTROL CABINET)	GROUND FIELD	--	1#6G
104	GROUND ELECTRODE CONDUCTOR	--	--	CONTROL AREA (POWER & CONTROL CABINET)	GROUND FIELD	--	1#6G
105	COMMUNICATION	--	--	COMMUNICATION POLE	PPU-AC PANEL	RIGID CONDUIT/DUCT BANK	ETHERNET CABLE, 1/2"C/ 2"C.
105A	COMMUNICATION POLE LIGHT	120V	--	POLE LIGHT SWITCH	LIGHTING PANEL (POWER & CONTROL CABINET)	RIGID CONDUIT	2#12 / 1#12G, 3/4"C.
200	PUMP NO. 1 POWER	480VAC	25 HP	PUMP NO. 1	PUMP NO. 1 JUNCTION BOX	RIGID CONDUIT/DUCT BANK	MFR CABLE, 2-1/2"C (SEE NOTE 2)
201	PUMP NO. 1 CONTROLS	120V	--	PUMP NO. 1	PUMP NO. 1 JUNCTION BOX	RIGID CONDUIT/DUCT BANK	INCL MFR CABLE, 2-1/2"C (SEE NOTE 2)
202	PUMP NO. 1 POWER	480VAC	25 HP	PUMP NO. 1 JUNCTION BOX	PUMP STARTER (POWER & CONTROL CABINET)	RIGID CONDUIT	3#10 / 1#10G, 1"C
203	COMBINED PUMP CONTROLS	120V	--	PUMP NO. 1 JUNCTION BOX	CONTROL PANEL (POWER & CONTROL CABINET)	RIGID CONDUIT	(COMBINE 201 & 301) 8#14, 1"C
300	PUMP NO. 2 POWER	480VAC	25 HP	PUMP NO. 2	PUMP NO. 2 JUNCTION BOX	RIGID CONDUIT/DUCT BANK	MFR CABLE, 2-1/2"C (SEE NOTE 2)
301	PUMP NO. 2 CONTROLS	120V	--	PUMP NO. 2	PUMP NO. 2 JUNCTION BOX	RIGID CONDUIT/DUCT BANK	INCL MFR CABLE, 2-1/2"C (SEE NOTE 2)
302	PUMP NO. 2 POWER	480VAC	25 HP	PUMP NO. 2 JUNCTION BOX	PUMP STARTER (POWER & CONTROL CABINET)	RIGID CONDUIT	3#10 / 1#10G, 1"C
400	PUMP NO. 3 POWER	480VAC	25 HP	PUMP NO. 3	PUMP NO. 3 JUNCTION BOX	RIGID CONDUIT/DUCT BANK	MFR CABLE, 2-1/2"C (SEE NOTE 2)
401	PUMP NO. 3 CONTROLS	120V	--	PUMP NO. 3	PUMP NO. 3 JUNCTION BOX	RIGID CONDUIT/DUCT BANK	INCL MFR CABLE, 2-1/2"C (SEE NOTE 2)
402	PUMP NO. 3 POWER	480VAC	25 HP	PUMP NO. 3 JUNCTION BOX	PUMP STARTER (POWER & CONTROL CABINET)	RIGID CONDUIT	3#10 / 1#10G, 1"C
403	PUMP NO. 3 CONTROLS	120V	--	PUMP NO. 3 JUNCTION BOX	CONTROL PANEL (POWER & CONTROL CABINET)	RIGID CONDUIT	4#14, 1"C
1000	LEVEL TRANSMITTER LT-1	24VDC	--	LEVEL TRANSMITTER LT-1	TRANSMITTER JUNCTION BOX	RIGID CONDUIT/DUCT BANK	INCL IN MFR CABLE, 2-1/2"C (SEE NOTE 2)
1001	LEVEL TRANSMITTER LT-2	24VDC	--	LEVEL TRANSMITTER LT-2	TRANSMITTER JUNCTION BOX	RIGID CONDUIT/DUCT BANK	INCL IN MFR CABLE, 2-1/2"C (SEE NOTE 2)
1002	COMBINED LEVEL TRANSMITTERS & FLOAT SWITCH	24VDC	--	TRANSMITTER JUNCTION BOX	POWER & CONTROL CABINET	RIGID CONDUIT	COMBINE 1000/1001/1003, 4#14+2#14G / 4#14, 2"C
1003	WELL FLOAT SWITCHES	24VDC	--	FLOAT SWITCH NO.1 & NO.2	TRANSMITTER JUNCTION BOX	RIGID CONDUIT/DUCT BANK	MFR CABLE, 2-1/2"C (SEE NOTE 2)
1100	120VAC FOR RECEPTACLE	120V	--	LIGHTING PANEL (POWER & CONTROL CABINET)	RECEPTACLE NEXT TO PUMP NO.3 J-BOX	RIGID CONDUIT	L5, 2#12 / 1#12G, 3/4"C
1101	COMMUNICATION POLE LIGHTING SWITCH	120V	--	LIGHTING PANEL (POWER & CONTROL CABINET)	POLE LIGHT SWITCH	RIGID CONDUIT	L8, 2#12 / 1#12G, 3/4"C
1102	ELECTRICAL PLATFORM LIGHT	120V	--	LIGHTING PANEL (POWER & CONTROL CABINET)	LIGHT SWITCH (ELECTRICAL PLATFORM LIGHT)	RIGID CONDUIT	L10, 2#12 / 1#12G, 1/2"C / 1-1/2"C

NOTES:

1. CONDUITS LABELED "FUTURE SPACE" ARE TO BE INSTALLED AND CAPPED IN FIELD.
2. ANY CONDUIT REQUIRING A CSBE SEAL, SHALL BE A MINIMUM SIZE OF 2 1/2".
3. ALL UNDERGROUND CONDUITS (SINGLE AND MULTI-RUN) SHALL BE MINIMUM 2 INCHES AND SHALL BE ENCASED IN REINFORCED CONCRETE DUCTBANK.

NO.	DATE	REVISION	APP.

HATCH
750 TOWN & COUNTRY BLVD
SUITE 650
HOUSTON, TX 77024
P: 832-930-7670
TX FIRM NUMBER: F-314

SURVEYED BY:
AMANI ENGINEERING, INC.
FB NO. P-6357

STATE OF TEXAS
GUY N SEVERN
105809
LICENSED
PROFESSIONAL ENGINEER
7/21/2026

CITY OF HOUSTON
HOUSTON PUBLIC WORKS

LIFT STATION RENEWAL & REPLACEMENT PROJECT
BRAESWOOD N LS

ELECTRICAL CONDUIT SCHEDULE

WBS NUMBER
R-000267-0173-4
DRAWING SCALE
NTS
CITY OF HOUSTON PM
NUPUR KRISHNAN P.E. N.K.

FOR CITY OF HOUSTON USE ONLY

HOUSTON PUBLIC WORKS
ACCEPTED AND FILED
82825
CITY DRAWING NUMBER
Approval Date 08/14/26
HOUSTON TX

E1E20

PLOTTED: 8/11/2026 10:41 AM
PLOT STYLE: COH.ctb
FILE PATH: \\wusppplot01\d$\Global ProjectWise Plotting - WUS\Queue 4\queue4.dwg

CP No.	Grid Northing	Grid Easting	Elevation	Description
1	13,778,040.80	3,089,895.93	65.60	5/8" Iron Rod w/Cap
10	13,778,055.26	3,089,841.49	64.89	X - Cut

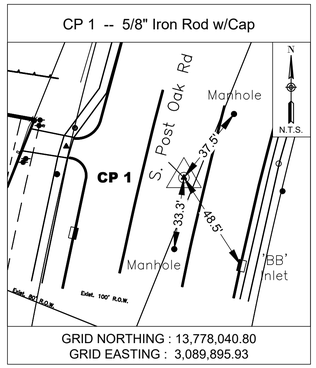

GRID NORTHING : 13,778,040.80
GRID EASTING : 3,089,895.93

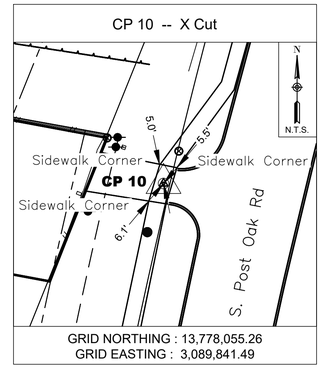

GRID NORTHING : 13,778,055.26
GRID EASTING : 3,089,841.49

CITY OF HOUSTON

CITY SURVEY 5051-8101
SITE CONTROL MONUMENT

S. POST OAK ROAD (NB)

PARKRIDGE DRIVE

Project WBS# R-000267-0175-3
Texas Coordinate System of 1983, South Central Zone, U. S. Survey Feet
X= 3,089,934.44
Y= 13,776,747.75
Lat.= N 29° 35' 1.8488"
Lon.= W 95° 28' 15.6912"

Keymap Page: 611B
Orthometric Elevation = 66.86
Ellipsoid Height= -22.40
Geoid: GEOID 18
Datum Source & Adjustment: 2-HR STATIC GPS OBSERVATION MADE ON MONUMENT ON 11/12/2024

Reference Frame Used: NAD_83(2011)(EPOCH: 2010.0000)
Vertical Adjustment used: NAVD 88 GEOID18
General Location: THE NORTHEAST CORNER OF S. POST OAK RD AND PARKRIDGE DR INTERSECTION.

Date Set: JUNE 13, 2011 Type of Mark: BRASS DISK

3 Nearest project control points (bearings and distances stated below):
1. CP #2, 5/8" IRON ROD CAPPED "AMANI", N 6° 04' 08" W, 872.50'
2. CP #1, 5/8" IRON ROD CAPPED "AMANI" , N 1° 42' 20" W, 1293.78'

NOTE:
1. Bearings are grid bearings.
2. Combined Factor (C.F)= 0.99987372.

Surface= Grid / C.F.

Surveyed By: Amani Engineering, Inc.
11011 Richmond Avenue, Suite 700
Houston, TX 77042
Tel. (713)270-5700
Texas Registered Survey Firm 10028200

STATE OF TEXAS REGISTERED CHRISTINA I. WEAVER 6753 PROFESSIONAL LAND SURVEYOR
4.4.25

P:\Cadd\2024\24013 - Hatch - COH FY20 Lift Stations\Monument\Post Oak #2 LS\5051-8101.dwg

22 X 34 : 1" = 20'
11 X 17 : 1" = 40'

NO.	DATE	REVISION	APP.

SURVEY NOTES:

1. ALL BEARINGS AND COORDINATES ARE BASED ON THE TEXAS COORDINATE SYSTEM, SOUTH CENTRAL ZONE (4204) NORTH AMERICAN DATUM OF 1983 (2011 ADJ) 2010 EPOCH, U.S. SURVEY FEET. COORDINATES SHOWN HEREON ARE GRID VALUES AND ALL DISTANCES SHOWN ARE SURFACE VALUES. THE COMBINED SCALE FACTOR IS 0.99987372.
2. GRID COORDINATES/SCALE FACTOR = SURFACE COORDINATES.
3. FIELD DATA COLLECTED NOVEMBER 2024.
4. ALL ELEVATIONS SHOWN HEREON ARE REFERENCED TO THE NORTH AMERICAN VERTICAL DATUM OF 1988 (NAVD88) GEOID 99. ALL CONTROL NETWORK ELEVATIONS ARE TIED TO CITY SURVEY 5051-8101 SITE CONTROL MONUMENT USING DIFFERENTIAL LEVELING. OBSERVED ELEVATION = 66.86'.
5. THE CONVERSION FACTOR FROM PROJECT LEVELED G18 ELEVATION TO THE HCFCD CALLED G99 ELEVATION = - 0.04'.
6. ACCORDING TO FEMA'S FLOOD INSURANCE RATE MAP (FIRM) PANEL NO. 48157C0305M. DATED 01/29/2021, THE SUBJECT PROPERTY LIES WITHIN ZONE X, OUTSIDE OF AN AREA OF 0.2% ANNUAL CHANCE FLOOD. APPROXIMATE LIMITS (IF SHOWN) ARE BASED ON AVAILABLE SHAPE FILES PROVIDED BY FEMA. THIS FLOOD STATEMENT IS BASED ON ENGINEERING INFORMATION PROVIDED BY FEMA AND SHALL NOT CREATE LIABILITY ON THE PART OF THE SURVEYOR.

PROJECT BENCH MARK:

STATIC GPS OBSERVATION OF CITY OF HOUSTON MONUMENT 5558-8607 MADE ON 11/12/2024. A BRASS DISK LOCATED IN THE NORTHEAST CORNER OF S. POST OAK RD AND PARKRIDGE DR INTERSECTION. OBSERVED ELEVATION = 66.86' (NAVD 88 GEOID 18) CALLED ELEVATION = 66.82' (GEOID 99)

AMANI ENGINEERING, INC.
11011 RICHMOND AVENUE
SUITE 700
HOUSTON, TEXAS 77024
TEL: (713) 270-5700
TBPE REG. NO. F-4528
TBPELS REG. NO. 1028200

HATCH
750 TOWN & COUNTRY BLVD.
SUITE 650
HOUSTON, TEXAS 77024
P:832-930-7670
TX FIRM NUMBER: F-314

SURVEYED BY:
AMANI ENGINEERING,INC.
FB NO. P-6357

STATE OF TEXAS REGISTERED WILLIAM H. REIMER III 4044 PROFESSIONAL LAND SURVEYOR
06-05-2026

CITY OF HOUSTON
HOUSTON PUBLIC WORKS

LIFT STATION RENEWAL & REPLACEMENT PROJECT
POST OAK #2 LIFT STATION SURVEY CONTROL MAP

WBS NUMBER
R-000267-0173-4
DRAWING SCALE
1" = 20'
CITY OF HOUSTON PM
NUPUR KRISHNAN P.E.N.K.
SHEET NO. 47 OF 274

FOR CITY OF HOUSTON USE ONLY
HOUSTON PUBLIC WORKS
ACCEPTED AND FILED
82825
CITY DRAWING NUMBER
Approval Date 08/14/26
HOUSTON TX

C1C07

FILE PATH: P:\Cadd\2024\24013 - Hatch - COH FY20 Lift Stations\CAD_DWG\Survey Control Drawings\Control-Post Oak #2 LS.dwg

0 1 2 3 ORIGINAL SCALE IN INCHES FOR REDUCED PLANS

VICINITY MAP SCALE 1" = 300'

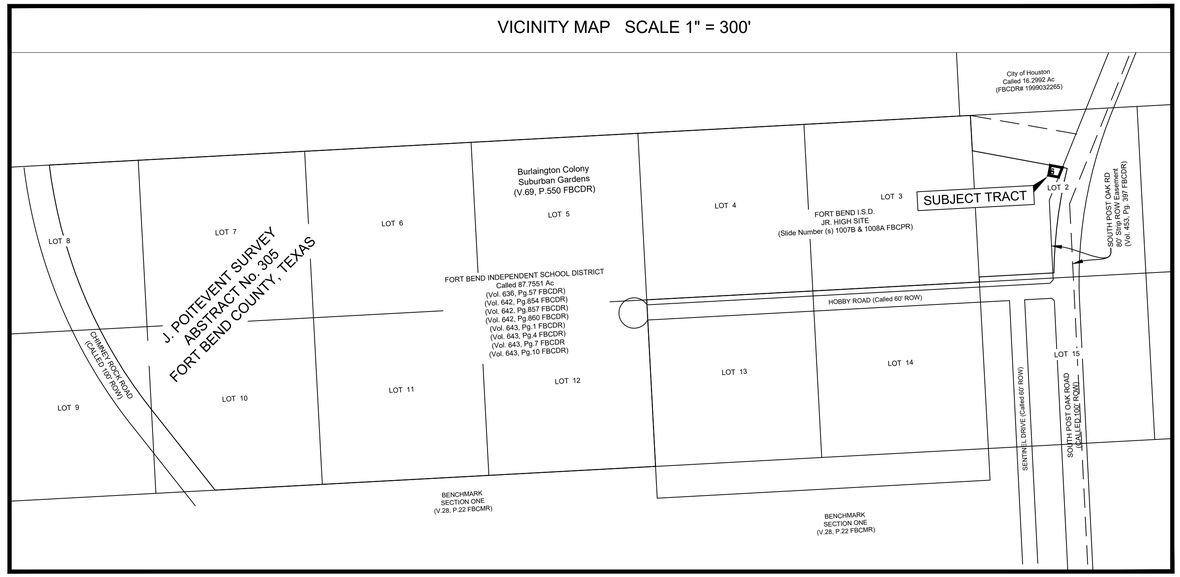

SYMBOL LEGEND	
●	FOUND IRON ROD
⊙	FOUND IRON PIPE
⊗	FOUND 'X' CUT
✖	To Be SET 'X' CUT
○	To Be SET 5/8" IRON ROD CAPPED 'AMANI'

LEGEND

ESMT	EASEMENT
CONC	CONCRETE
FBCCIN	FORT BEND COUNTY CLERK INSTRUMENT NUMBER
FBCDR	FORT BEND COUNTY DEED RECORDS
FBCPR	FORT BEND COUNTY PLAT RECORDS
NO	NUMBER
POB	POINT OF BEGINNING
POC	POINT OF COMMENCEMENT
PG	PAGE
ROW	RIGHT-OF-WAY
SEC	SECTION
VOL	VOLUME
WLE	WATER LINE EASEMENT
( )	CALLED DIMENSION

N

5 2.5 0 5

SCALE IN FEET

22 X 34 : 1" = 5'
11 X 17 : 1" = 10'

NO.	DATE	REVISION	APP.

NOTES:

1. ALL BEARINGS AND COORDINATES ARE BASED ON THE TEXAS COORDINATE SYSTEM, SOUTH CENTRAL ZONE (4204) NORTH AMERICAN DATUM OF 1983 (2011 ADJ) 2010 EPOCH. COORDINATES SHOWN HEREON ARE GRID VALUES AND ALL DISTANCES SHOWN ARE SURFACE VALUES.THE COMBINED SCALE FACTOR IS 0.99987372.
2. GRID COORDINATES/SCALE FACTOR = SURFACE COORDINATES.
3. HORIZONTAL COORDINATES BASED ON GPS FIELD DATA COLLECTED NOVEMBER 2024.
4. THIS SURVEY EXHIBIT IS ACCOMPANIED BY A LEGAL DESCRIPTION OF EVEN DATE.
5. THE SURVEYOR HAS NOT ABSTRACTED THE SUBJECT PROPERTY. ABSTRACT CERTIFICATES WERE PROVIDED BY ABSTRACT SERVICES OF HOUSTON, GF NO. 7910-25-1903 DATED MARCH 19, 2025.
   5. a) SANITARY SEWER LIFT STATION EASEMENT GRANTED TO POST OAK ROAD MUNICIPAL UTILITY DISTRICT, RECORDED IN VOLUME 843, PAGE 219 OF THE DEED RECORDS OF FORT BEND COUNTY, TEXAS
6. NO LAND TITLE COMMITMENT OR REPORT WAS PROVIDED BY THE CLIENT FOR THIS SURVEY. SURVEY WAS PREPARED WITHOUT BENEFIT OF A CURRENT TITLE COMMITMENT AND MAY NOT SHOW ALL ENCUMBRANCES ON SITE.

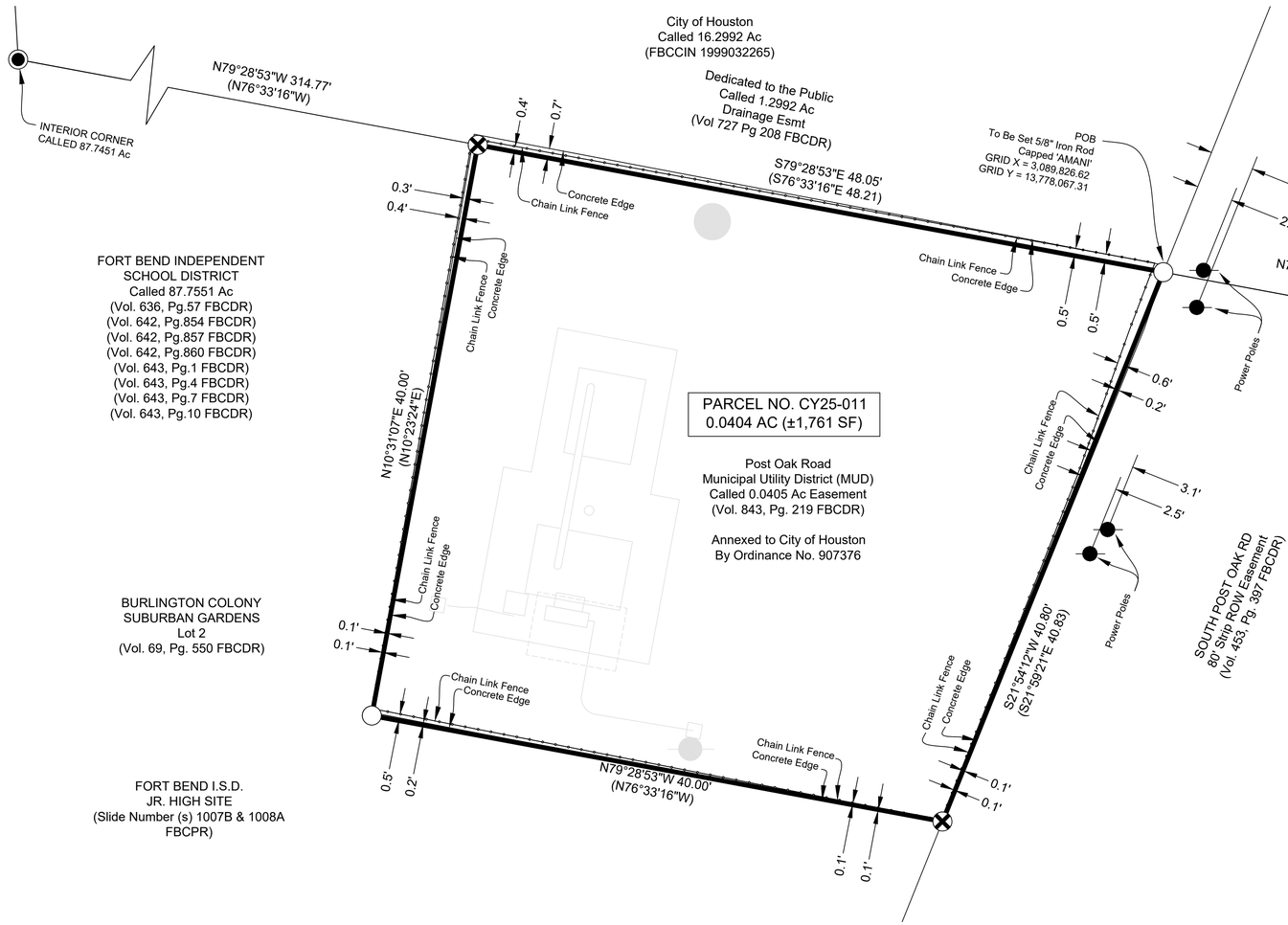

THIS SURVEY SUBSTANTIALLY COMPLIES WITH THE CURRENT TEXAS SOCIETY OF PROFESSIONAL SURVEYORS MANUAL OF PRACTICE REQUIREMENTS FOR A CATEGORY 1A, CONDITION 2 LAND TITLE SURVEY.

THE FIELD WORK WAS COMPLETED APRIL 01, 2025.

WILLIAM H. REIMER III
REGISTERED PROFESSIONAL LAND SURVEYOR NO. 4044
AMANI ENGINEERING, INC.
11011 RICHMOND AVE, SUITE 700
HOUSTON, TEXAS 77042
TEL 713.270.5700
TEXAS REGISTERED SURVEYING FIRM 10028200

STATE OF TEXAS · REGISTERED · WILLIAM H. REIMER III · 4044 · PROFESSIONAL · LAND SURVEYOR

William H. Reimer III 04-15-2025

AMANI ENGINEERING, INC.
11011 RICHMOND AVENUE, SUITE 700
HOUSTON, TEXAS 77042
TEL: (713) 270-5700
Texas Registered Engineering Firm No. F-4528
Texas Registered Surveying Firm No.100282-00

LAND TITLE SURVEY OF CALLED 0.0405 ACRE EASEMENT
VOLUME 843, PAGE 219 FBCDR, SITUATED IN THE
J. POITEVENT SURVEY, A-305, FORT BEND COUNTY, TEXAS.

HOUSTON PUBLIC WORKS

APPROVAL

DATE

SURVEY SECTION

RIGHT OF WAY SECTION

KEY MAP No. 611B	FACET MAP No. 5150d
PARCEL NO. CY25-011	
1" = 5'	
SHEET NO. 3 OF 3	
JOB NO.	
WBS NO. R-000267-0173-4	
ILMS NO.	

HOUSTON PUBLIC WORKS
ACCEPTED AND FILED
82825
CITY DRAWING NUMBER
Approval Date 08/14/26
HOUSTON TX

FILE PATH: P:\Cadd\2024\24013 - Hatch - COH FY20 Lift Stations\CAD_DWG\Boundary\Post Oak #2 LS\Post Oak #2 LS Parcel Boundary.dwg

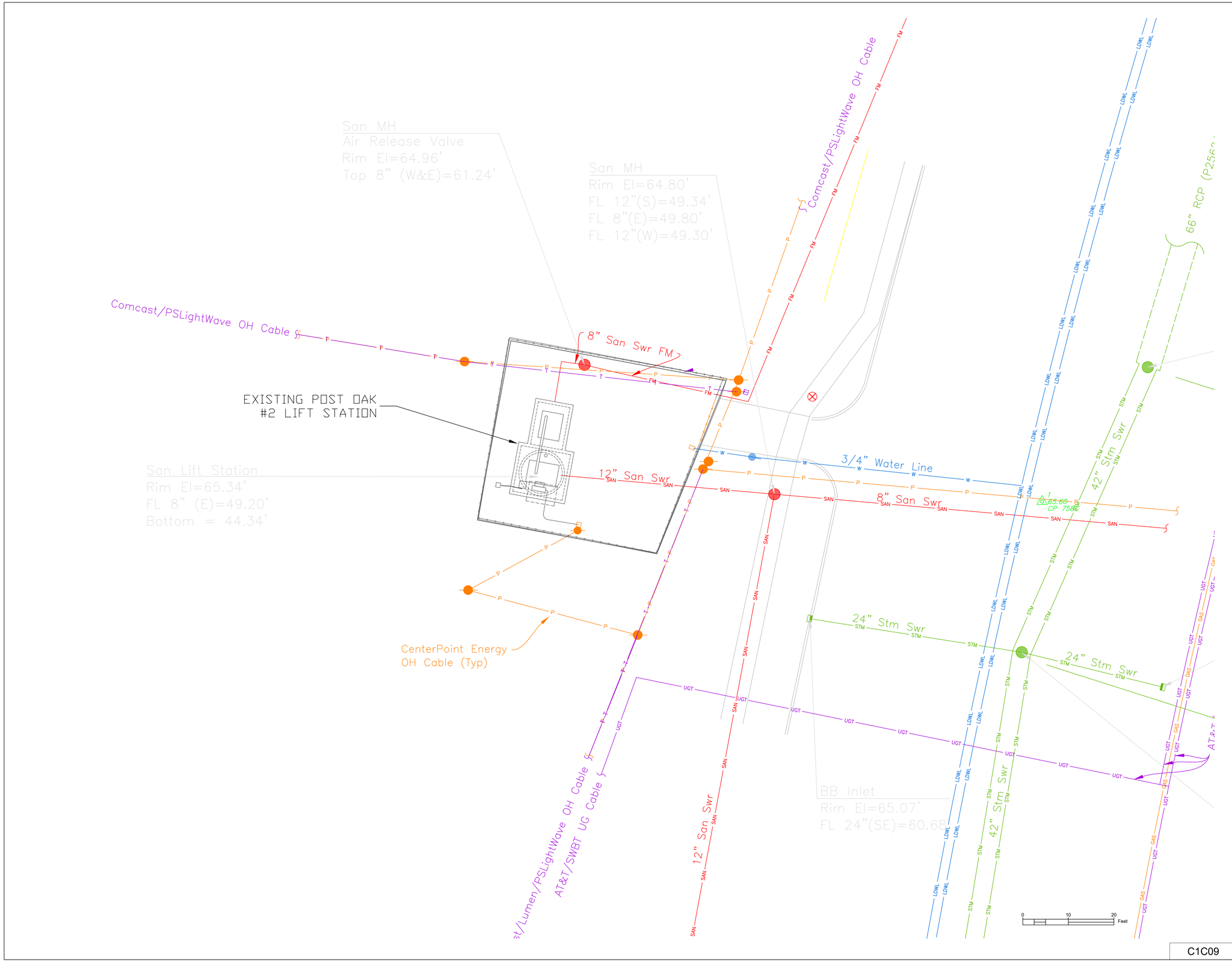

N

NOTE:

1. LS SITE IS NOT LOCATED IN THE 100 OR 500 YEAR FLOODPLAINS

NO.	DATE	REVISION	APP.

HATCH
750 TOWN & COUNTRY BLVD
SUITE 650
HOUSTON, TX 77024
P: 832-930-7670
TX FIRM NUMBER: F-314

SURVEYED BY:
AMANI ENGINEERING, INC.
FB NO. P-6357

STATE OF TEXAS
MARK G. SCALLY
136279
LICENSED
PROFESSIONAL ENGINEER
2/9/26

CITY OF HOUSTON
HOUSTON PUBLIC WORKS

LIFT STATION RENEWAL & REPLACEMENT PROJECT
POST OAK #2 LS
EXISTING CIVIL TOPOGRAPHIC PLAN

WBS NUMBER	FOR CITY OF HOUSTON USE ONLY
R-000267-0173-4	HOUSTON PUBLIC WORKS ACCEPTED AND FILED 82825 CITY DRAWING NUMBER Approval Date 08/14/26 HOUSTON TX
DRAWING SCALE	
AS NOTED	
CITY OF HOUSTON PM	
NUPUR KRISHNAN P.E. N.K.	
SHEET NO. 49 OF 274	

C1C09

PLOTTED: 5/14/2026 7:20 AM
PLOT STYLE: ----
FILE PATH: \\wusppplot01\d$\Global ProjectWise Plotting - WUS\Queue 3\queue3.dwg

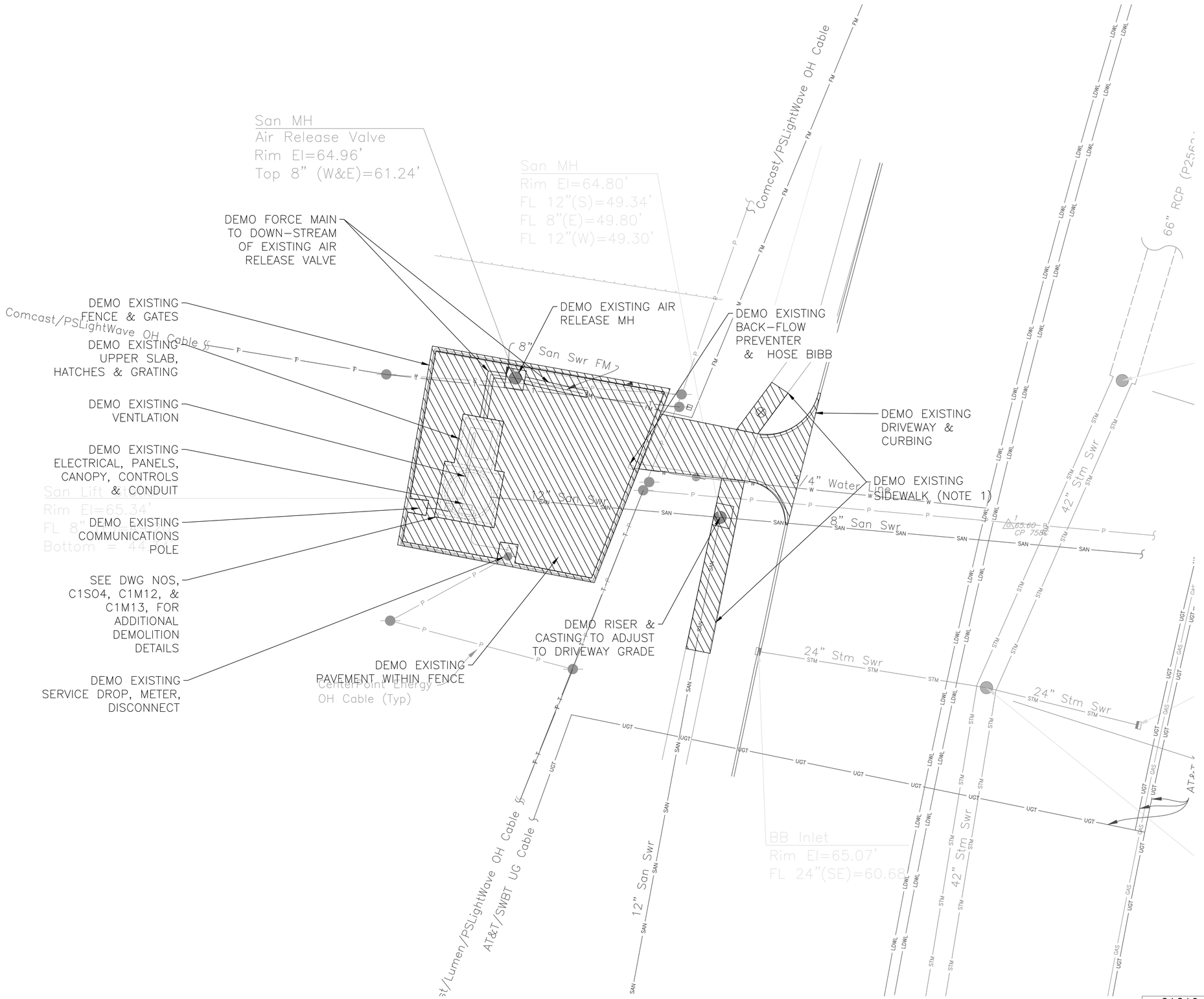

NOTE:

1. DEMO EXISTING SIDEWALK TO THE FIRST EXPANSION JOINTS TO THE NORTH AND SOUTH OF THE EXISTING FENCE ALIGNMENT. LIMITS SHOWN ON DRAWING ARE APROXIMATE.
2. THE CITY SHALL HAVE THE FIRST RIGHT OF REFUSAL TO RETAIN OR SALVAGE ALL ITEMS SHOWN TO BE DEMOLISHED AND/OR REMOVED, INCLUDING BUT NOT LIMITED TO PUMPS, HATCHES AND ELECTRICAL AND INSTRUMENTATION COMPONENTS. PRIOR TO INITIATING DEMOLITION WORK, THE CONTRACTOR AND THE DESIGNATED FIELD INSPECTOR SHALL MAKE A JOINT INSPECTION OF EACH SITE TO IDENTIFY ALL EQUIPMENT TO BE RETAINED BY THE CITY FOR SALVAGE OR REUSE. ITEMS IDENTIFIED FOR SALVAGE REPRESENTATIVE (CAPITAL PROJECTS CONSTRUCTION INSPECTOR) FOR WASTEWATER TREATMENT PLANT SALVAGE AT LEAST 72 HOURS PRIOR TO DEMOLITION IN ORDER TO COORDINATE REMOVAL OF ANY ITEMS THE CITY WISHES TO CLAIM AND SALVAGE. THE CONTRACTOR SHALL DELIVER ALL SALVAGE ITEMS TO A LOCATION WITHIN THE CITY DETERMINED BY THE CITY.

NO.	DATE	REVISION	APP.

NOTICE:
FOR YOUR SAFETY, YOU ARE REQUIRED BY TEXAS LAW TO CALL 811 AT LEAST 48 HOURS BEFORE YOU DIG SO THAT UNDERGROUND LINES CAN BE MARKED. THIS SIGNATURE DOES NOT FULFILL YOUR OBLIGATION TO CALL 811

VERIFICATION OF PRIVATE UTILITY LINES

Mike Brower — 07/31/26 (Date)

CenterPoint Energy natural gas utilities shown. (Gas service lines are not shown). This signature not be used for conflict verification.
Signature valid for six months.

Mike Brower — 07/31/26 (Date)

CenterPoint Energy/UNDERGROUND Electrical Facilities Verification ONLY. (This signature verifies existing underground facilities – not to be used for conflict verification)
Signature valid for six months.

Marc F Johnson — 7/28/26 (Date)

Approved for AT&T underground conduit facilities only.
Signature valid for one year.

HATCH
750 TOWN & COUNTRY BLVD
SUITE 650
HOUSTON, TX 77024
P: 832-930-7670
TX FIRM NUMBER: F-314

SURVEYED BY:
AMANI ENGINEERING, INC.
FB NO. P-6357

STATE OF TEXAS
MARK G. SCALLY
136279
LICENSED PROFESSIONAL ENGINEER
9/1/26

CITY OF HOUSTON
HOUSTON PUBLIC WORKS

LIFT STATION RENEWAL & REPLACEMENT PROJECT
POST OAK #2 LS
CIVIL DEMOLITION PLAN

WBS NUMBER
R-000267-0173-4
DRAWING SCALE
AS NOTED
CITY OF HOUSTON PM
NUPUR KRISHNAN P.E. N.K.
SHEET NO. 50 OF 274

FOR CITY OF HOUSTON USE ONLY

HOUSTON PUBLIC WORKS
ACCEPTED AND FILED
82825
CITY DRAWING NUMBER
Approval Date 08/14/26
HOUSTON TX

C1C10

PLOTTED: 2/5/2026 11:34 AM
PLOT STYLE: Grayscale.ctb
FILE PATH: C:\pwworking\hatch-dpd-south_central_us\dms51138\H374729-0000-220-251-0004.dwg

PLOTTED: 8/11/2026 4:22 PM
FILE PATH: Y:\2022071 LIFT STATIONS RENEWAL AND REPLACEMENT (HATCH) WBS NO. R-000267-0173-3\Auto CAD\Site Plan 90%\Post Oak Topo - Site Plan\H374729-0000-220-251-0005.dwg

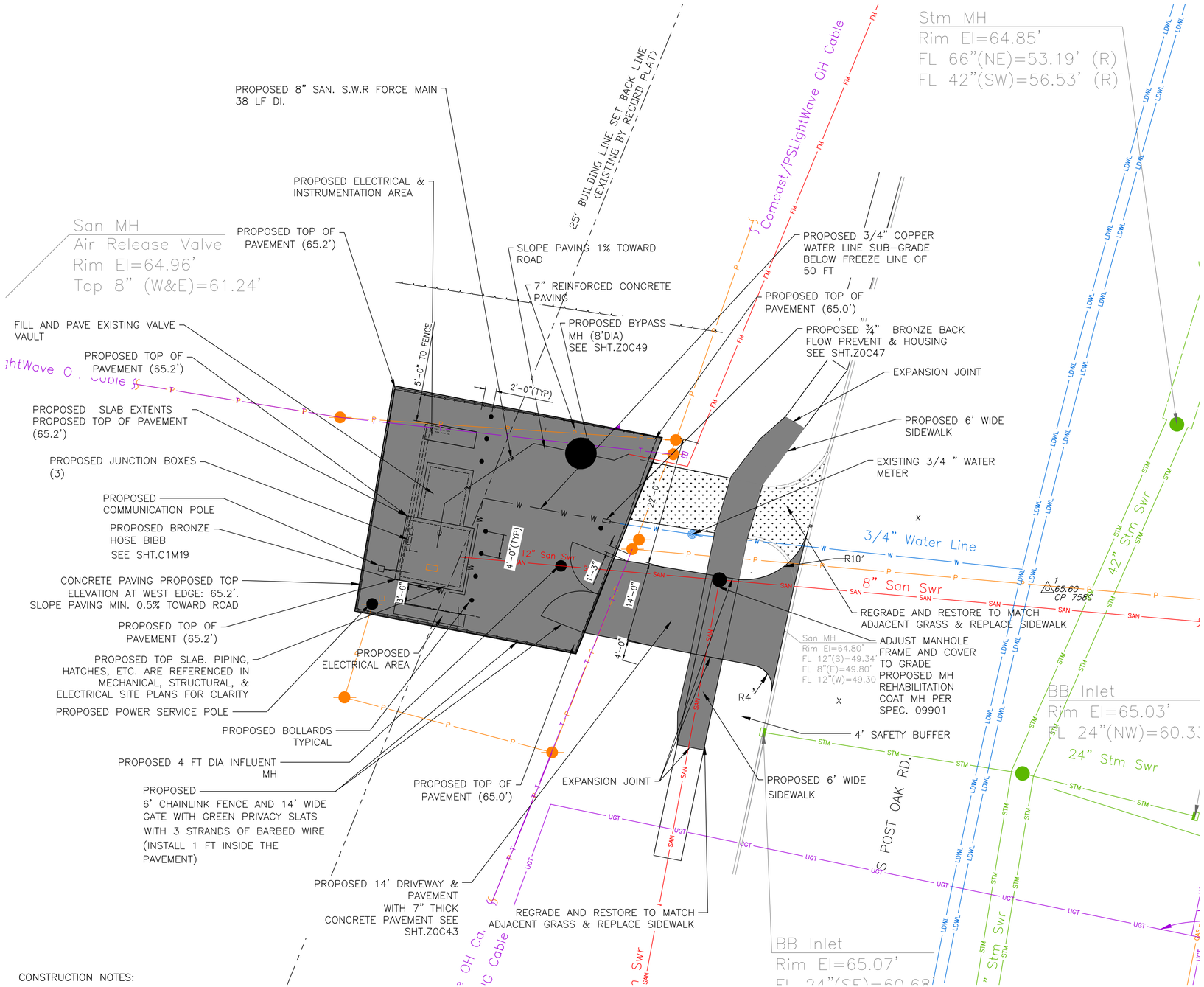

CONSTRUCTION NOTES:

1. CONTRACTOR SHALL BE FULLY RESPONSIBLE FOR ANY DAMAGES TO EXISTING WATER, WASTEWATER, STORMWATER LINES AND TRAFFIC CONTROL DEVICES. ALL DAMAGES SHALL BE IN ACCORDANCE WITH THE "STANDARD CONSTRUCTION SPECIFICATION" REFERENCED AT NO COST TO THE CITY.

2. ADEQUATE DRAINAGE SHALL BE MAINTAINED AT ALL TIMES DURING CONSTRUCTION AND ANY DRAINAGE DITCH OR STRUCTURE DISTURBED DURING CONSTRUCTION SHALL BE RESTORED TO THE SATISFACTION OF THE OWNING AUTHORITY.

3. COAT WET WELL AND SAN MANHOLES IN ACCORDANCE WITH SPEC SECTION 09901

4. CONTRACTOR SHALL TAKE NECESSARY PRECAUTIONS TO PROTECT ROOT SYSTEMS OF SHRUBS, PLANTS, AND TREES ALONG THE AREA OF EXCAVATION.

5. CONTRACTOR SHALL COORDINATE WITH CENTERPOINT ENERGY TO DE-ENERGIZE THE LIFT STATION AND OTHER ELECTRICAL EQUIPMENT ON SITE.

6.SANITARY SEWER MANHOLES AND HATCHES INSTALLED BELOW THE FLOODPLAIN ELEVATION SHALL HAVE WATERTIGHT MANHOLE FRAMES AND COVERS OR HATCHES.

7. CONTRACTOR SHALL COMPLY WITH THE LATEST EDITION OF OSHA REGULATIONS AND THE STATE OF TEXAS LAWS CONCERNING EXCAVATION.

8. CONTRACTOR TO COORDINATE LAYDOWN AREA WITH OWNER.

9. CONTRACTOR TO PROVIDE CONSTRUCTION JOINTS ON PROPOSED PAVING AT INTERVALS NO MORE THAN 15' O/C

NOTES:

GENERAL

1. THIS IS A LIFT STATION REHABILITATION PROJECT (REPLACING PIPES, PUMPS, CONCRETE TOP SLAB AND HATCHES, AND ELECTRICAL FACILITIES) UNDER CONSENT DECREE FOR EARLY ACTION COMPLETION.
2. THIS PROPOSED SITE DEVELOPMENT PLAN PROVIDES A GENERAL OVERVIEW OF THE PROPOSED IMPROVEMENTS WITHIN THE SITE. PLEASE REFER TO PROPOSED SITE PLANS FOR ELECTRICAL, MECHANICAL, AND STRUCTURAL INFORMATION CONTAINED IN THIS DRAWING SET FOR MORE DETAILED INFORMATION.

PLANNING

1. THERE IS A BUILDING SETBACK LINE 25' FROM THE PROPERTY LINE. NO BUILDING STRUCTURES ARE PROPOSED WITHIN THE BUILDING SETBACK LINE.

PLATTING

1. THIS LIFT STATION SITE IS PART OF AND OUT OF THE UNRESTRICTED LOT 2, BURLINGTON COLONY SUBURBAN GARDENS SUBDIVISION, FILED FOR RECORD AT VOL.69, PG.550, FBCMR AND SUDSEQUENT REPLAT OF FORT BEND I.S.D. JR. HIGH SITE, FILED FOR RECORD AT SLIDE NUMBER 1007B AND 1008A, FBCMR.

FLOODPLAIN

1. LS SITE IS NOT WITHIN THE 100-YEAR OR 500-YEAR FLOODPLAIN.

STORMWATER

1. DETENTION IS NOT REQUIRED FOR THE WORK PROPOSED BASED ON OFFICE OF CITY ENGINEER MEMO.
2. LIFT STATION TRACT AREA =3,100 SF. EXISTING IMPERVIOUS = 75.85%. INCREASE IN IMPERVIOUS = 431 SF (EXPANSION OF EXISTING DRIVEWAY).
3. THE PROPOSED WORK WILL NOT CHANGE OR ADD ANY SHEET FLOW TO ADJACENT PROPERTIES.
4. DETENTION NOT REQUIRED FOR THE IMPERVIOUS AREA RESULTING FROM THE PROPOSED SITE DISTURBANCE FOR THE LIFT STATION REHAB. SHEET FLOW IS A REASONABLE METHOD FOR STORMWATER DRAINAGE AT THIS SITE.
   a. Drainage Analysis:
   Additional impervious = 90 SF.
   A= 431 SF = 0.00989 AC
   C= 0.95
   tc = 5 min
   IDF Parameters (2-YEAR) b = 48.35, d=9.07, e = 0.7244
   Rain Fall Intensity = i = 7.09 in/hr
   Q = C x A x i= 0.0701 CFS
   The existing 24" RCP Storm Sewer has adequate capacity to accept the nominal additional flow.
   b) Protection of Adjacent Lots:
   Grading elevations do not change from existing.

ELECTRICAL

1. ALL ELECTRICAL FACILITIES ARE DESIGNED TO BE INSTALLED AT ABOVE 3' ABOVE THE 500-YEAR FLOOD ELEVATION. INSTALLATION OF ANY ELECTRICAL WIRING OR EQUIPMENT BELOW 3' ABOVE THE 500-YEAR FLOOD ELEVATION MUST CONFIRM TO PROVISIONS OF THE 2023 NATIONAL ELECTRICAL CODE.

LANDSCAPING

1. NOT APPLICABLE FOR REHABILITATION OF WASTEWATER LIFT STATION.

OFF STREET PARKING

1. NOT APPLICABLE FOR REHABILITATION OF WASTEWATER LIFT STATION.

LEGEND :

- PROPOSED FENCE LINE
- PROPOSED CONCRETE PAVING EXTENTS
- PROPOSED BOLLARDS (2' FROM NEAREST STRUCTURE 4' FROM EACH OTHER)(TYP)

N

0 10 20 Feet

NO.	DATE	REVISION	APP.

NOTICE:
FOR YOUR SAFETY, YOU ARE REQUIRED BY TEXAS LAW TO CALL 811 AT LEAST 48 HOURS BEFORE YOU DIG SO THAT UNDERGROUND LINES CAN BE MARKED. THIS SIGNATURE DOES NOT FULFILL YOUR OBLIGATION TO CALL 811

VERIFICATION OF PRIVATE UTILITY LINES

Mike Brower 07/31/26
Date

CenterPoint Energy natural gas utilities shown. (Gas service lines are not shown). This signature not be used for conflict verification.
Signature valid for six months.

Mike Brower 07/31/26
Date

CenterPoint Energy/UNDERGROUND Electrical Facilities Verification ONLY. (This signature verifies existing underground facilities – not to be used for conflict verification)
Signature valid for six months.

Marc F Johnson 7/28/26
Date

Approved for AT&T underground conduit facilities only.
Signature valid for one year.

FCM Engineers, PC
3300 S. Gessner Rd.
Suite 249
Houston, Texas 77063
T- 713-706-4412
F- 713-706-4410

HATCH
750 TOWN & COUNTRY BLVD
SUITE 650
HOUSTON, TX 77024
P: 832-930-7670
TX FIRM NUMBER: F-314

SURVEYED BY:
AMANI ENGINEERING, INC
FB NO. P-P-6357

STATE OF TEXAS
FRANK C. MBACHU
108363
LICENSED
PROFESSIONAL ENGINEER
31 JUL 2026

CITY OF HOUSTON
HOUSTON PUBLIC WORKS

LIFT STATION RENEWAL & REPLACEMENT PROJECT
POST OAK #2 LIFT STATION PROPOSED CIVIL SITE DEVELOPMENT PLAN

WBS NUMBER	R-000267-0173-4
DRAWING SCALE	AS NOTED
CITY OF HOUSTON PM	NUPUR KRISHNAN P.E. N.K.
SHEET NO.	51 OF 274

FOR CITY OF HOUSTON USE ONLY

HOUSTON PUBLIC WORKS
ACCEPTED AND FILED
82825
CITY DRAWING NUMBER
Approval Date 08/14/26
HOUSTON TX

C1C11

NO.	DATE	REVISION	APP.

SHEET NOT USED

HATCH
750 TOWN & COUNTRY BLVD
SUITE 650
HOUSTON, TX 77024
P: 832-930-7670
TX FIRM NUMBER: F-314

STATE OF TEXAS
MARK G. SCALLY
136279
LICENSED PROFESSIONAL ENGINEER
5/1/26

CITY OF HOUSTON
HOUSTON PUBLIC WORKS

LIFT STATION RENEWAL & REPLACEMENT PROJECT

WBS NUMBER
R-000267-0173-4
DRAWING SCALE
AS NOTED
CITY OF HOUSTON PM
NUPUR KRISHNAN P.E. N.K.
SHEET NO. 52 OF 274

FOR CITY OF HOUSTON USE ONLY

HOUSTON PUBLIC WORKS
ACCEPTED AND FILED
82825
CITY DRAWING NUMBER
Approval Date 08/14/26
HOUSTON TX

C1C12

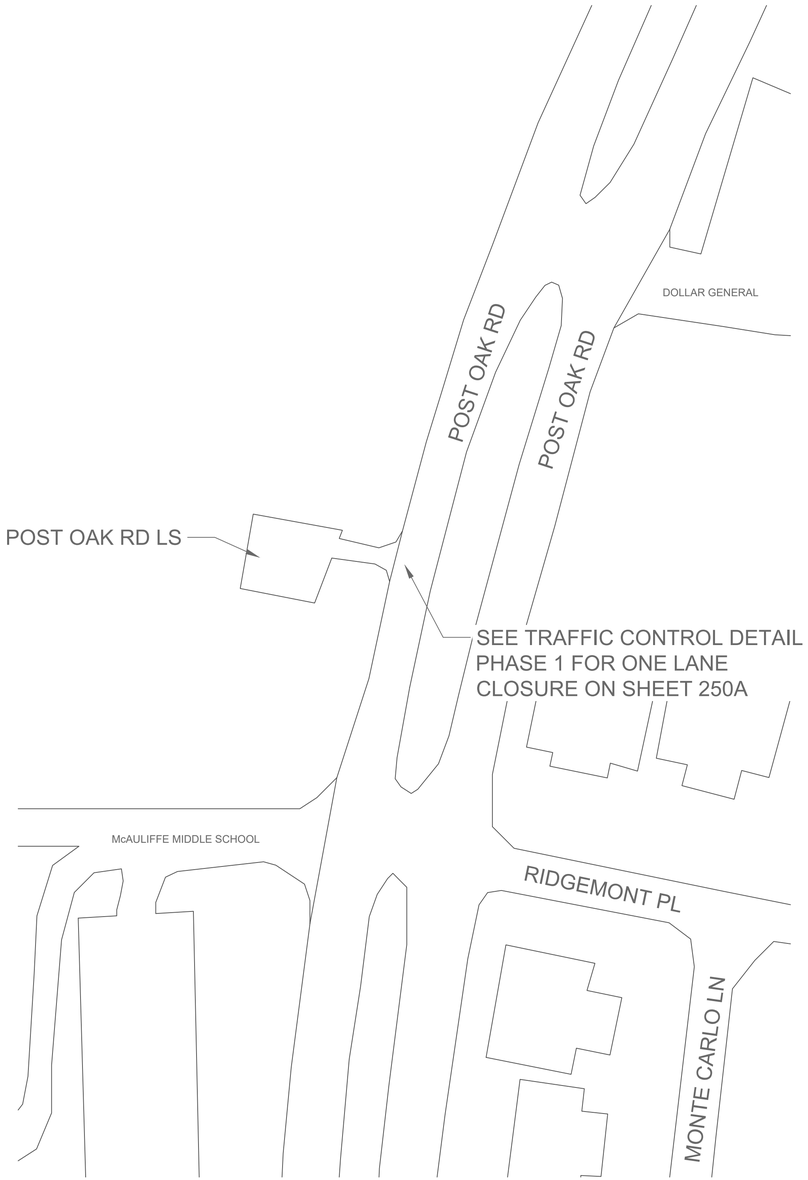

N

NO.	DATE	REVISION	APP.

0 40 80 Feet

HATCH
750 TOWN & COUNTRY BLVD
SUITE 650
HOUSTON, TX 77024
P: 832-930-7670
TX FIRM NUMBER: F-314

SURVEYED BY:

STATE OF TEXAS
MARK G. SCALLY
136279
LICENSED PROFESSIONAL ENGINEER
8/13/26

CITY OF HOUSTON
HOUSTON PUBLIC WORKS

LIFT STATION RENEWAL & REPLACEMENT PROJECT
POST OAK RD. LS
TRAFFIC CONTROL PLAN

WBS NUMBER
R-000267-0173-4
DRAWING SCALE
AS NOTED
CITY OF HOUSTON PM
NUPUR KRISHNAN, P.E. N.K.
SHEET NO. 53 OF 274

FOR CITY OF HOUSTON USE ONLY

HOUSTON PUBLIC WORKS
ACCEPTED AND FILED
82825
CITY DRAWING NUMBER
Approval Date 08/14/26
HOUSTON TX

C1C13

PLOT STYLE: Grayscale.ctb PLOTTED: 2/2/2026 9:28 AM

FILE PATH: C:\pwworking\hatch-dpd-south_central_us\dms51143\H374729-0500-220-271-0001.dwg

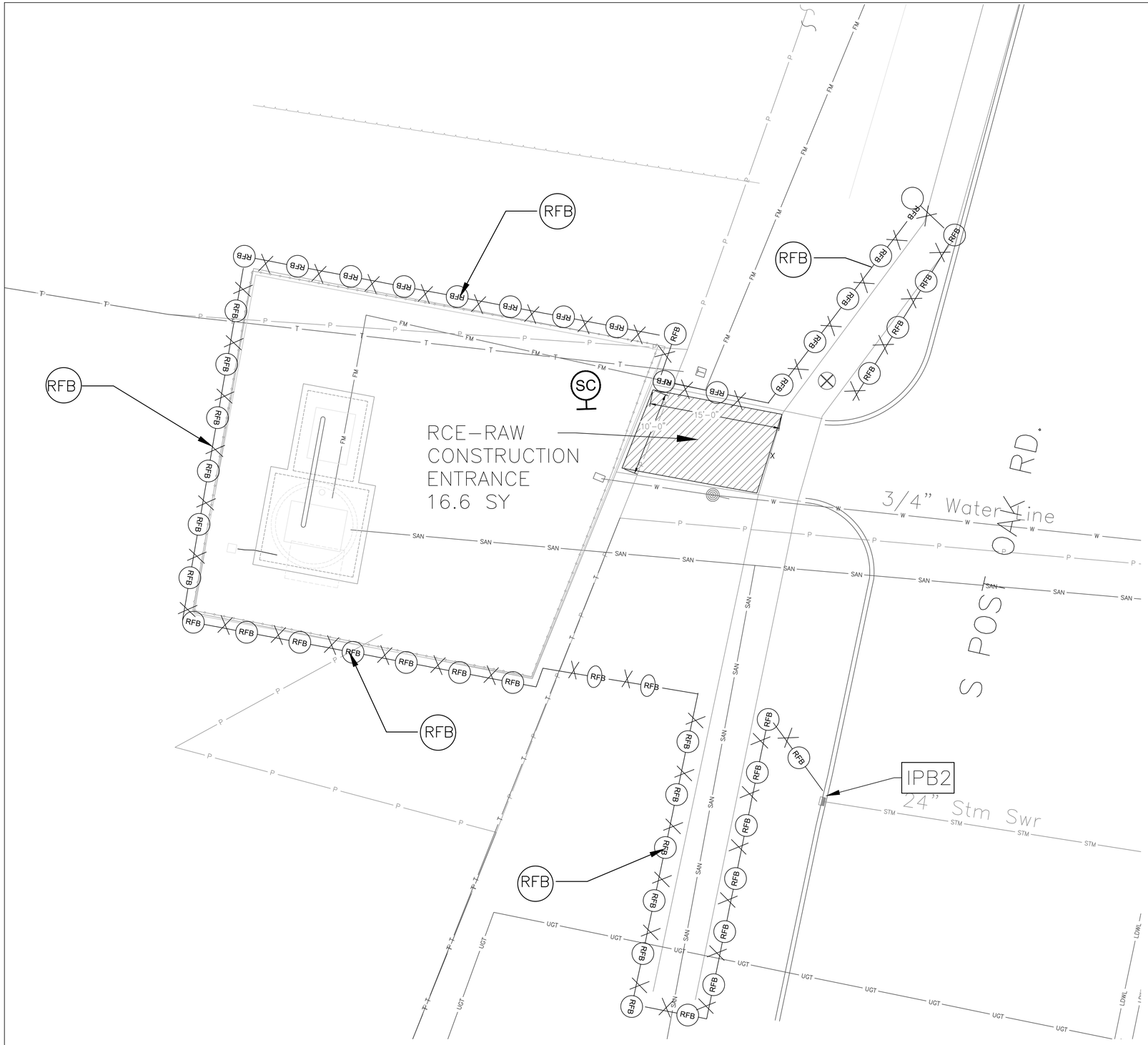

N

0 10 20 Feet

NO.	DATE	REVISION	APP.

LEGEND :

- RFB — REINFORCED FILTER FABRIC BARRIER.
- IPB2 — INLET PROTECTION BARRIER.
- SC — STABILIZED CONSTRUCTION ACCESS

NOTES:

1. STORM WATER POLLUTION PLAN CONFORM TO SPECIFICATIONS AND DRAWINGS.
2. ALL DISTURBED AREAS THAT ARE NOT PAVED OR COVERED BY STRUCTURE SHALL BE SODDED OR HYDROMULCH SEEDED.
3. CONTRACTOR'S LAY DOWN/STORAGE AREA SHALL HAVE A STABILIZED CONSTRUCTION EXIT.
4. SEE SHEET Z0G06 FOR STORM WATER POLLUTION PREVENTION PLAN NOTES AND DETAILS.
5. CONTRACTOR SHALL PROVIDE A STABILIZED CONSTRUCTION EXIT, INCLUDING TRUCK WASHING AREA, VERIFIED IN THE FIELD AND AUTHORIZED BY ENGINEER.

FCM Engineers, PC
3300 S. Gessner Rd.
Suite 249
T- 713-706-4412
F- 713-706-4410
Tx Firm No. 13481

HATCH
750 TOWN & COUNTRY BLVD
SUITE 650
HOUSTON, TX 77024
P: 832-930-7670
TX FIRM NUMBER: F-314

SURVEYED BY:
AMANI ENGINEERING, INC
FB NO. P-6357

STATE OF TEXAS
FRANK C. MBACHU
108363
LICENSED
PROFESSIONAL ENGINEER
3/23/2026

CITY OF HOUSTON
HOUSTON PUBLIC WORKS

LIFT STATION RENEWAL & REPLACEMENT PROJECT
POST OAK #2 LIFT STATION
SWPPP

WBS NUMBER
R-000267-0173-4
DRAWING SCALE
1"=10'
CITY OF HOUSTON PM
NUPUR KRISHNAN P.E. N.K.

FOR CITY OF HOUSTON USE ONLY

HOUSTON PUBLIC WORKS
ACCEPTED AND FILED
82825
CITY DRAWING NUMBER
Approval Date 08/14/26
HOUSTON TX

C1C14 SHEET NO. 54 OF 274

PLOTTED: 6/5/2026 10:42 AM
PLOT STYLE: Grayscale.ctb
FILE PATH: Y:\2022071 LIFT STATIONS RENEWAL AND REPLACEMENT (HATCH) WBS NO. R-000267-0173-3\Auto CAD\New SWPPP\Post Oak Topo\BASE-Postoak#2LS.dwg

PLOT STYLE: Monochrome.ctb PLOTTED: 7/27/2026 5:24 AM

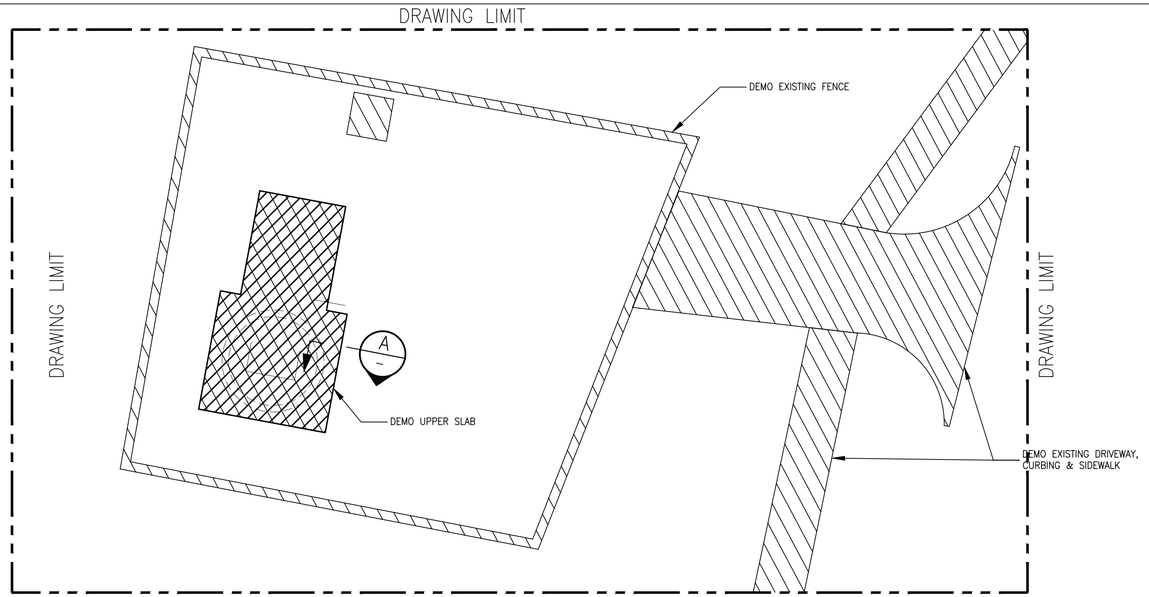

DEMO PLAN
SCALE: 1"=10'

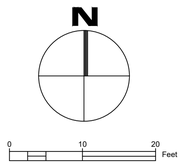

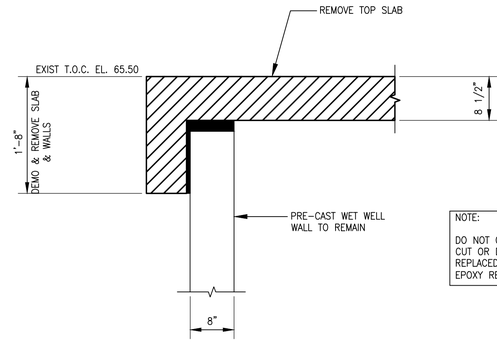

NOTE:

DO NOT CUT VERT. REBAR DURING WALL DEMO CUT OR DAMAGED EXIST VERT REBAR SHALL BE REPLACED WITH SAME SIZE REBAR, DRILL AND EPOXY REBAR 12" INTO EXIST WALL.

A: TYPICAL DEMO SECTION
SCALE: N.T.S

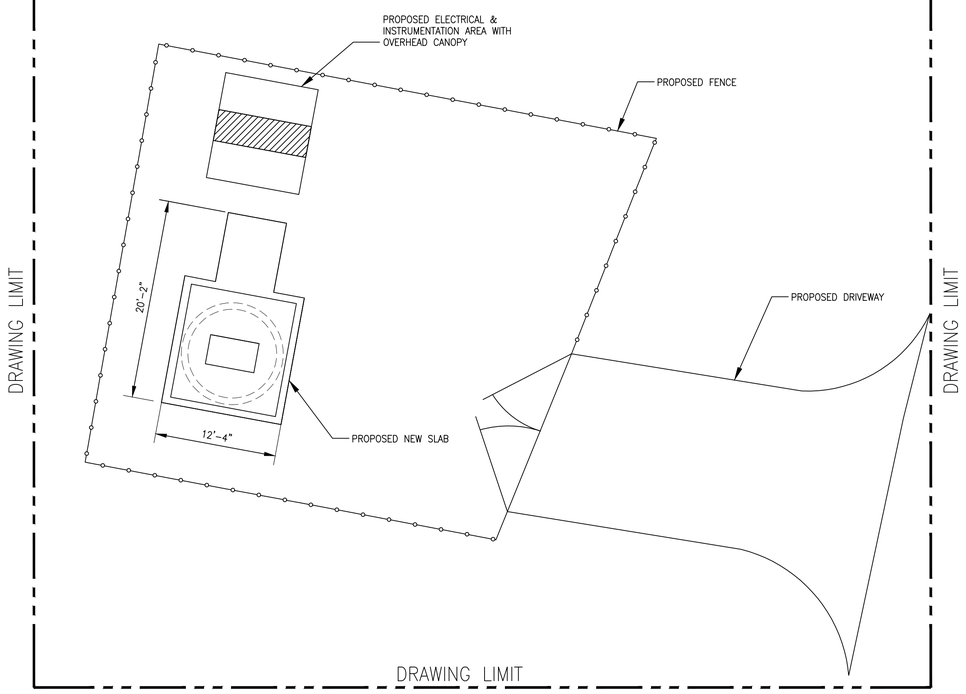

NEW PLAN LAYOUT
SCALE: 1"=10'

NOTE:

THE CITY SHALL HAVE THE FIRST RIGHT OF REFUSAL TO RETAIN OR SALVAGE ALL ITEMS SHOWN TO BE DEMOLISHED AND/OR REMOVED, INCLUDING BUT NOT LIMITED TO PUMPS, HATCHES, AND ELECTRICAL AND INSTRUMENTATION COMPONENTS. PRIOR TO INITIATING DEMO WORK, THE CONTRACTOR AND THE DESIGNATED FIELD INSPECTOR SHALL MAKE A JOINT INSPECTION OF EACH TO IDENTIFY ALL EQUIPMENT TO BE RETAINED BY THE CITY FOR SALVAGE AND REUSE. ITEMS IDENTIFIED FOR SALVAGE SHALL BE CAREFULLY REMOVED TO PROTECT FROM DAMAGE. ALL OTHER ITEMS SHOWN TO BE DEMOLISHED / REMOVED THAT ARE NOT RETAINED BY THE CITY SHALL BE PROPERLY REMOVED FROM THE SITE AND HANDLED PER SPECIFICATIONS AT NO ADDITIONAL COST TO THE CITY. CONTACT CITY DESIGNATED CITY REPRESENTATIVE FOR WASTEWATER TREATMENT PLANT SALVAGE AT LEAST 72 HOURS PRIOR TO DEMOLITION IN ORDER TO COORDINATE REMOVAL OF ANY ITEMS THE CITY WISHES TO CLAIM AND SALVAGE. THE CONTRACTOR SHALL DELIVER ALL SALVAGE ITEMS TO A LOCATION WITHIN THE CITY DETERMINED BY THE CITY.

NO.	DATE	REVISION	APP.

FCM Engineers, PC
3300 S. Gessner Rd.
Suite 249
T- 713-706-4412
F- 713-706-4410
Tx Firm No. 13481

HATCH
750 TOWN & COUNTRY BLVD
SUITE 650
HOUSTON, TX 77024
P: 832-930-7670
TX FIRM NUMBER: F-314

STATE OF TEXAS 73307 CHARLES C.A. MGBEIKE LICENSED PROFESSIONAL ENGINEER
05/19/26

SURVEYED BY:
AMANI ENGINEERING, INC
FB NO. P-6357

CITY OF HOUSTON
HOUSTON PUBLIC WORKS

LIFT STATION RENEWAL & REPLACEMENT PROJECT
POST OAK #2 LIFT STATION PROPOSED DEMOLITION & STRUCTURAL PLAN

WBS NUMBER	FOR CITY OF HOUSTON USE ONLY
R-000267-0173-4	HOUSTON PUBLIC WORKS ACCEPTED AND FILED 82825 CITY DRAWING NUMBER Approval Date 08/14/26 HOUSTON TX
DRAWING SCALE	
AS NOTED	
CITY OF HOUSTON PM	
NUPUR KRISHNAN P.E. N.K.	
C1S04	SHEET NO. 55 OF 274

FILE PATH: C:\Users\francis.iheagwara\Desktop\FOI\Lift Station\CAD\MBK\Post Oak\FINAL\Post Oak Demo & Const.dwg

PLOT STYLE: Monochrome.ctb PLOTTED: 8/10/2026 8:11 PM
FILE PATH: C:\Users\francis.iheagwara\Desktop\FOI\Lift Station\CAD\MBK\Post Oak\FINAL\Post Oak New Slab.dwg

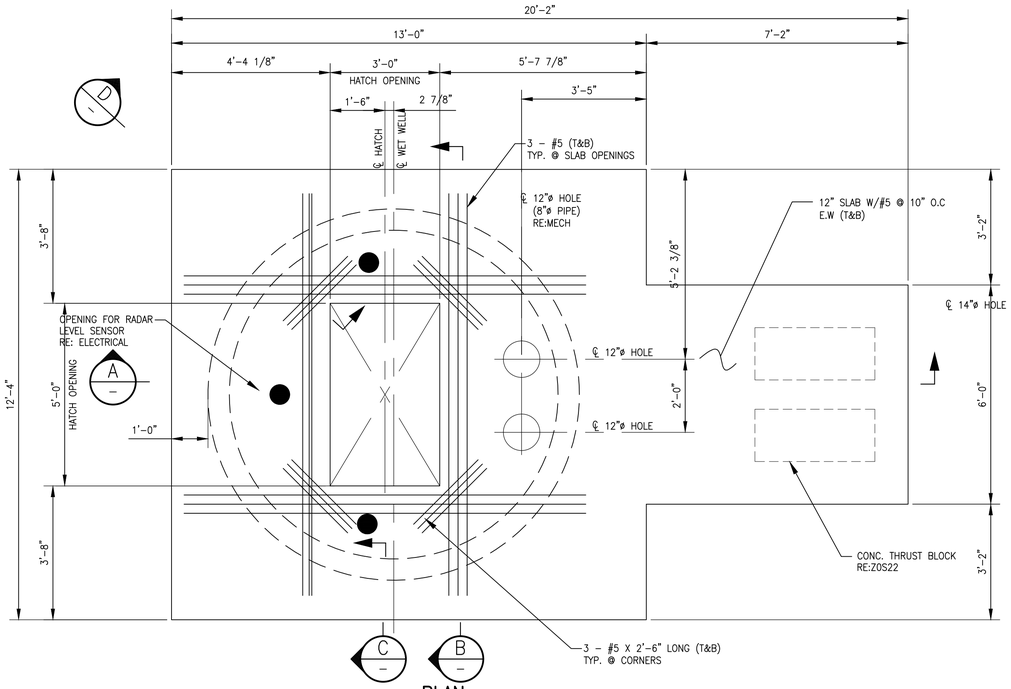

PLAN
LIFT STATION TOP SLAB
SCALE: 1/2" = 1'-0"

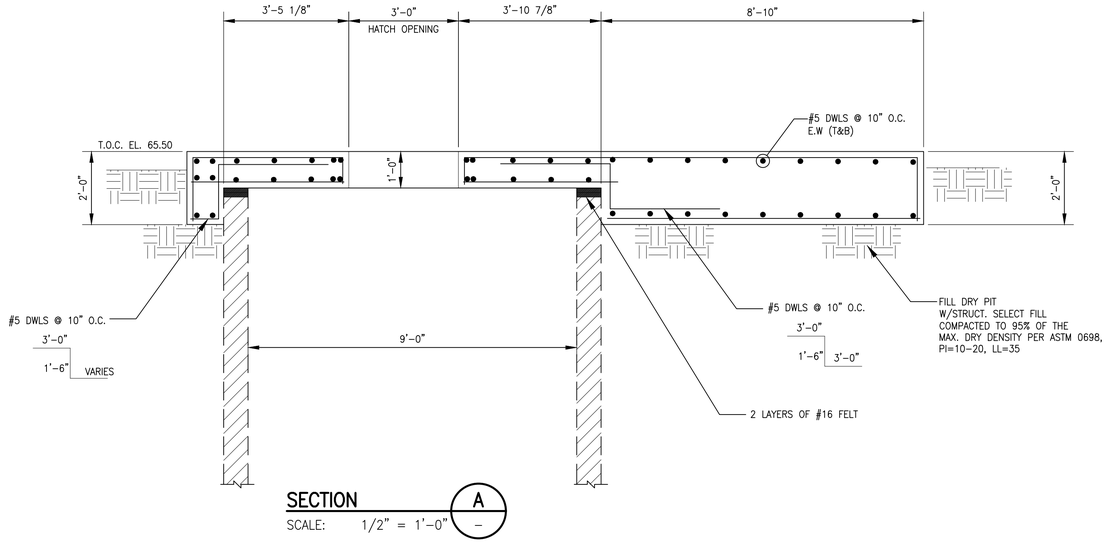

SECTION
SCALE: 1/2" = 1'-0" — A

NOTE:

1. REFER TO SHEET ZOS21 FOR STRUCTURAL GENERAL NOTES
2. REFER TO MECHANICAL/VENDOR DRAWINGS FOR WATERPROOF HATCHES/MANHOLES HATCHES SHALL BE SIZED PER PUMP MANUFACTURER AND SHALL BE FLUSHED WITH THE PROPOSED TOP SLAB
3. CONTRACTOR SHALL FIELD VERIFY AND COORDINATE ALL DIMENSION W/MEP & CIVIL PLANS PRIOR TO BIDDING WORK.
4. REFER TO ELECTRICAL FOR RADAR LEVEL SENSOR OPENINGS & MECHANICAL DRAWING FOR OTHER PIPE PENETRATIONS, CONDUITS, VENTS ETC.
5. REFER TO SPECS 09901 FOR WET WELL WALL CLEANING & COATING SPECS.

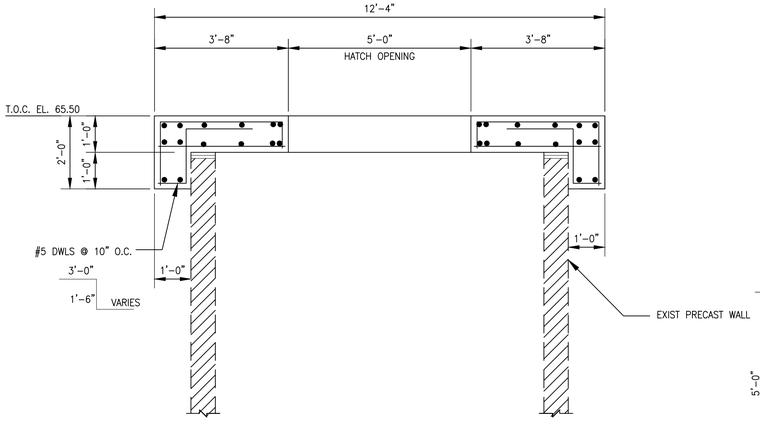

SECTION
SCALE: 1/2" = 1'-0" — B

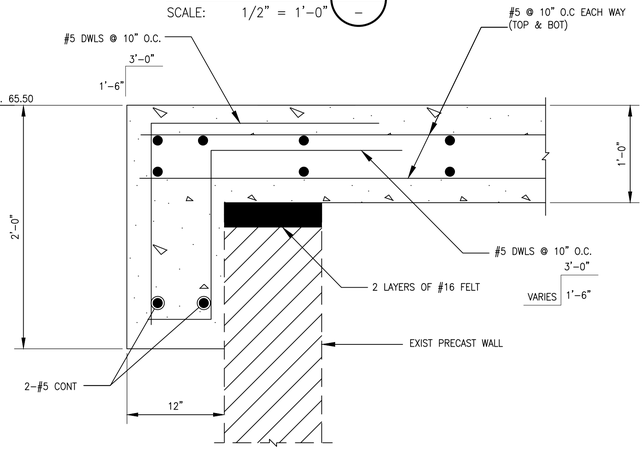

TYPICAL CORNER DETAIL C
SCALE: 1/2" = 1'-0"

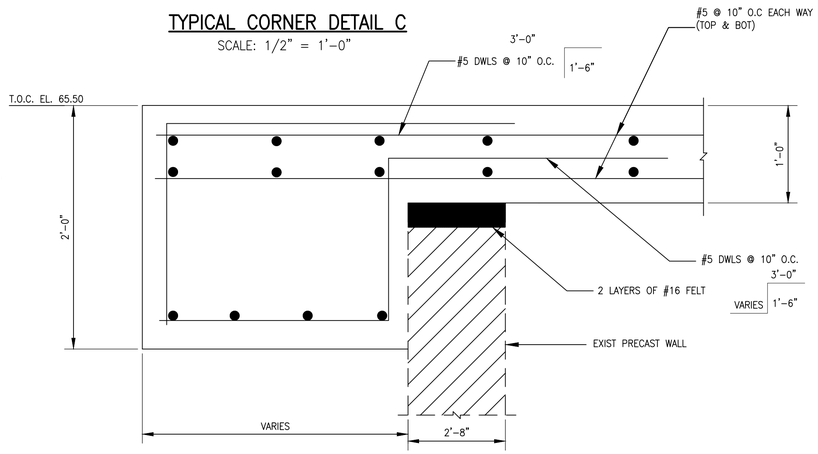

TYPICAL CORNER DETAIL D
SCALE: 1/2" = 1'-0"

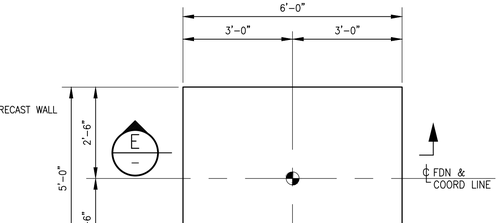

PLAN
POWER/CONTROL CABINET
SCALE: 1/2" = 1'-0"

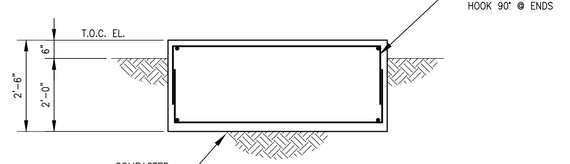

SECTION
SCALE: 1/2" = 1'-0" — E

REVISION	NO.	DATE	APP.

FCM Engineers, PC
3300 S. Gessner Rd. Suite 249
T- 713-706-4412
F- 713-706-4410
Tx Firm No. 13481

HATCH
750 TOWN & COUNTRY BLVD
SUITE 650
HOUSTON, TX 77024
P: 832-930-7670
TX FIRM NUMBER: F-314

SURVEYED BY:
AMANI ENGINEERING, INC
FB NO. P-6357

STATE OF TEXAS — CHARLES C.A. MGBEIKE — 73307 — LICENSED PROFESSIONAL ENGINEER — 05/19/26

CITY OF HOUSTON
HOUSTON PUBLIC WORKS

LIFT STATION RENEWAL & REPLACEMENT PROJECT
POST OAK #2 LIFT STATION
PROPOSED STRUCTURAL PLAN, SECTION & DETAILS

WBS NUMBER	FOR CITY OF HOUSTON USE ONLY
R-000267-0173-4	
DRAWING SCALE	
AS NOTED	
CITY OF HOUSTON PM	
NUPUR KRISHNAN P.E. N.K.	
C1S05	SHEET NO. 56 OF 274

HOUSTON PUBLIC WORKS
ACCEPTED AND FILED
82825
CITY DRAWING NUMBER
Approval Date 08/14/26
HOUSTON TX

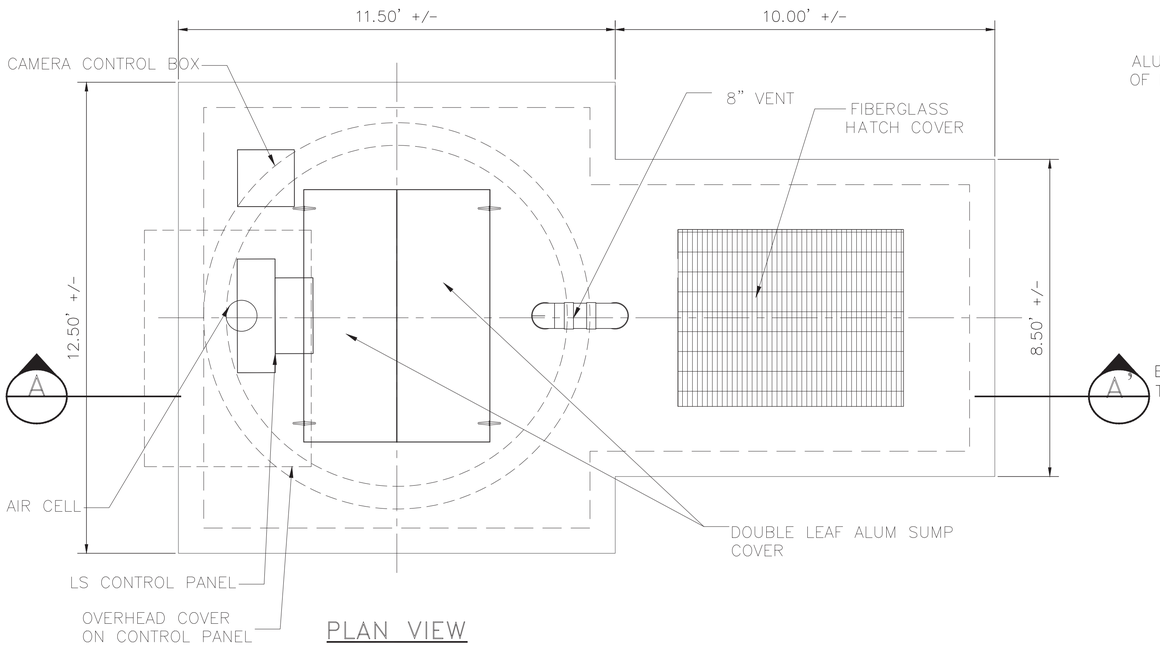

PLAN VIEW

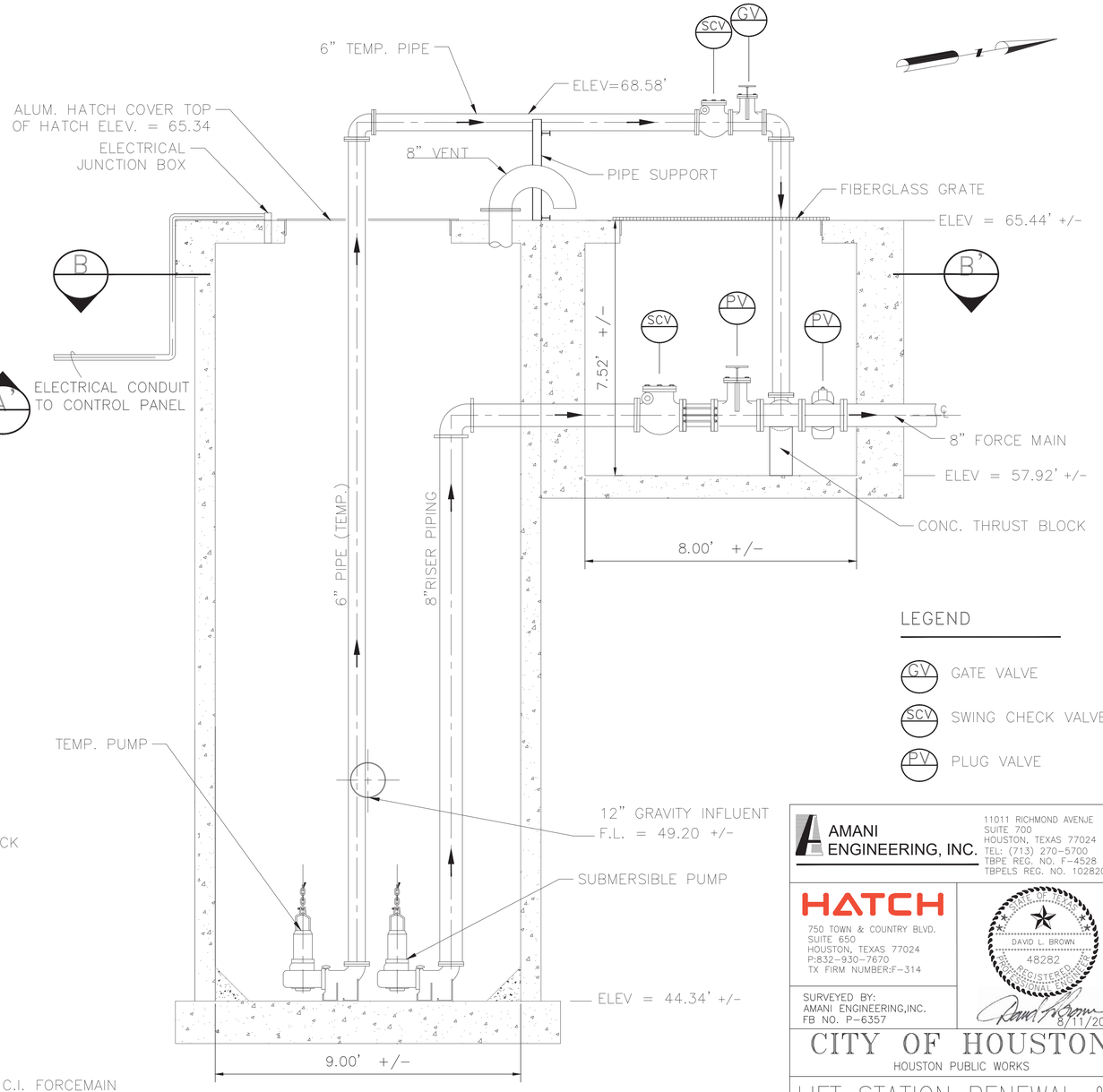

SECTION A–A

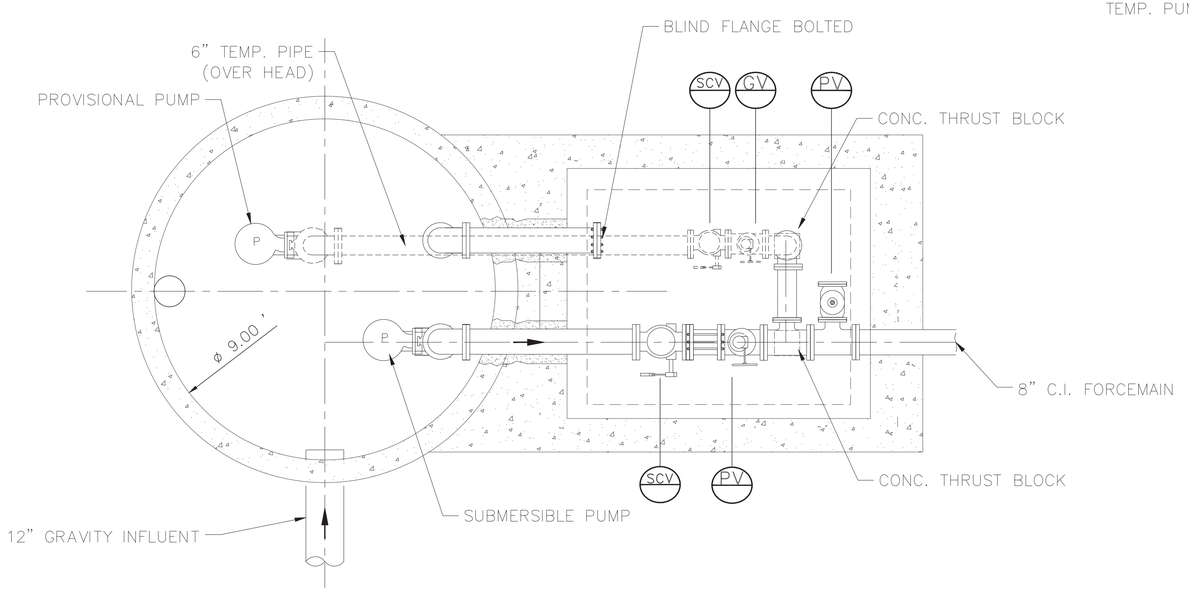

SECTION B–B

LEGEND

- GV — GATE VALVE
- SCV — SWING CHECK VALVE
- PV — PLUG VALVE

AMANI ENGINEERING, INC.
11011 RICHMOND AVENUE
SUITE 700
HOUSTON, TEXAS 77024
TEL: (713) 270-5700
TBPE REG. NO. F-4528
TBPELS REG. NO. 1028200

HATCH
750 TOWN & COUNTRY BLVD.
SUITE 650
HOUSTON, TEXAS 77024
P:832-930-7670
TX FIRM NUMBER:F-314

SURVEYED BY:
AMANI ENGINEERING,INC.
FB NO. P-6357

STATE OF TEXAS
DAVID L. BROWN
48282
REGISTERED PROFESSIONAL LAND SURVEYOR
8/11/2026

CITY OF HOUSTON

HOUSTON PUBLIC WORKS

LIFT STATION RENEWAL & REPLACEMENT PROJECT

POST OAK #2 LIFT STATION
EXISTING MECHANICAL PLAN & SECTION

WBS NUMBER	FOR CITY OF HOUSTON USE ONLY
R-000267-0173-4	HOUSTON PUBLIC WORKS ACCEPTED AND FILED 82825 CITY DRAWING NUMBER Approval Date 08/14/26 HOUSTON TX
DRAWING SCALE	
Scale 1"=2'	
CITY OF HOUSTON PM	
N.K. NUPUR KRISHNAN, PE	
SHEET NO. 57 OF 246	

C1M11

0 1 2 3 ORIGINAL SCALE IN INCHES FOR REDUCED PLANS

FILE NAME:
PLOTTED ON:

P:\Code\2024\24013 - Hatch - COH FY20 Lift Stations\CAD_DWG\LIFT STATIONS EXISTING PLAN & SECTIONS\1-POST OAK #2\LS- POST OAK #2.dwg

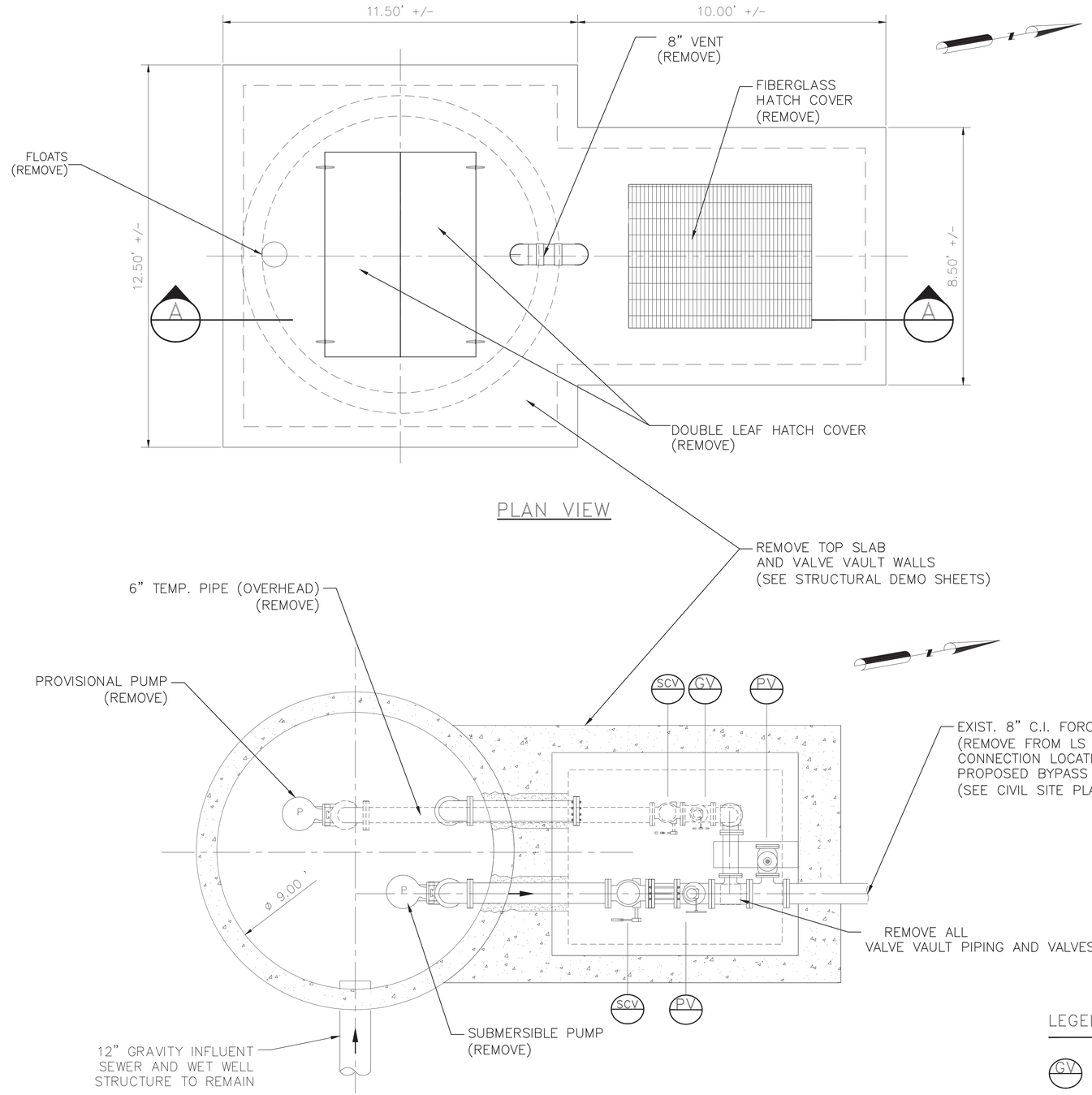

PLAN VIEW

SECTION B–B

LEGEND

- GV — GATE VALVE (REMOVE)
- SCV — SWING CHECK VALVE (REMOVE)
- PV — PLUG VALVE (REMOVE)

DEMOLITION NOTES:

1. THIS DRAWING IS BASED ON AVAILABLE RECORDS AND FIELD OBSERVATIONS. THE CONTRACTOR SHALL SATISFY HIMSELF / HERSELF OF THE ACTUAL CONDITIONS EXISTING AT THE SITE. THIS DRAWING DEPICTS PRIMARY MECHANICAL FEATURES. NOT ALL FEATURES, INCLUDING ELECTRICAL ARE NECESSARILY DEPICTED HEREON. THE CONTRACTOR SHALL BE RESPONSIBLE FOR REMOVING ALL EXISTING EQUIPMENT WITHIN THE EXISTING STRUCTURE AS A PRECURSOR TO CONSTRUCTION OF THE PROPOSED IMPROVEMENTS.
2. DEMOLISH AND REMOVE TOP AND SIDE WALLS OF LIFT STATION TO 2-FEET 6-INCHES BELOW LIFT STATION TOP SLAB ELEVATION. STEEL IN WALLS TO REMAIN (WHERE POSSIBLE) AND BE USED TO DEVELOP REINFORCEMENT FOR NEW TOP SLAB (REFER TO STRUCTURAL DETAILS).
3. THE CONTRACTOR SHALL NOT PROCEED WITH DEMOLITION WORK UNTIL AUTHORIZED. LIFT STATION BYPASS PUMPING MUST BE IN PLACE WITH OPERATIONAL ADEQUACY CHECKED AND CONFIRMED BY THE CITY BEFORE PROCEEDING WITH DEMOLITION WORK.
4. THE CONTRACTOR SHALL BE RESPONSIBLE FOR OBTAINING ANY PERMIT(S) REQUIRED FOR DEMOLITION WORK.
5. ALL ITEMS DAMAGED OR REMOVED BY THE CONTRACTOR AND NOT SPECIFICALLY DESIGNATED FOR DEMOLITION SHALL BE REPAIRED OR REPLACED BY THE CONTRACTOR AT NO COST TO THE CITY.
6. THE CONTRACTOR MAY DISCHARGE LIQUID WASTE AND WASH DOWN TO THE CITY WASTEWATER COLLECTION SYSTEM, HOWEVER; ALL DISCHARGES MUST BE COMPLIANT WITH THE CITY'S INDUSTRIAL WASTE ORDINANCE, CHAPTER 47, ARTICLE V. THE CONTRACTOR IS ADVISED THAT A PERMIT OR TEMPORARY DISCHARGE AUTHORIZATION MAY BE REQUIRED. CONTACT THE INDUSTRIAL WASTEWATER DIVISION AT (832) 395-5800. IN LIEU OF A DISCHARGE AUTHORIZATION, THE CONTRACTOR SHALL COLLECT AND HAUL, AT CONTRACTOR EXPENSE, ALL NON-SOLID DISCHARGES TO AN APPROVED CITY FACILITY.
7. REFER TO STRUCTURAL AND ELECTRICAL DEMOLITION DRAWINGS FOR INFORMATION RELATED TO THOSE SPECIFIC ACTIVITIES.
8. THE CITY SHALL HAVE THE FIRST RIGHT OF REFUSAL TO RETAIN OR SALVAGE ALL ITEMS SHOWN TO BE DEMOLISHED AND/OR REMOVED, INCLUDING BUT NOT LIMITED TO PUMPS, HATCHES, AND ELECTRICAL AND INSTRUMENTATION COMPONENTS. PRIOR TO INITIATING DEMO WORK, THE CONTRACTOR AND THE DESIGNATED FIELD INSPECTOR SHALL MAKE A JOINT INSPECTION OF EACH SITE TO IDENTIFY ALL EQUIPMENT TO BE RETAINED BY THE CITY FOR SALVAGE AND REUSE. ITEMS IDENTIFIED FOR SALVAGE SHALL BE CAREFULLY REMOVED TO PROTECT FROM DAMAGE. ALL OTHER ITEMS SHOWN TO BE DEMOLISHED / REMOVED THAT ARE NOT RETAINED BY THE CITY SHALL BE PROPERLY REMOVED FROM THE SITE AND HANDLED PER SPECIFICATIONS AT NO ADDITIONAL COST TO THE CITY. CONTACT CITY DESIGNATED CITY REPRESENTATIVE FOR WASTEWATER TREATMENT PLANT SALVAGE AT LEAST 72 HOURS PRIOR TO DEMOLITION IN ORDER TO COORDINATE REMOVAL OF ANY ITEMS THE CITY WISHES TO CLAIM AND SALVAGE. THE CONTRACTOR SHALL DELIVER ALL SALVAGE ITEMS TO A LOCATION WITHIN THE CITY DETERMINED BY THE CITY

AMANI ENGINEERING, INC.
11011 RICHMOND AVENUE
SUITE 700
HOUSTON, TEXAS 77024
TEL: (713) 270-5700
TBPE REG. NO. F-4528
TBPELS REG. NO. 1028200

HATCH
750 TOWN & COUNTRY BLVD.
SUITE 650
HOUSTON, TEXAS 77024
P:832-930-7670
TX FIRM NUMBER: F-314

SURVEYED BY:
AMANI ENGINEERING,INC.
FB NO. P-6357

STATE OF TEXAS
DAVID L. BROWN
48282
REGISTERED PROFESSIONAL ENGINEER
8/11/2026

CITY OF HOUSTON
HOUSTON PUBLIC WORKS

LIFT STATION RENEWAL & REPLACEMENT PROJECT

POST OAK #2 LIFT STATION
EXISTING SURFACE PLAN VIEW
MECHANICAL DEMOLITION

WBS NUMBER	R-000267-0173-4
DRAWING SCALE	Scale 1"=2'
CITY OF HOUSTON PM	N.K. NUPUR KRISHNAN, PE

FOR CITY OF HOUSTON USE ONLY

HOUSTON PUBLIC WORKS
ACCEPTED AND FILED
82825
CITY DRAWING NUMBER
Approval Date 08/14/26
HOUSTON TX

C1M12

SHEET NO. 58 OF 274

FILE NAME:
PLOTTED ON:

0 1 2 3 ORIGINAL SCALE IN INCHES FOR REDUCED PLANS

P:\Cad\2024\24013 - Hatch - COH FY20 Lift Stations\CAD_DWG\LIFT STATIONS MECHANICAL DEMOLITION PLAN\1-POST OAK #2\LS- POST OAK #2 DEMOLITION 11 2025.dwg

THE CITY SHALL HAVE THE FIRST RIGHT OF REFUSAL TO RETAIN OR SALVAGE ALL ITEMS SHOWN TO BE DEMOLISHED AND/OR REMOVED, INCLUDING BUT NOT LIMITED TO PUMPS, HATCHES, AND ELECTRICAL AND INSTRUMENTATION COMPONENTS. PRIOR TO INITIATING DEMO WORK, THE CONTRACTOR AND THE DESIGNATED FIELD INSPECTOR SHALL MAKE A JOINT INSPECTION OF EACH SITE TO IDENTIFY ALL EQUIPMENT TO BE RETAINED BY THE CITY FOR SALVAGE AND REUSE. ITEMS IDENTIFIED FOR SALVAGE SHALL BE CAREFULLY REMOVED TO PROTECT FROM DAMAGE. ALL OTHER ITEMS SHOWN TO BE DEMOLISHED / REMOVED THAT ARE NOT RETAINED BY THE CITY SHALL BE PROPERLY REMOVED FROM THE SITE AND HANDLED PER SPECIFICATIONS AT N O ADDITIONAL COST TO THE CITY. CONTACT CITY DESIGNATED CITY REPRESENTATIVE FOR WASTEWATER TREATMENT PLANT SALVAGE AT LEAST 72 HOURS PRIOR TO DEMOLITION IN ORDER TO COORDINATE REMOVAL OF ANY ITEMS THE CITY WISHES TO CLAIM AND SALVAGE. THE CONTRACTOR SHALL DELIVER ALL SALVAGE ITEMS TO A LOCATION WITHIN THE CITY DETERMINED BY THE CITY.

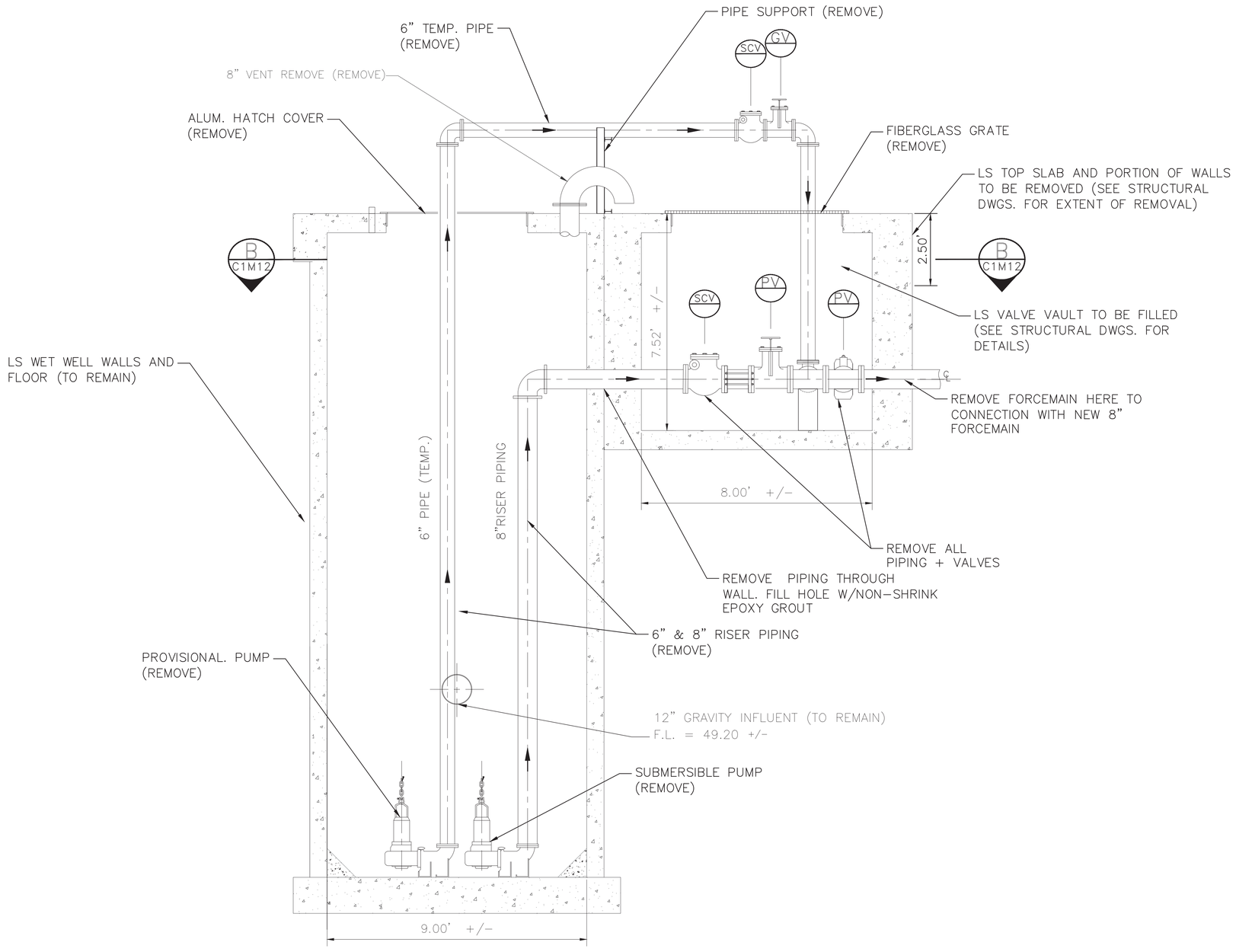

SECTION A-A

LEGEND

- GV — GATE VALVE (REMOVE)
- SCV — SWING CHECK VALVE (REMOVE)
- PV — PLUG VALVE (REMOVE)

AMANI ENGINEERING, INC.
11011 RICHMOND AVENUE
SUITE 700
HOUSTON, TEXAS 77024
TEL: (713) 270-5700
TBPE REG. NO. F-4528
TBPELS REG. NO. 1028200

HATCH
750 TOWN & COUNTRY BLVD.
SUITE 650
HOUSTON, TEXAS 77024
P:832-930-7670
TX FIRM NUMBER: F-314

SURVEYED BY:
AMANI ENGINEERING,INC.
FB NO. P-6357

STATE OF TEXAS
DAVID L. BROWN
48282
REGISTERED PROFESSIONAL ENGINEER
8/11/2026

CITY OF HOUSTON
HOUSTON PUBLIC WORKS

LIFT STATION RENEWAL & REPLACEMENT PROJECT

POST OAK #2 LIFT STATION
EXISTING SURFACE PLAN VIEW
MECHANICAL DEMOLITION

WBS NUMBER	FOR CITY OF HOUSTON USE ONLY
R-000267-0173-4	HOUSTON PUBLIC WORKS ACCEPTED AND FILED 82825 CITY DRAWING NUMBER Approval Date 08/14/26 HOUSTON TX
DRAWING SCALE	
Scale 1"=2'	
CITY OF HOUSTON PM	
N.K. NUPUR KRISHNAN, PE	
SHEET NO. 59 OF 274	

C1M13

FILE NAME:
PLOTTED ON:

ORIGINAL SCALE IN INCHES
FOR REDUCED PLANS
0 1 2 3

P:\Cords\2024\24013 - Hatch - COH FY20 Lift Stations\CAD_DWG\LIFT STATIONS MECHANICAL DEMOLITION PLANS\1-POST OAK #2\LS- POST OAK #2 DEMOLITION 11_2025.dwg

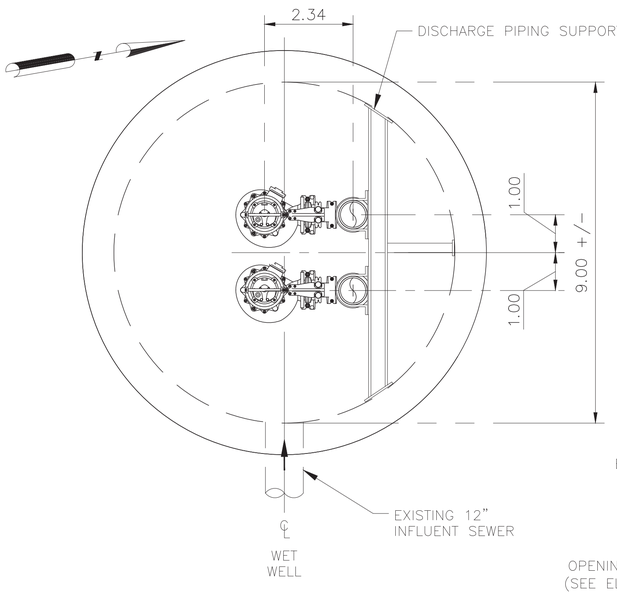

DISCHARGE PIPING SUPPORT

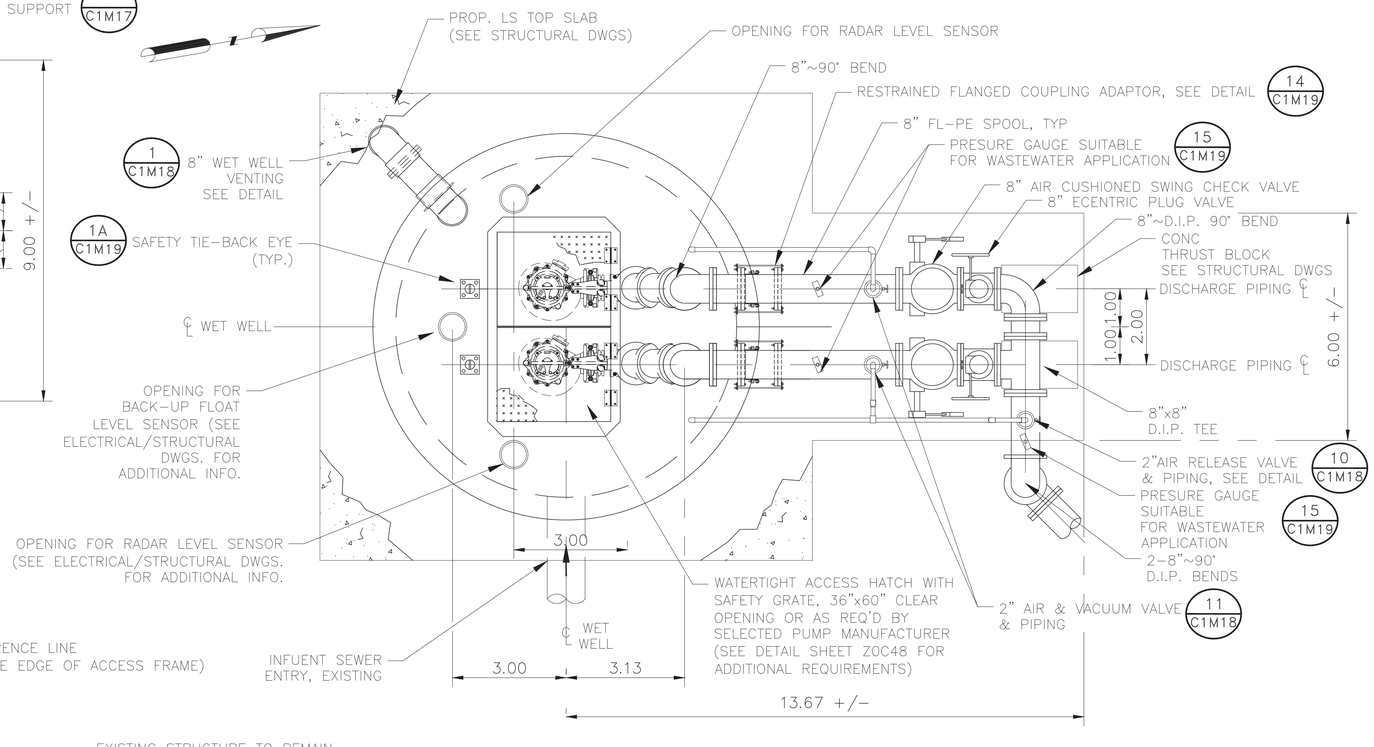

PLAN VIEW
LIFT STATION TOP SLAB

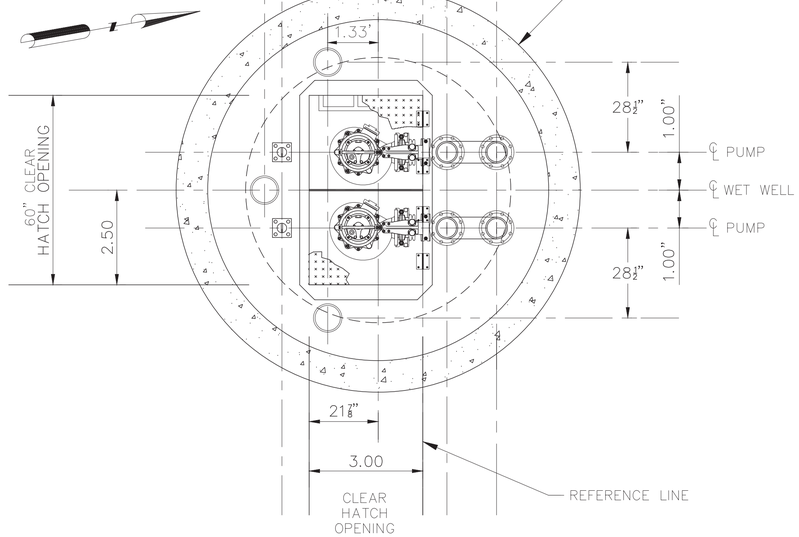

MECHANICAL POSITIONING

NOTES:

A. LOCATE ANCHOR BOLTS USING CLEAR INSIDE EDGE OF ACCESS FRAME AND CENTER LINE OF PUMP AS REF. POINT. BOLT LOCATIONS MUST BE HELD TO MAINTAIN EXACT POSITION OF PUMP RELATIVE TO ACCESS FRAME

B. FOR COMPLETE OUTLINE DIMENSIONS OF PUMP, CONTACT SELECTED PUMP MANUFACTURER

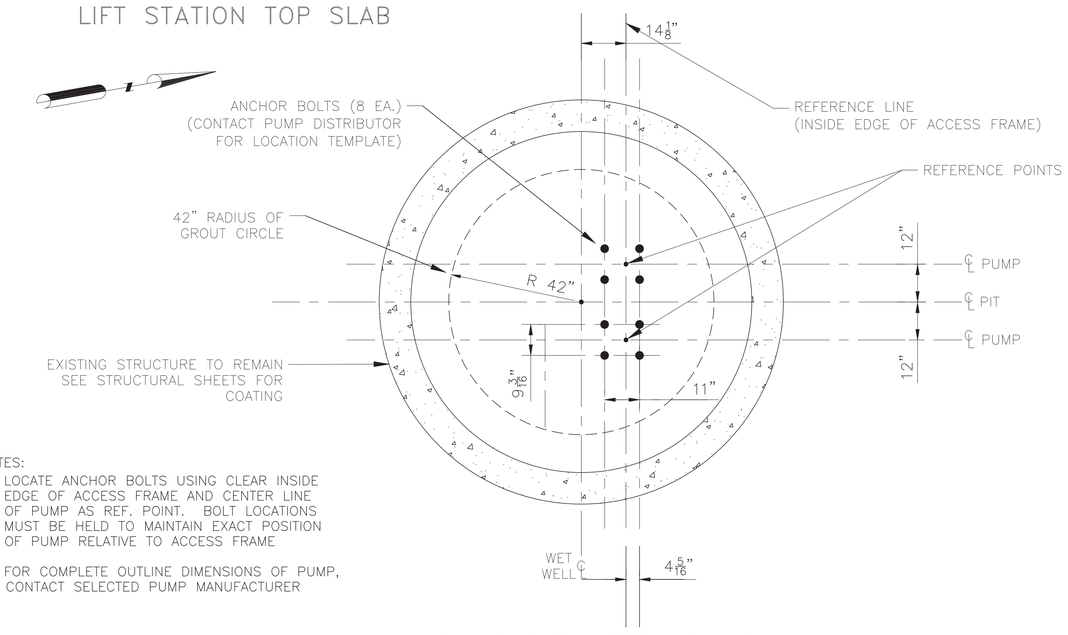

PUMP BASE POSITIONING

NOTES:

1. CONTRACTOR TO VERIFY DIMENSIONS REQUIRED TO INSTALL AND OPERATE VALVES.
2. SEE DETAIL AND STRUCTURAL DRAWINGS FOR DIMENSIONS AND INFORMATION NOT SHOWN.
3. CONTRACTOR TO CONFIRM SIZE AND LOCATION OF THE WET WELL HATCHES PER HATCH AND PUMP MANUFACTURER'S REQUIREMENTS.
4. PUMP AND ANCHOR BOLTS ARE TO BE ADHESIVE TYPE, AND EMBEDDED IN THE CONCRETE SLAB. CONTRACTOR TO SUBMIT DESIGN OF PUMP ANCHOR BOLTS AND PATTERN, INCLUDING CALCULATIONS, DURING SHOP DRAWING SUBMISSION.
5. CONTRACTOR TO PROVIDE ADHESIVE ANCHORS IN LIEU OF WEDGE ANCHORS FOR ALL SUBMERGED CONDITIONS AND SUBMIT DESIGN OF ANCHOR BOLTS DURING SHOP DRAWING SUBMISSION.
6. ALL PIPING IN THE WET WELL SHALL BE FLANGED. NO FLANGED COUPLING ADAPTORS, OR VICTAULIC STYLE COUPLINGS SHALL BE PERMITTED INSIDE OF THE WET WELL.
7. INSTALL PLUG VALVES TO OPEN UPWARD AND TO CLOSE TO A SEATING POSITION.
8. INSTALL CHECK VALVES SO THAT THE WEIGHT LEVER POSITION IS APPROXIMATELY 45° BELOW THE VALVE HORIZONTAL CENTER LINE IN THE CLOSE POSITION: AND APPROXIMATELY 45° ABOVE THE HORIZONTAL CENTER LINE IN THE FULL OPEN POSITION.
9. THE ACCESS HATCHES MUST BE WATERTIGHT AND PAINTED FOREST GREEN. THE SAFETY GRATING MUST BE PROVIDED WITH A SAFETY ORANGE POWDER COAT FINISH. COATING REQUIREMENTS SHALL BE IN COMPLIANCE WITH SPECIFICATION REQUIREMENTS.
10. LABEL HATCHES WITH THE CORRESPONDING PUMP NUMBER AND CHECK VALVES WITH THE CORRESPONDING VALVE NUMBER USING A 12-INCH BY 12-INCH PLATE ENGRAVED WITH 6-INCH LETTERING WELDED TO THE HATCHES AND ADHERED TO THE VALVES.
11. COATINGS ARE REQUIRED BY THE CITY OF HOUSTON ON ALL VENT PIPES. COATINGS SHALL COMPLY WITH SPECIFICATIONS 02083, PARAGRAPH 2.11.C.4 AND 0.9901, PARAGRAPH 2.02.G.
12. PRESSURE GAUGES SHALL BE SUITABLE FOR WASTEWATER APPLICATIONS.
13. APPLY PROTECTIVE COATINGS TO PIPES, VALVES AND FITTINGS AS APPLICABLE. LABEL PIPING WITH DIRECTIONAL FLOW ARROWS IN COMPLIANCE WITH SPECIFICATION REQUIREMENTS
14. AIR RELEASE AND AIR VACUUM VALVES TO BE PROVIDED WITH STAINLESS STEEL BODIES IN COMPLIANCE WITH SPECIFICATION REQUIREMENTS.

NO.	DATE	REVISION	APP.

AMANI ENGINEERING, INC.
11011 RICHMOND AVENUE
SUITE 700
HOUSTON, TEXAS 77024
TEL: (713) 270-5700
TBPE REG. NO. F-4528
TBPELS REG. NO. 1028200

HATCH
750 TOWN & COUNTRY BLVD.
SUITE 650
HOUSTON, TEXAS 77024
P:832-930-7670
TX FIRM NUMBER: F-314

SURVEYED BY:
AMANI ENGINEERING,INC.
FB NO. P-6357

STATE OF TEXAS
DAVID L. BROWN
48282
REGISTERED
PROFESSIONAL
ENGINEER
8/11/2026

CITY OF HOUSTON
HOUSTON PUBLIC WORKS

LIFT STATION RENEWAL & REPLACEMENT PROJECT

POST OAK #2 LIFT STATION
PROPOSED MECHANICAL
PLAN VIEW & GRADE

WBS NUMBER	FOR CITY OF HOUSTON USE ONLY
R-000267-0173-4	HOUSTON PUBLIC WORKS ACCEPTED AND FILED 82825 CITY DRAWING NUMBER Approval Date 08/14/26 HOUSTON TX
DRAWING SCALE	
Scale 1"=2'	
CITY OF HOUSTON PM	
NUPUR KRISHNAN, PE.	
C1M14	SHEET NO. 60 OF 274

FILE NAME:
PLOTTED ON:

0 1 2 3 ORIGINAL SCALE IN INCHES FOR REDUCED PLANS

P:\Cad\2024\24013 - Hatch - COH FY20 Lift Stations\CAD_DWG\Phase II\1-Phase II POST OAK #2\Phase II LS- POST OAK #2.dwg

NO.	DATE	REVISION	APP.

SHEET NOT USED

HATCH

750 TOWN & COUNTRY BLVD
SUITE 650
HOUSTON, TX 77024
P: 832-930-7670
TX FIRM NUMBER: F-314

SURVEYED BY:
AMANI ENGINEERING, INC.
FB NO. P-6357

STATE OF TEXAS
MARK G. SCALLY
136279
LICENSED PROFESSIONAL ENGINEER
8/14/26

CITY OF HOUSTON
HOUSTON PUBLIC WORKS

LIFT STATION RENEWAL & REPLACEMENT PROJECT

WBS NUMBER
R-000267-0173-4
DRAWING SCALE
AS NOTED
CITY OF HOUSTON PM
NUPUR KRISHNAN P.E. N.K.
SHEET NO. 61 OF 274

FOR CITY OF HOUSTON USE ONLY

HOUSTON PUBLIC WORKS
ACCEPTED AND FILED
82825
CITY DRAWING NUMBER
Approval Date 08/14/26
HOUSTON TX

C1M15

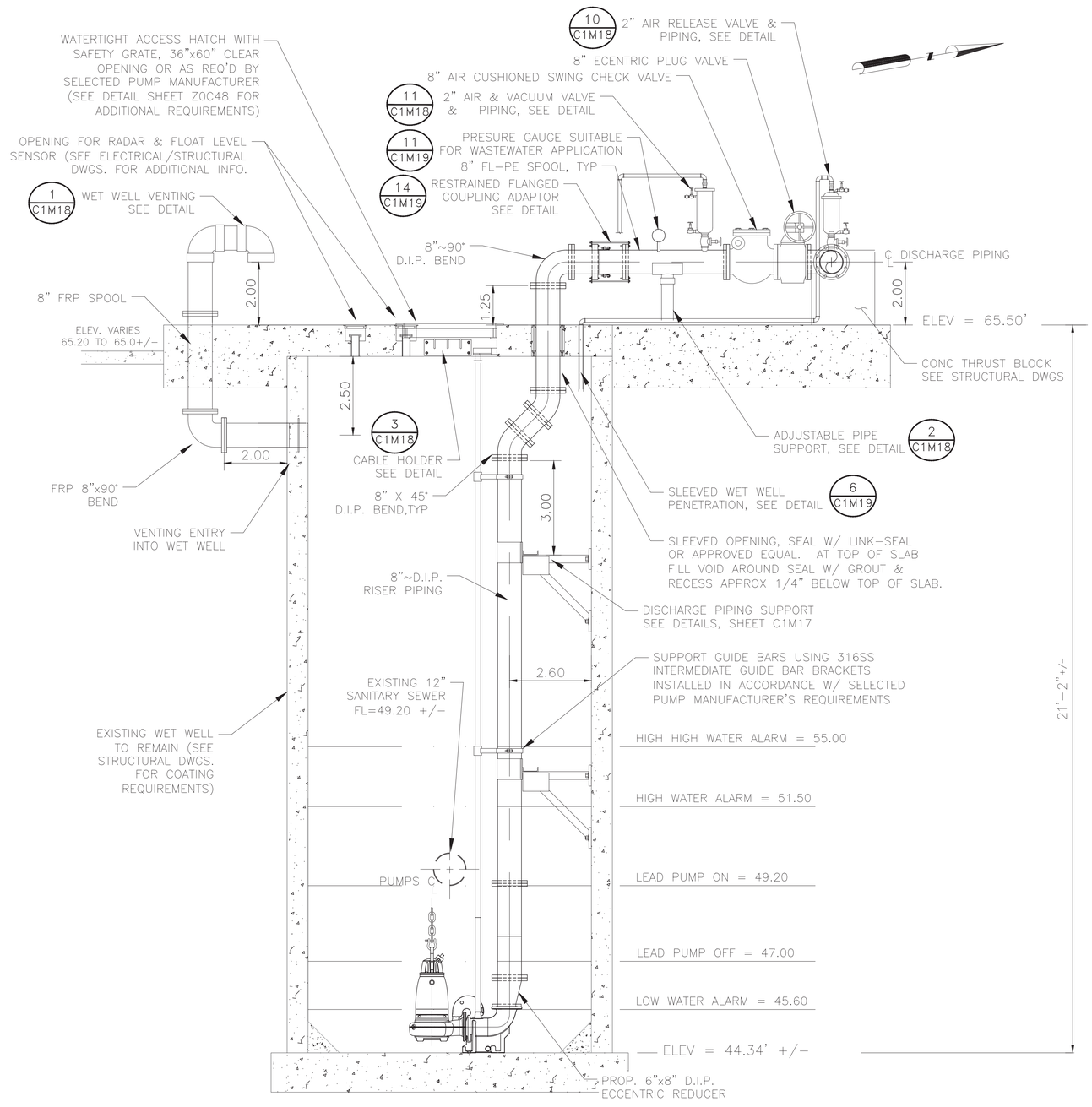

LIFT STATION EXISTING WET WELL WITH PROPOSED MECHANICAL UPGRADE

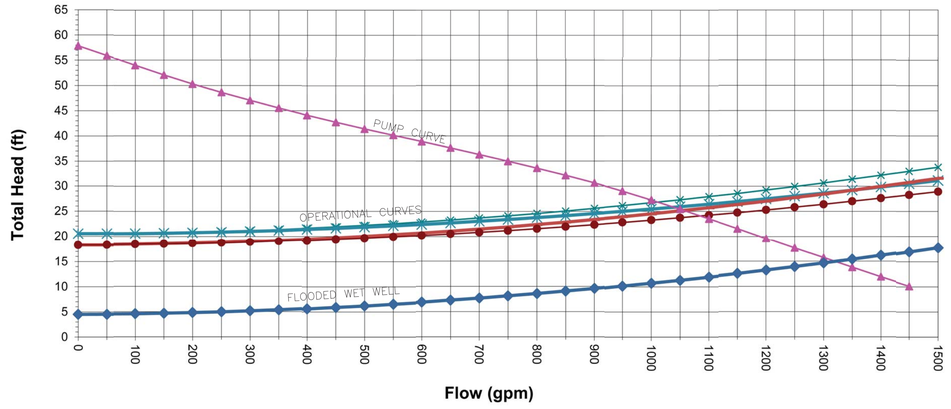

PUMP DATA TABLE

PUMP CHARACTERISTICS	PUMP NO. 1	PUMP NO. 2
MOTOR DATA NOMINAL SIZE (HP) MAX SPEED (RPM)	 20 1760	 20 1760
SOLIDS PASSAGE MIN SPHERE (IN)	 3	 3
CAPACITY (GPM) DESIGN RUNOUT	 1025 1850	 1025 1850
DISCHARGE HEAD (FT) DESIGN RUNOUT SHUT OFF	 26 2.5 58	 26 2.5 58
EFFICIENCY (%) DESIGN	 73	 73
NPSHR (FT) DESIGN RUNOUT	 22.2 32	 22.2 32
PUMP CYCLE TIME	10+	10+
CUMULATIVE CAPACITY (GPM)	1025	STANDBY

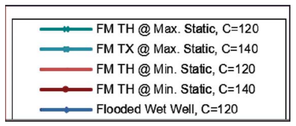

NOTE: ALL PUMPS TO BE PROVIDED WITH COOLING JACKETS TO ALLOW LOWERING WET WELL LEVEL TO "ALL PUMPS OFF" SETTING

STATION OPERATION TABLES

	RISING LEVEL CYCLE		
WATER LEVEL DEPTH	WATER LEVEL ELEVATION	ACTION	PUMP(S) IN OPERATION
2.66-FT.	47.00	PUMPS OFF LEVEL – NO ACTION	ALL PUMPS ARE OFF
4.86-FT.	49.20	LEAD PUMP TURNS ON	LEAD PUMP ON (FIRM PUMP)
7.16-FT.	51.50	HIGH WATER ALARM ON	HIGH WATER ALARM SOUND
10.66-FT.	55.00	HIGH HIGH WATER ALARM (FLOAT ON LEVEL)	LEAD PUMP ON (FLOATS)
	FALLING LEVEL CYCLE		
WATER LEVEL DEPTH	WATER LEVEL ELEVATION	ACTION	PUMP(S) IN OPERATION
7.16-FT.	51.50	FLOAT OFF LEVEL	LEAD PUMP OFF (FLOATS)
4.86-FT.	49.20	HIGH WATER ALARM OFF	LEAD PUMP ON
2.66-FT.	47.00	LEAD PUMP TURNS OFF	ALL PUMPS OFF – STANDBY PUMP SWITCHES TO LEAD PUMP
1.26-FT.	45.60	LOW LEVEL ALARM	–

NO.	DATE	REVISION	APP.

AMANI ENGINEERING, INC.
11011 RICHMOND AVENUE
SUITE 700
HOUSTON, TEXAS 77024
TEL: (713) 270-5700
TBPE REG. NO. F-4528
TBPELS REG. NO. 1028200

HATCH
750 TOWN & COUNTRY BLVD.
SUITE 650
HOUSTON, TEXAS 77024
P:832-930-7670
TX FIRM NUMBER: F-314

SURVEYED BY:
AMANI ENGINEERING,INC.
FB NO. P-6357

STATE OF TEXAS
DAVID L. BROWN
48282
REGISTERED PROFESSIONAL LAND SURVEYOR
8/11/2026

CITY OF HOUSTON
HOUSTON PUBLIC WORKS

LIFT STATION RENEWAL & REPLACEMENT PROJECT

POST OAK #2 LIFT STATION
PROPOSED MECHANICAL
ELEVATION SECTION

WBS NUMBER	R-000267-0173-4
DRAWING SCALE	Scale 1"=2'
CITY OF HOUSTON PM	N.K. NUPUR KRISHNAN, PE
	SHEET NO. 62 OF 274

FOR CITY OF HOUSTON USE ONLY

HOUSTON PUBLIC WORKS
ACCEPTED AND FILED
82825
CITY DRAWING NUMBER
Approval Date 08/14/26
HOUSTON TX

C1M16

FILE NAME:
PLOTTED ON:

0 1 2 3 ORIGINAL SCALE IN INCHES FOR REDUCED PLANS

P:\Cad\2024\24013 - Hatch - COH FY20 Lift Stations\CAD_DWG\Phase II\1-Phase II POST OAK #2\Phase II LS- POST OAK #2.dwg

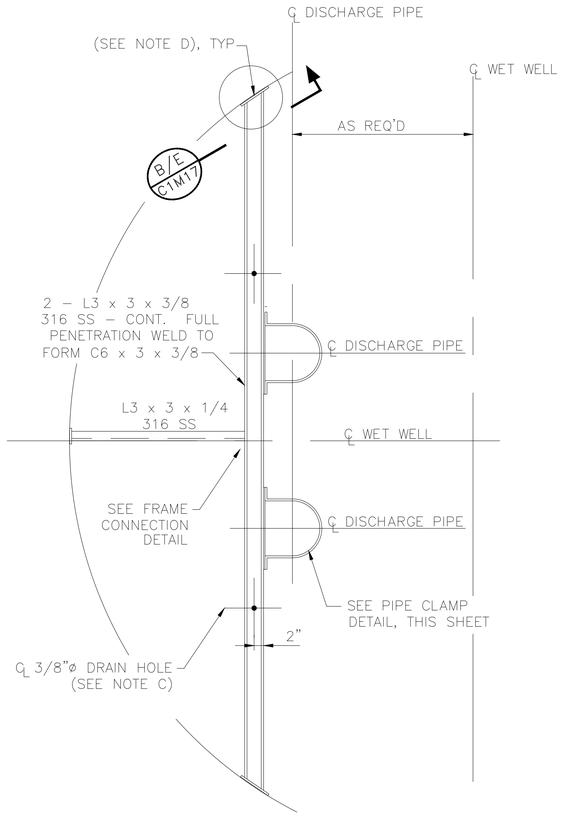

DISCHARGE PIPING SUPPORT PLAN
N.T.S.

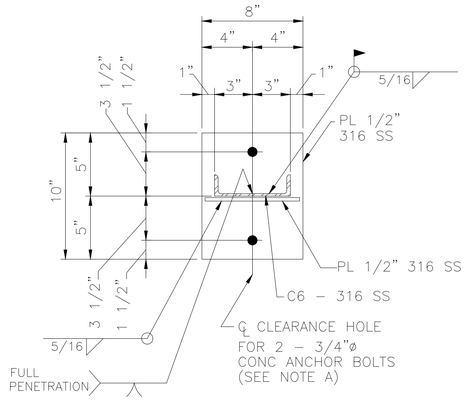

DETAIL 'B'
N.T.S.

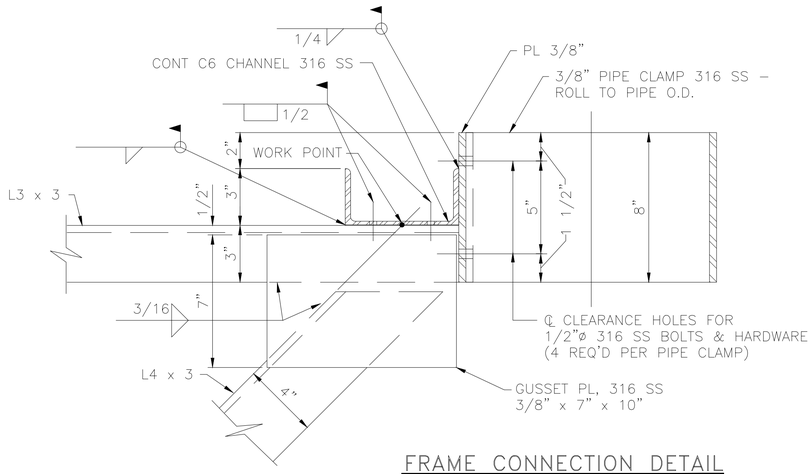

FRAME CONNECTION DETAIL
N.T.S.

NOTES:

A. CONCRETE ANCHOR BOLTS SHALL HAVE 6" MINIMUM EMBEDMENT AND SHALL BE TYPE 316 STAINLESS STEEL, PER SPECIFICATIONS.

B. SEE STATION AND STRUCTURAL DRAWINGS FOR DIMENSIONS AND INFORMATION NOT SHOWN.

C. DRILL 3/8"ø HOLES, 1" OFF CENGER OF C6 AT MIDSPAN BETWEEN LATERAL PIPE SUPPORTS TO ALLOW FOR DRAINAGE. 3 HOLES PER CHANNEL WHERE 2 LATERAL SUPPORTS REQUIRED; 2 HOLES PER CHANNEL WHERE 1 LATERAL SUPPORT REQUIRED.

D. SET 1/4" NEOPRENE GASKET ON WALL SURFACE IN SIKA 1A (OR EQUAL) SEALANT.

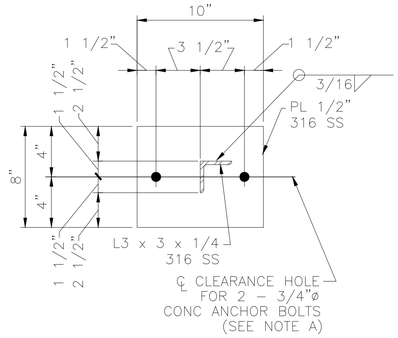

DETAIL 'C'
N.T.S.

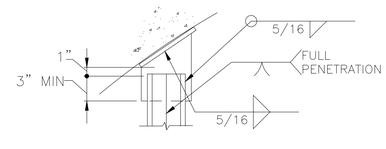

DETAIL 'E'
N.T.S.

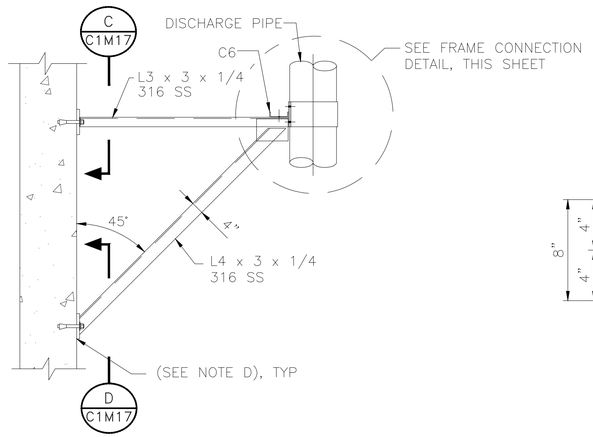

LATERAL PIPE SUPPORT FRAME
N.T.S.

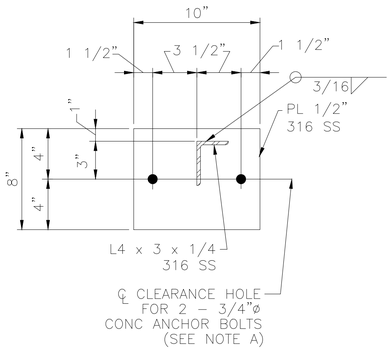

DETAIL 'D'
N.T.S.

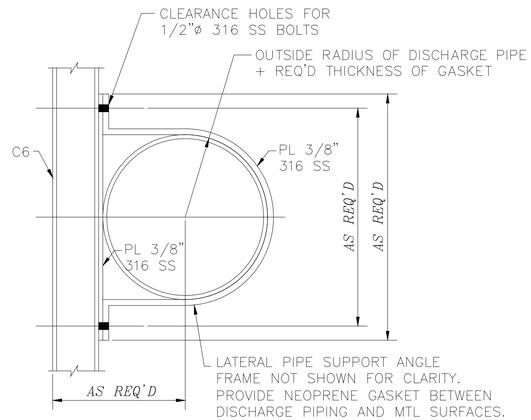

PIPE CLAMP DETAIL
N.T.S.

0 1 2 3 ORIGINAL SCALE IN INCHES FOR REDUCED PLANS

NO.	DATE	REVISION	APP.

AMANI ENGINEERING, INC.
11011 RICHMOND AVENUE
SUITE 700
HOUSTON, TEXAS 77024
TEL: (713) 270-5700
TBPE REG. NO. F-4528
TBPELS REG. NO. 1028200

HATCH
750 TOWN & COUNTRY BLVD.
SUITE 650
HOUSTON, TEXAS 77024
P:832-930-7670
TX FIRM NUMBER: F-314

SURVEYED BY:
AMANI ENGINEERING,INC.
FB NO. P-6357

STATE OF TEXAS
DAVID L. BROWN
48282
REGISTERED
PROFESSIONAL
8/11/2026

CITY OF HOUSTON
HOUSTON PUBLIC WORKS

LIFT STATION RENEWAL & REPLACEMENT PROJECT

POST OAK #2 LIFT STATION
PROPOSED DISCHARGE PIPING
SUPPORT DETAILS

WBS NUMBER
R-000267-0173-4
DRAWING SCALE
Scale N.T.S.
CITY OF HOUSTON PM
N.K. NUPUR KRISHNAN, PE

FOR CITY OF HOUSTON USE ONLY

HOUSTON PUBLIC WORKS
ACCEPTED AND FILED
82825
CITY DRAWING NUMBER
Approval Date 08/14/26
HOUSTON TX

C1M17

SHEET NO. 63 OF 274

FILE NAME:
PLOTTED ON:

P:\Cody\2024\24013 - Hatch - COH FY20 Lift Stations\CAD_DWG\Phase IN\1-Phase II POST OAK #2\Phase II LS- POST OAK #2.dwg

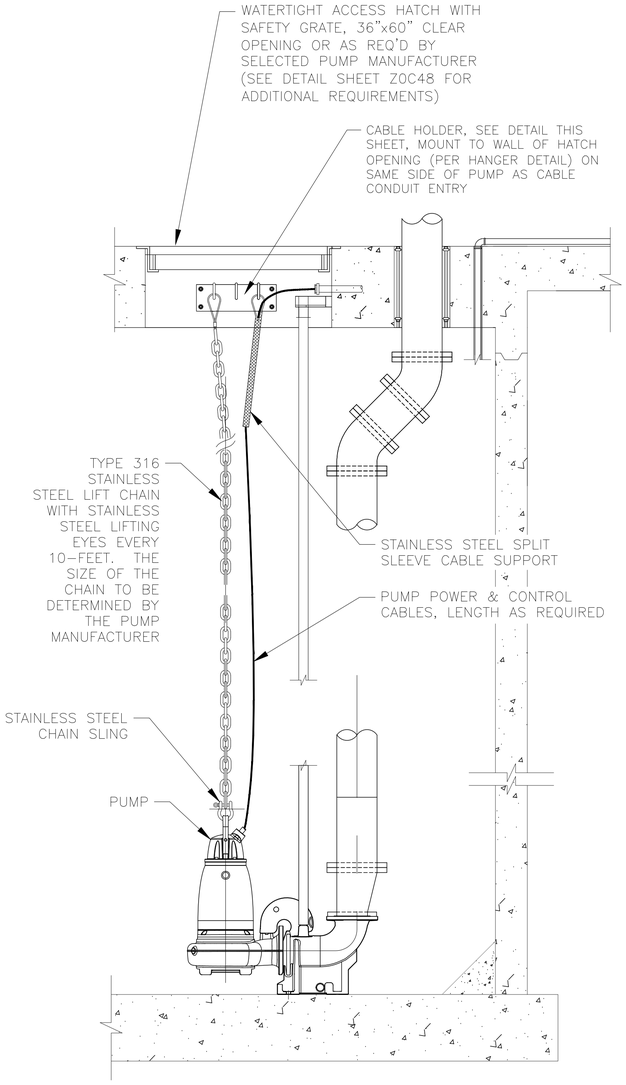

PUMP LIFTING & CABLING DETAIL

N.T.S.

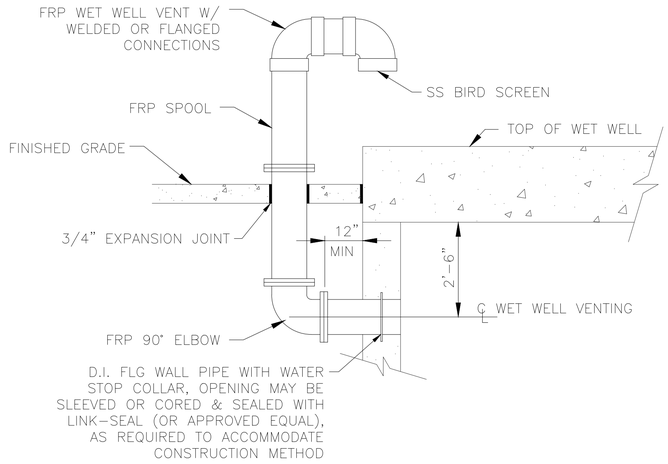

WET WELL VENTING INSTALLATION

DETAIL 1 C1M18

N.T.S.

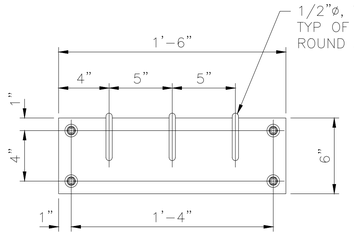

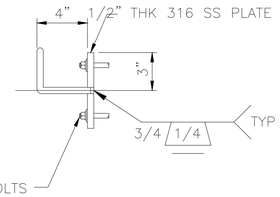

CABLE HOLDER ASSY

N.T.S.

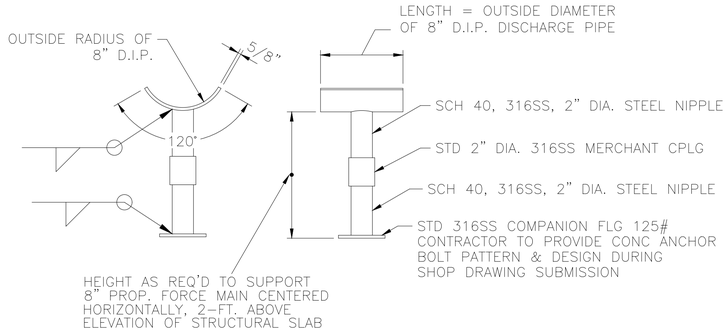

ADJUSTABLE PIPE SUPPORT

DETAIL 2 C1M18

N.T.S.

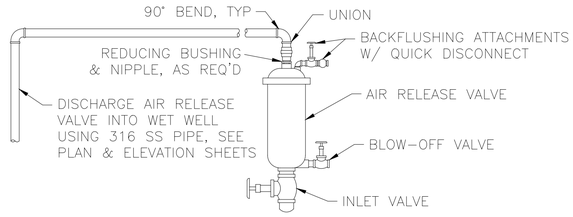

NOTE: PROVIDE STAINLESS STEEL VALVE BODY AND FITTINGS AS MAY BE REQUIRED BY SPECIFICATIONS

AIR RELEASE VALVE ASSY

DETAIL 10 C1M18

N.T.S.

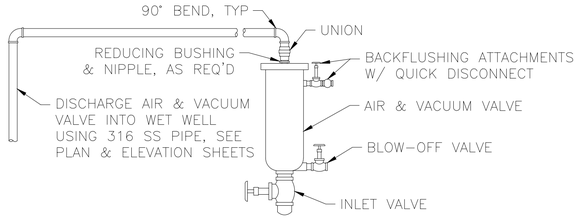

NOTE: PROVIDE STAINLESS STEEL VALVE BODY AND FITTINGS AS MAY BE REQUIRED BY SPECIFICATIONS

AIR & VACUUM VALVE ASSY

DETAIL 11 C1M18

N.T.S.

NO.	DATE	REVISION	APP.

AMANI ENGINEERING, INC.
11011 RICHMOND AVENUE
SUITE 700
HOUSTON, TEXAS 77024
TEL: (713) 270-5700
TBPE REG. NO. F-4528
TBPELS REG. NO. 1028200

HATCH
750 TOWN & COUNTRY BLVD.
SUITE 650
HOUSTON, TEXAS 77024
P:832-930-7670
TX FIRM NUMBER: F-314

SURVEYED BY:
AMANI ENGINEERING,INC.
FB NO. P-6357

STATE OF TEXAS
DAVID L. BROWN
48282
REGISTERED
PROFESSIONAL
8/11/2026

CITY OF HOUSTON

HOUSTON PUBLIC WORKS

LIFT STATION RENEWAL & REPLACEMENT PROJECT

POST OAK #2 LIFT STATION
PROPOSED MECHANICAL DETAILS

WBS NUMBER	FOR CITY OF HOUSTON USE ONLY
R-000267-0173-4	HOUSTON PUBLIC WORKS ACCEPTED AND FILED 82825 CITY DRAWING NUMBER Approval Date 08/14/26 HOUSTON TX
DRAWING SCALE	
Scale N.T.S.	
CITY OF HOUSTON PM	
N.K. NUPUR KRISHNAN, PE	
C1M18	SHEET NO. 64 OF 274

FILE NAME:
PLOTTED ON:

0 1 2 3 ORIGINAL SCALE IN INCHES FOR REDUCED PLANS

P:\Cad\20241\24013 - Hatch - COH FY20 Lift Stations\CAD_DWG\Phase IN\1-Phase II POST OAK #2\Phase II LS- POST OAK #2.dwg

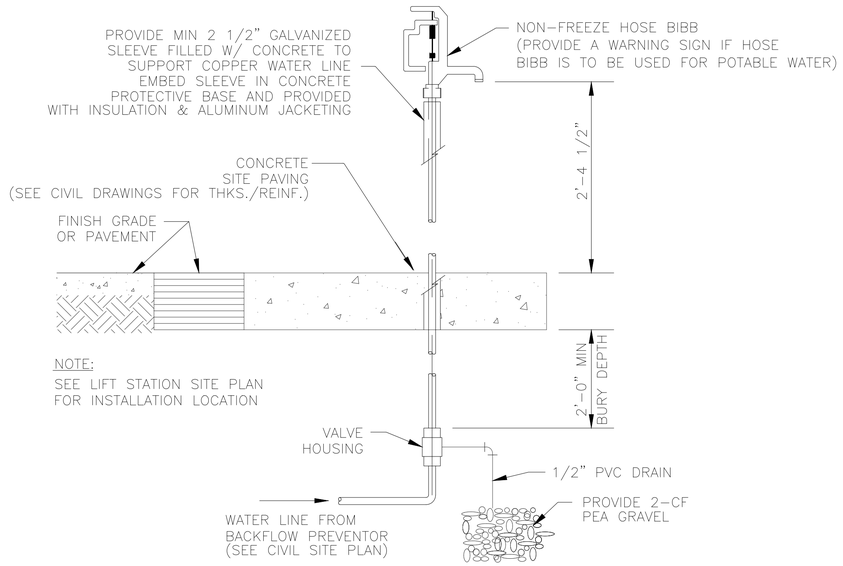

NON-FREEZE HOSE BIBB DETAIL

N.T.S.

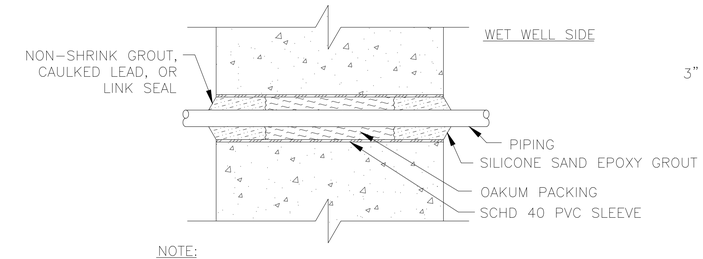

NOTE:
SLEEVED WET WELL PENETRATION IS NOT TO BE USED FOR CONDUIT INSTALLATION. SEE ELECTRICAL DETAIL SHEETS FOR CONDUIT PENETRATIONS.

SLEEVED WET WELL PENETRATION FOR PIPING 4"ø & SMALLER

DETAIL 6 C1M19

N.T.S.

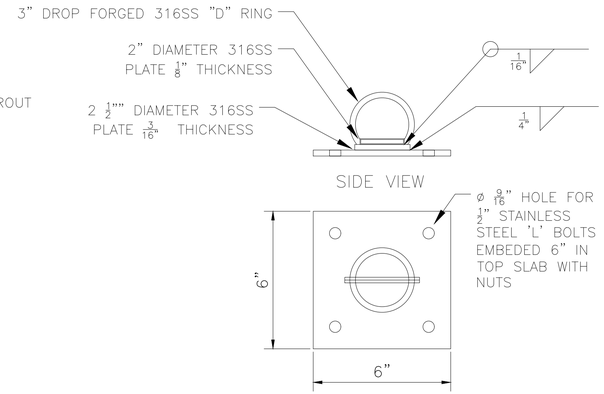

CB SERIES FALL PROTECTION CB-1B BOLT ANCHORED

DETAIL 1A

N.T.S.

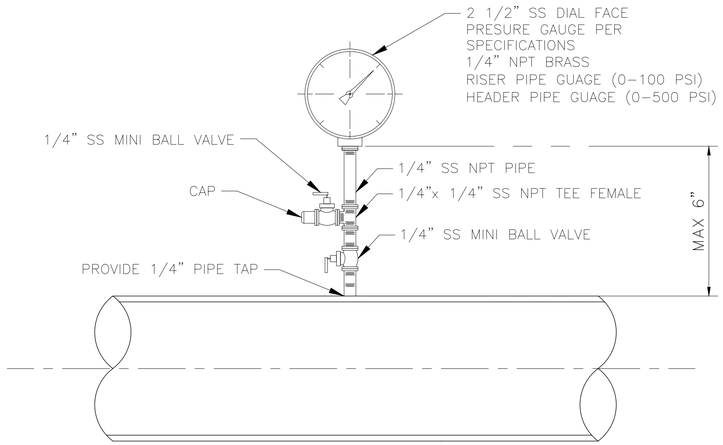

NOTE: ALL FITTINGS SHALL BE STAINLESS STEEL (316)

PRESSURE GAUGE DETAIL

DETAIL 15 C1M19

N.T.S.

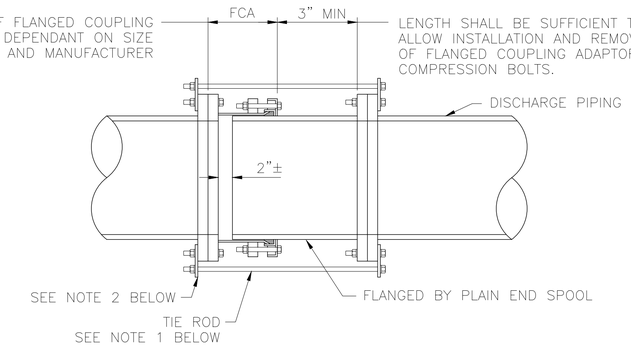

NOTES:

1. PROVIDE A NUMBER OF TIE RODS EQUAL TO 1/2 THE NUMBER OF FLANGE BOLTS. EVENLY SPACE INSTALLATION OF TIE RODS. DIAMETER OF TIE RODS TO BE EQUAL TO THE DIAMETER OF FLANGE BOLTS. LENGTH OF TIE RODS TO BE DETERMINED BY CONTRACTOR BASED ON SIZE AND MANUFACTURER OF FLANGED COUPLING ADAPTOR AND FINAL LENGTH OF SPOOL PIECE.
2. PROVIDE 316 SS TAB FOR ATTACHMENT OF TIE RODS. SIZE TO BE DETERMINED BY CONTRACTOR.
3. CONTRACTOR TO SUBMIT DETAILS DURING SHOP DRAWING SUBMISSION.
4. ALL HARDWARE SHALL BE 316 STAINLESS STEEL. TIE RODS SHOULD BE THREADED.
5. THIS RESTRAINT DOES NOT REPLACE THRUST BLOCKS TO BE PROVIDED AT OTHER LOCATIONS.

FLANGED COUPLING ADAPTOR RESTRAINT DETAIL

DETAIL 14 C1M19

N.T.S.

REVISION	DATE	APP

AMANI ENGINEERING, INC.
11011 RICHMOND AVENUE
SUITE 700
HOUSTON, TEXAS 77024
TEL: (713) 270-5700
TBPE REG. NO. F-4528
TBPELS REG. NO. 1028200

HATCH
750 TOWN & COUNTRY BLVD.
SUITE 650
HOUSTON, TEXAS 77024
P:832-930-7670
TX FIRM NUMBER: F-314

SURVEYED BY:
AMANI ENGINEERING,INC.
FB NO. P-6357

STATE OF TEXAS
DAVID L. BROWN
48282
REGISTERED
PROFESSIONAL ENGINEER
8/11/2026

CITY OF HOUSTON

HOUSTON PUBLIC WORKS

LIFT STATION RENEWAL & REPLACEMENT PROJECT

POST OAK #2 LIFT STATION
PROPOSED MECHANICAL DETAILS

WBS NUMBER	FOR CITY OF HOUSTON USE ONLY
R-000267-0173-4	HOUSTON PUBLIC WORKS ACCEPTED AND FILED 82825 CITY DRAWING NUMBER Approval Date 08/14/26 HOUSTON TX
DRAWING SCALE	
Scale N.T.S.	
CITY OF HOUSTON PM	
N.K. NUPUR KRISHNAN, PE	
SHEET NO. 65 OF 274	

C1M19

FILE NAME:
PLOTTED ON:

0 1 2 3 ORIGINAL SCALE IN INCHES FOR REDUCED PLANS

P:\Cordi\2024\24013 - Hatch - COH FY26 Lift Stations\CAD_DWG\Phase II\1-Phase II POST OAK #2\Phase II LS- POST OAK #2.dwg

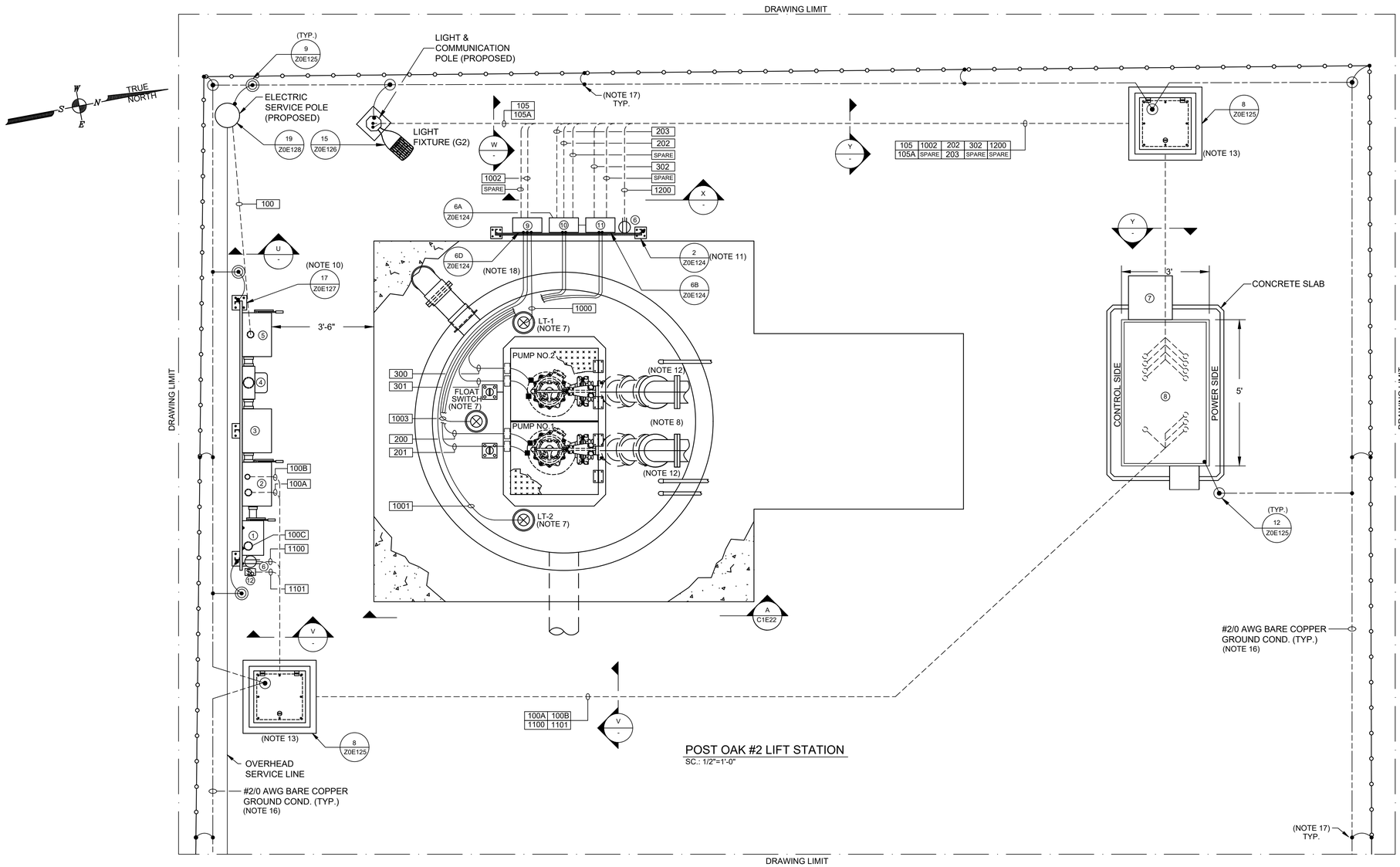

NOTES:

1. GROUNDING SHALL BE PER N.E.C. MINIMUM REQUIREMENTS.
2. THE ELECTRICAL INSTALLATION WITHIN THE WET WELL SHALL BE EXPLOSION PROOF IN ACCORDANCE WITH ARTICLE 510 OF THE NEC FOR CLASS I, DIVISION 1, GROUP C & D.
3. WHERE JUNCTION BOXES ARE SHOWN, THEY SHALL BE USED FOR PULLING OR TERMINATION PURPOSES ONLY. SPLICES WILL NOT BE ALLOWED EXCEPT AS PROVIDED BY NOTE 4 AND AT LIGHTING AND RECEPTACLE TERMINATIONS.
4. FOR MOTOR FEEDER AND CONTROL CABLES, INSTALL TYPE CSBE CABLE SEALING FITTING AT JUNCTION BOX ENTRANCE AND EXPLOSION PROOF SEAL IN CONDUITS TO CONTROL BUILDING OR PANEL.
5. TERMINATE PUMP POWER & CONTROL CONDUITS WITH CSBE SEAL. ATTACH STAINLESS STEEL SPLIT SLEEVE CABLE SUPPORT ON EACH POWER AND CONTROL CABLE.
6. ALL PUMP POWER AND CONTROL CABLE LEADS MUST BE THE SAME LENGTH REGARDLESS OF PUMP LOCATION FROM TERMINAL/JUNCTION BOX.
7. LEVEL TRANSMITTERS AND FLOAT SWITCH SHOWN IN APPROXIMATE LOCATION. ACTUAL LOCATION SHALL FIELD VERIFY.
8. INSIDE WET WELL IS CLASSIFIED AS CLASS I, DIVISION 1. OUTSIDE WET WELL WITHIN 5 FEET OF WET WELL OPENINGS ARE CLASSIFIED AS CLASS I, DIVISION 2.
9. NEW INSTRUMENT TO BE INSTALLED IN THE SAME AREA AS INSTRUMENT REMOVED.
10. THE ELECTRICAL SERVICE RACK MUST BE AT LEAST 5' WIDE.
11. THE JUNCTION BOX RACK MUST BE AT LEAST 6' WIDE.
12. FOR MECHANICAL PLAN VIEW, SEE DRAWING No. C1M14.
13. BELOW SURFACE CONDUIT RUNS SHALL HAVE TOTAL BENDS EQUAL TO OR LESS THAN 270 DEGREES. INSTALL HANDHOLES AT GRADE LEVEL WHERE NECESSARY.
14. GROUND FENCE USING #2/0 BARE COPPER CONDUCTOR AT FOUR CORNERS AND INTERMEDIATE POSTS AT INTERVALS NOT TO EXCEED 50 FEET.
15. PROVIDE FLEXIBLE BONDING JUMPERS ACROSS ALL GATE HINGES TO MAINTAIN CONTINUOUS GROUNDING.
16. GROUNDING LOOP SHALL BE BURIED 24" BELOW FINISHED GRADE.
17. EXOTHERMIC (THERMOWELD) CONNECTION OF #2/0 BARE COPPER GROUND CONDUCTOR TO REBAR.
18. CONDUIT WILL BE EMBEDDED IN THE TOP CONCRETE SLAB, NOT ON TOP OR BELOW THE SLAB.

NO.	DATE	REVISION	APP.

No.	DESCRIPTION
1	GENERATOR FUSED DISCONNECT
2	MANUAL TRANSFER SWITCH
3	SERVICE DISCONNECT SWITCH
4	UTILITY METER
5	METER DISCONNECT SWITCH
6	WEATHER PROOF GFI
7	PPU-AC PANEL
8	POWER & CONTROL CABINET
9	LEVEL TRANSMITTER J-BOX
10	PUMP NO.1 J-BOX
11	PUMP NO.2 J-BOX
12	LIGHTING SWITCH

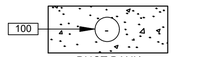

SECTION U
NTS.

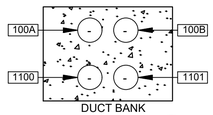

SECTION V
NTS.

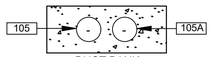

SECTION W
NTS.

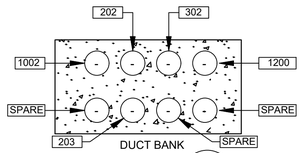

SECTION X
NTS.

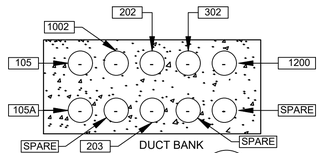

SECTION Y
NTS.

HATCH
750 TOWN & COUNTRY BLVD
SUITE 650
HOUSTON, TX 77024
P: 832-930-7670
TX FIRM NUMBER: F-314

SURVEYED BY:
AMANI ENGINEERING, INC.
FB NO. P-6357

STATE OF TEXAS
GUY N SEVERN
105809
LICENSED PROFESSIONAL ENGINEER
7/21/2026

CITY OF HOUSTON
HOUSTON PUBLIC WORKS

LIFT STATION RENEWAL & REPLACEMENT PROJECT
POST OAK #2

ELECTRICAL SITE PLAN

WBS NUMBER	FOR CITY OF HOUSTON USE ONLY
R-000267-0173-4	HOUSTON PUBLIC WORKS ACCEPTED AND FILED 82825 CITY DRAWING NUMBER Approval Date 08/14/26 HOUSTON TX
DRAWING SCALE	
AS NOTED	
CITY OF HOUSTON PM	
NUPUR KRISHNAN P.E. N.K.	
SHEET NO. 66 OF 274	

C1E21

PLOTTED: 8/11/2026 11:32 AM
PLOT STYLE: COH.ctb
FILE PATH: \\wusppplot01\d$\Global ProjectWise Plotting - WUS\Queue 5\queue5.dwg

PLOT STYLE: COH.ctb
PLOTTED: 8/11/2026 11:39 AM
FILE PATH: \\wusppplo101\d$\Global ProjectWise Plotting - WUS\Queue 1\queue1.dwg

NOTES:

1. GROUNDING SHALL BE PER N.E.C. MINIMUM REQUIREMENTS.
2. THE ELECTRICAL INSTALLATION WITHIN THE WET WELL SHALL BE EXPLOSION PROOF IN ACCORDANCE WITH ARTICLE 510 OF THE NEC FOR CLASS I, DIVISION I, GROUP C & D.
3. ALL PUMP POWER AND CONTROL CABLE LEADS MUST BE THE SAME LENGTH REGARDLESS OF PUMP LOCATION FROM TERMINAL/JUNCTION BOX.
4. FOR MOTOR FEEDER AND CONTROL CABLES. INSTALL TYPE CSBE CABLE SEALING FITTING AT JUNCTION BOX ENTRANCE AND EXPLOSION PROOF SEAL IN CONDUITS TO POWER & CONTROL PANEL.
5. TERMINATE PUMP POWER & CONTROL CONDUITS WITH CSBE SEAL. ATTACH STAINLESS STEEL SPLIT SLEEVE CABLE SUPPORT ON EACH POWER AND CONTROL CABLE.
6. INSTRUMENTS SHOWN IN APPROXIMATE LOCATION. ACTUAL LOCATION SHALL BE ESTABLISHED DURING CONSTRUTION.

NO.	DATE	REVISION	APP.

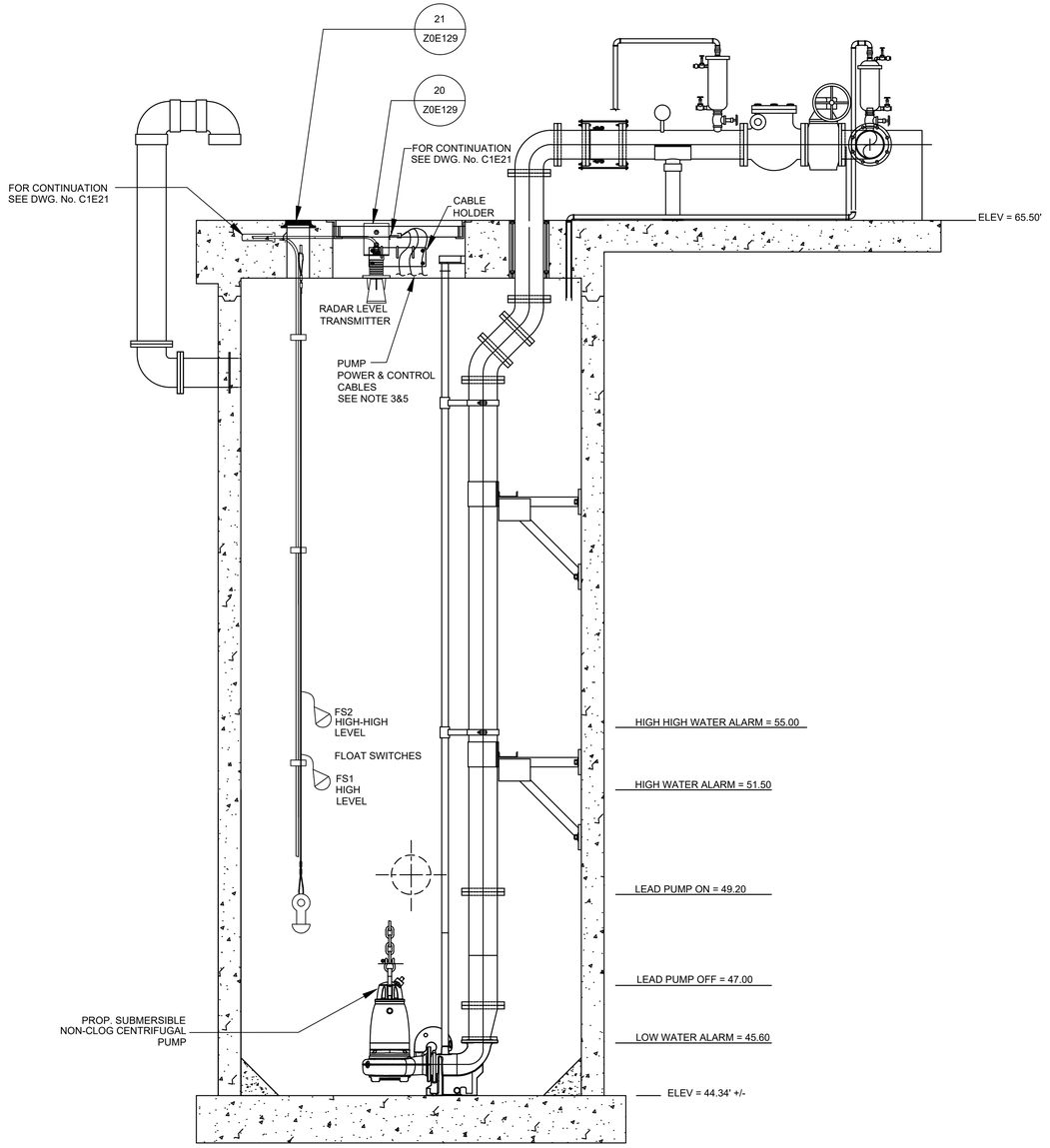

POST OAK #2 - LIFT STATION

A / - ELEVATION

SC.: 1/2"=1'-0"

HATCH
750 TOWN & COUNTRY BLVD
SUITE 650
HOUSTON, TX 77024
P: 832-930-7670
TX FIRM NUMBER: F-314

SURVEYED BY:
AMANI ENGINEERING, INC.
FB NO. P-6357

STATE OF TEXAS
GUY N SEVERN
105809
LICENSED
PROFESSIONAL ENGINEER
7/21/2026

CITY OF HOUSTON

HOUSTON PUBLIC WORKS

LIFT STATION RENEWAL & REPLACEMENT PROJECT

POST OAK #2

LIFT STATION ELEVATION

WBS NUMBER
R-000267-0173-4
DRAWING SCALE
AS NOTED
CITY OF HOUSTON PM
NUPUR KRISHNAN P.E. N.K.

FOR CITY OF HOUSTON USE ONLY

HOUSTON
PUBLIC WORKS
ACCEPTED AND FILED
82825
CITY DRAWING NUMBER
Approval Date 08/14/26
HOUSTON TX

NOTES:

1. FOR CONDUIT SCHEDULE SEE DRAWING NO. C1E39.
2. FOR NAME PLATE SCHEDULE SEE DRAWING NO. C1E25.
3. FOR POWER & CONTROL PANEL DETAIL SEE DRAWING NO. C1E24.

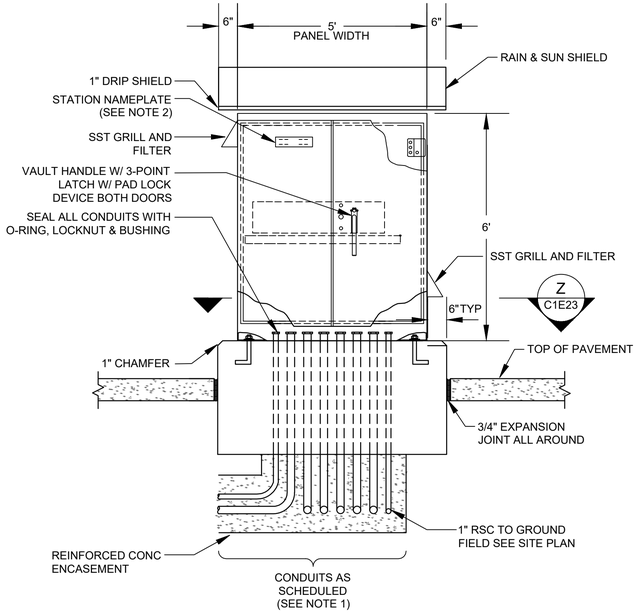

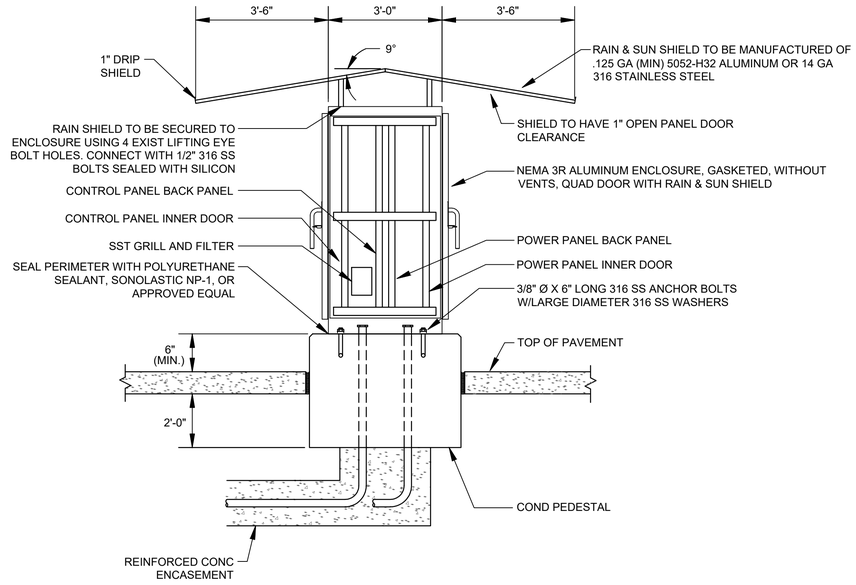

POWER & CONTROL CABINET ENCLOSURE WITH CONCRETE PEDESTAL FOUNDATION

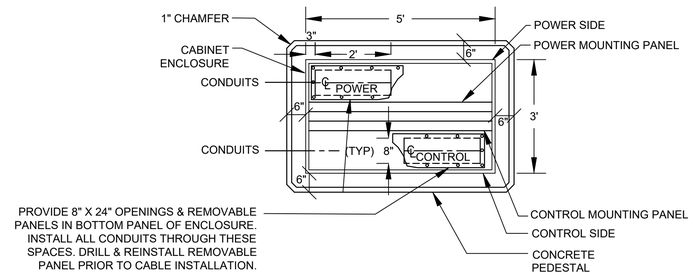

SECTION Z / C1E23
NTS

NO.	DATE	REVISION	APP.

HATCH
750 TOWN & COUNTRY BLVD
SUITE 650
HOUSTON, TX 77024
P: 832-930-7670
TX FIRM NUMBER: F-314

SURVEYED BY:
AMANI ENGINEERING, INC.
FB NO. PP–6357

STATE OF TEXAS
GUY N SEVERN
105809
LICENSED
PROFESSIONAL ENGINEER
7/21/2026

CITY OF HOUSTON
HOUSTON PUBLIC WORKS

LIFT STATION RENEWAL & REPLACEMENT PROJECT
POST OAK #2
POWER & CONTROL CABINET INSTALLATION

WBS NUMBER	FOR CITY OF HOUSTON USE ONLY
R-000267-0173-4	HOUSTON PUBLIC WORKS ACCEPTED AND FILED 82825 CITY DRAWING NUMBER Approval Date 08/14/26 HOUSTON TX
DRAWING SCALE	
AS NOTED	
CITY OF HOUSTON PM	
NUPUR KRISHNAN P.E. N.K.	
SHEET NO. 68 OF 274	

C1E23

PLOTTED: 8/11/2026 11:42 AM
PLOT STYLE: COH.ctb
FILE PATH: \\uspppiot011d$\Global ProjectWise Plotting - WUS\Queue 3\queue3.dwg

EQUIPMENT AND DEVICE SCHEDULE

ITEM	QTY.	DESCRIPTION
A	1	PANEL BOARD, 120/240V, 2 PHASE, 3 WIRE, 100A, 24 CKTS, SQUARE D MODEL # QP24100CP 21HX, 14.25W
B	2	NEMA MOTOR STARTER, TYPE S, NONREVERSING, SIZE 2, 45A, 25HP, AT 460VAC, 3 POLE, SOLID STATE, 120VAC COIL, SCHNEIDER MODEL 8536SDO1V02H30SX11
C	2	TIME DELAY RELAY WITH THREE FORM C CONTACTS, 24VDC COIL AND 11 PIN SOCKET BASE.TURCK RELECO MODEL CT3-E30/L WITH S3-S BASE C3-A30X/24DC
D	1	SINGLE CHANNEL INTRINSICALLY SAFE RELAY, ATC MODEL ISO-120-AFA
E	1	PROGRAMMING SCREEN (OIT), SIEMENS INDUSTRY TP900 - COMFORT TOUCH PANEL
F	2	HAND-OFF-AUTO SWITCH, 3 POSITION, HEAVY-DUTY, OILTIGHT WITH 2 SETS OF CONTACT BLOCKS (PUMP CONTROL), ALLEN-BRADLEY MODEL 800H-JR2B
G	2	INDICATING LIGHT, HEAVY DUTY, OILTIGHT, RED, 24 VDC, LED, WITH "RUN" LEGEND, ALLEN-BRADLEY MODEL 800H-QRTH2R
H	6	TERMINAL RAIL, STEEL GALVANIC ZINC, W: 2000 mm, H: 15 mm, D: 5.5 mm, WEIDMULLER ITEM No.0117510000
I	1	PUMP ALARM RESET PUSHBUTTON, ALLEN-BRADLEY MODEL 800H-AR2BF
J	2	SWITCH FOR CABINET LIGHT, 120V, 20A, SPST, HUBBELL MODEL HBL12211, WITH METALLIC BOX 4"x4" AND STEEL METALLIC SQUARE BOX COVER DUPLEX
K	2	DUPLEX RECEPTACLE, 120V, 20A, 2 WIRE, GROUNDED, HUBBELL MODEL HBL53621, WITH METALLIC BOX 4"x4" AND STEEL METALLIC SQUARE BOX SWITCH COVER.
L	2	24" LED STRIP LIGHT 120V SUITABLE FOR ZERO DEGREE OPERATION, HOFFMAN MODEL LF120V28
M	1	480VAC, 3 PHASES SURGE PROTECTOR - SURGE SUPPRESION INC MODEL SDLA3Y2
N	30	TAG CARRIER, SCHT 5 WEIDMULLER, CATALOG NO. 0292460000
P	2	CURRENT TRANSFORMER, RATIO AS SCHEDULED W/4-20mA OUTPUT, PHOENIX CONTACT MODEL MCR-SL-CUC-100-I
Q	8	TERMINAL BLOCKS, SIZED FOR MOTOR POWER REQUIREMENTS, WEIDMULLER WDU 10
R	16	WIRE DUCT 2" WIDE X 3" DEEP MINIMUM, LENGTH 6', HELLERMANN TYTON MODEL SL2X3W4
S	20	END BRACKET, WEW 35/2 WEIDMULLER, CATALOG NO. 1061200000
T	48	NAMEPLATES, (SEE NAMEPLATE SCHEDULE & EQUIPMENT LAYOUT DRAWINGS)
U	3	ANALOG INPUT MODULE, 4 ANALOG INPUT , SIEMENS MODEL SIMATIC S7-1200, 6ES7231-4HD32-0XB0
V	6	FUSE HOLDER & FUSES - PHASE FAILURE FERRAZ SHAWMUT, PN 30313
W	1	72"x60"x36" NEMA 3R ENCLOSURE, GASKETED, WITHOUT VENTS INCLUDING QUAD DOORS, BACKPLANES, & RAIN-SUN SHIELD MANUFACTURED OF .125 5052-H32 ALUMINUM - NEMA ENCLOSURES MFG. CORP. NE726036-12FSDDA WITH 2ea. NEAF7260P & 4 ea. NE7230SWP
X	1	DOOR MOUNTED ROTARY HANDLE DISCONNECT SWITCH (SUITABLE ENVIROMENT), SQUARE D MODEL 9421LZ250H43
Y	1	MAIN CIRCUIT BREAKER, POWER PACT H, 100A 3-POLE, 600VAC, THERMAL MAGNETIC, SQUARE D, MODEL HJL36100T
Z	2	MOTOR CIRCUIT BREAKER, POWER PACT H, 60A, 3 POLE, 600VAC, THERMAL MAGNETIC, SQUARE D, MODEL HGL36060T
AA	160	TERMINAL BLOCKS, WEIDMULLER WDU 2.5, CATALOG NO. 1020000000
BB	2	EXTERNAL OVERLOAD RESET PUSHBUTTON MECHANISM, SQUARE D MODEL 9066 RA1
CC	2	ANALOG I/O SURGE SUPPRESSOR EATON MODEL IOP32D
DD	1	DIGITAL INPUT MODULE, 16 DIGITAL INPUT 24 VDC , SIEMENS MODEL SIMATIC S7-1200, 6ES7221-1BH32-0XB0
EE	1	CIRCUIT BRAKER POWERPACT H, 30A, 2 POLE, 600VAC, THERMAL MAGNETIC, SQUARE D, MODEL HJL36030
FF	1	GROUND BUS, SQUARE D MODEL 1630 PK9GTA
GG	1	LED LIGHT FOR INDOOR/OUTDOOR USE, 24 VDC, COLOR RED, FEDERAL SIGNAL MODEL LP3PL-024R.
HH	1	10 KVA, 480 - 240/120V,1ϕ, 3W DRY TYPE NEMA 3R ENCLOSURE TRANSFORMER
II	1	120VAC - 24VAC POWER SUPPLY (AS REQUIRED), SQUARE D MODEL 9070T200D13
JJ	12	CARTRIDGE FUSES & FUSE HOLDER, FERRAZ SHAWMUT, PN 30313
KK	8	QUARTER TURN CAPTIVE DOOR CLOSURE
LL	1	120VAC - 24VDC PLC POWER SUPPLY 5A, PHOENIX CONTACT MODEL QUINT-PS/1AC/24DC/5
MM	2	MOTION SWITCH, CHERRY MODEL E13-00H
NN	*	NOT USED
PP	2	INDICATING LED LIGHT, HEAVY DUTY, OILTIGHT, GREEN, 24 VDC, LED WITH " PRIMARY PLC" & "BACKUP, PLC" LEGEND, ALLEN-BRADLEY MODEL 800H-QRTH2G
QQ	15	CONTROL RELAY, 3 POLE, 24VDC CONTROL COIL - TURCK C3-A30X/24DC W/S3-S BASE
RR	2	CONTROL RELAY, 3 POLE, 120VAC CONTROL COIL - TURCK C3-A30X/120AC W/S3-S BASE
SS	1	COMMUNICATION ETHERNET SWITCH, SIEMENS MODEL SCALANCE X310FE
TT	1	120VAC SURGE SURGE PROTECTOR WITH ALARM CONTACT - SURGE SUPPRESSION INC MODEL SDLA1P1
UU	2	PROGRAMMABLE LOGIC CONTROLLER WITH EXPANSION UNIT, SIEMENS MODEL 6ES7214-1HG40-0XB0, 14DI, 8DO, 2AI.
VV	1	PHASE AND UNDER VOLTAGE MONITOR, DIVERSIFIED ELECTRONICS MODEL PDB-480-ALE
WW	115	FUSED TERMINAL BLOCKS, WEIDMULLER WSI 6, CATALOG NO. 1011000000
XX	2	PUMP PROTECTION MODULE RATED FOR CLASS I, DIVISION I, MINICAS II 83 58 57 24VDC/AC
YY	2	ANALOG SIGNAL ISOLATOR, TURCK MODEL IMS-AI-DLI-22-DLI/L
ZZ	1	1-GANG WEATHERPROOF-IN-USE COVER, TAYMAC, MODEL MM420C.
AB	1	TAMPER/WEATHER RESISTANT GFCI RECEPTACLE, LEVITON, MODEL GFWT1-W.
AC	1	POWER DISTRIBUTION BLOCK, 3 POLE, EDISON MODEL HPB106-3
AD	1	1-GANG WEATHERPROOF BOX, 3-1/2", 2" DEPTH, ALUMINUM DIE CAST, BELL, MODEL 5320-0.
AE	1	6" EXHAUST FAN, 120V, STAINLESS FILTERS & GRILL PACKAGE W/BUG GUARD, HOFFMAN MODEL TFP6
AF	1	T-STAT FOR EXHAUST FAN, HOFFMAN, MODEL ATEMNOF

* - AS SCHEDULED

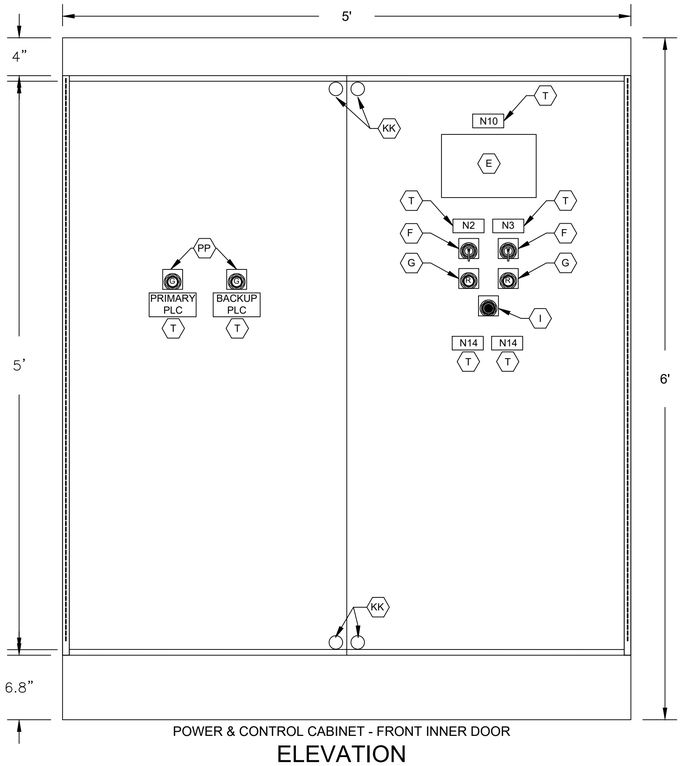

POWER & CONTROL CABINET - FRONT INNER DOOR

ELEVATION

SC.: 1-1/2"=1'-0"

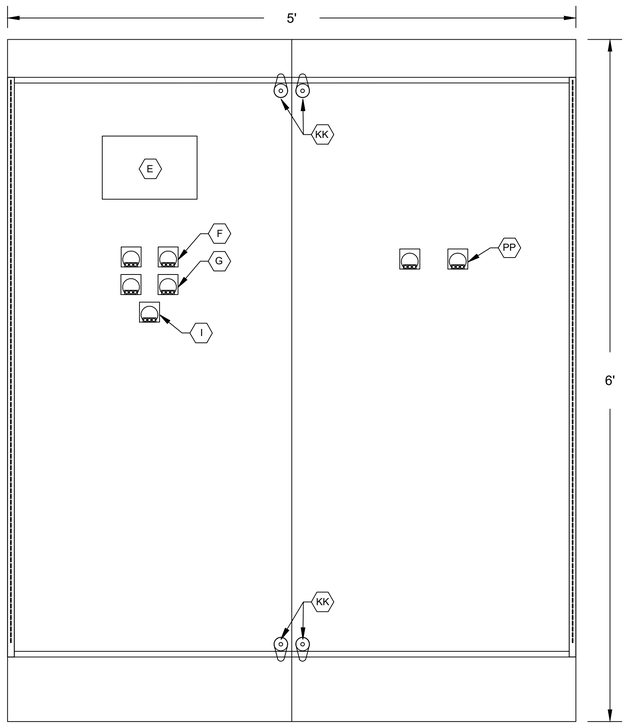

POWER & CONTROL CABINET - BACK INNER DOOR

ELEVATION

SC.: 1-1/2"=1'-0"

NOTES:

1. NAMEPLATES SHALL BE MOUNTED TO PANELS USING STAINLESS STEEL HARDWARE.
2. REFER SPECIFICATIONS FOR ALL PANEL COMPONENTS.

NO.	DATE	REVISION	APP.

HATCH
750 TOWN & COUNTRY BLVD
SUITE 650
HOUSTON, TX 77024
P: 832-930-7670
TX FIRM NUMBER: F-314

SURVEYED BY:
AMANI ENGINEERING, INC.
FB NO. P-6357

STATE OF TEXAS
GUY N SEVERN
105809
LICENSED
PROFESSIONAL ENGINEER
7/21/2026

CITY OF HOUSTON

HOUSTON PUBLIC WORKS

LIFT STATION RENEWAL & REPLACEMENT PROJECT
POST OAK #2

POWER & CONTROL CABINET EQUIPMENT LAYOUT AND SCHEDULE

WBS NUMBER
R-000267-0173-4
DRAWING SCALE
AS NOTED
CITY OF HOUSTON PM
NUPUR KRISHNAN P.E. N.K.
SHEET NO. 69 OF 274

FOR CITY OF HOUSTON USE ONLY

HOUSTON PUBLIC WORKS
ACCEPTED AND FILED
82825
CITY DRAWING NUMBER
Approval Date 08/14/26
HOUSTON TX

C1E24

PLOTTED: 8/11/2026 11:42 AM
PLOT STYLE: COH.ctb
FILE PATH: \\wusppplot01\d$\Global ProjectWise Plotting - WUS\Queue 1\queue1.dwg

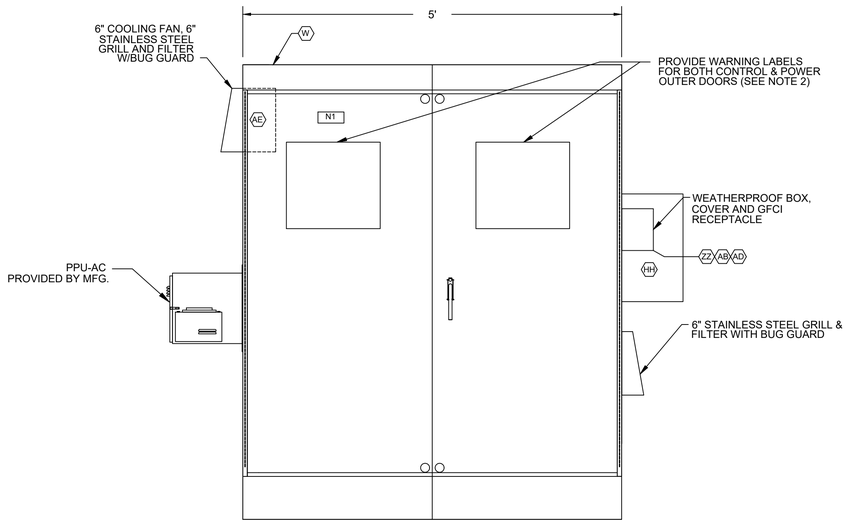

POWER & CONTROL CABINET (CONTROL SIDE)
OUTER DOOR

ELEVATION

SC.: 1"=1'-0"

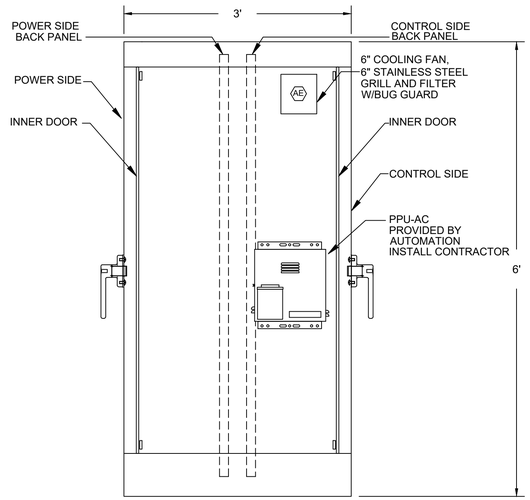

POWER & CONTROL CABINET
(LEFT SIDE VIEW)

ELEVATION

SC.: 1"=1'-0"

NAMEPLATE SCHEDULE

DESIGNATION	ENGRAVED
N1	POST OAK #2 PUMP STATION
N2	PUMP NO. 1
N3	PUMP NO. 2
N4	NOT USED.
N5	NOT USED.
N6	NOT USED.
N7	NOT USED.
N8	NOT USED.
N9	NOT USED.
N10	PROGRAMMING SCREEN
N11	NOT USED.
N12	PRIMARY PLC
N13	BACKUP PLC
N14	MOTOR DATA HORSEPOWER (OUTPUT) ---------- 20 RPM AT FULL LOAD ---------- 1760 MAX START PER HOUR ---------- 30 FREQUENCY ---------- 60 NUMBER OF PHASES ---------- 3 MODEL NUMBER ---------- RATED VOLTAGE ---------- 480 Vac SERVICE FACTOR ----------0.79 FULL LOAD AMPS ---------- 26 A INSULATION CLAS ---------- H NEMA DESIGN LETTER ---------- TEMPERATURE RISE ---------- NEMA FRAME SIZE ---------- DATE OF MANUFACTURE ---------- THERMO PROTECTION ---------- MOISTURE PROTECTION ----------
N15	EXTERNAL OVERLOAD RESET PUSH BUTTON MECHANISM
N16	MAIN BREAKER

NOTES:

1. SEE SHEET C1E24 FOR EQUIPMENT AND DEVICE SCHEDULE.
2. FOR ARC FLASH HAZARD WARNNG AND LABEL REQUIREMENTS REFER TO NEC SECTIONS 110.16 & 110.21

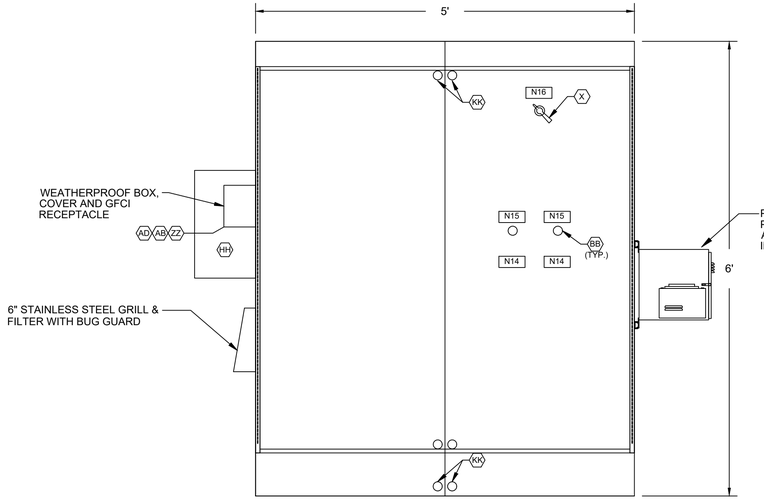

POWER & CONTROL CABINET (POWER SIDE)
INNER DOOR

ELEVATION

SC.: 1"=1'-0"
(SEE NOTE 1)

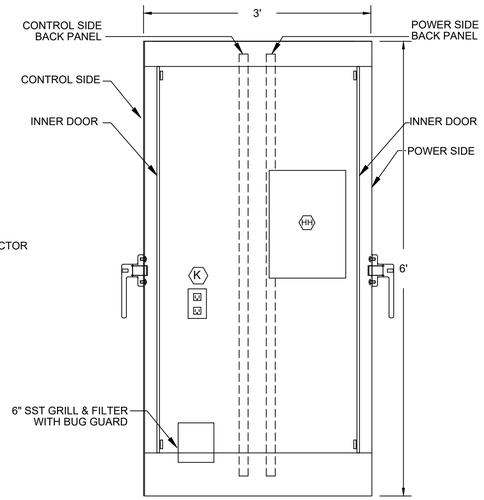

POWER & CONTROL CABINET
(RIGHT SIDE VIEW)

ELEVATION

SC.: 1"=1'-0"

NO.	DATE	REVISION	APP.

HATCH
750 TOWN & COUNTRY BLVD
SUITE 650
HOUSTON, TX 77024
P: 832-930-7670
TX FIRM NUMBER: F-314

SURVEYED BY:
AMANI ENGINEERING, INC.
FB NO. P-6357

STATE OF TEXAS
GUY N SEVERN
105809
LICENSED
PROFESSIONAL ENGINEER
7/21/2026

CITY OF HOUSTON
HOUSTON PUBLIC WORKS

LIFT STATION RENEWAL & REPLACEMENT PROJECT
POST OAK #2

POWER & CONTROL CABINET EQUIPMENT LAYOUT-I

WBS NUMBER
R-000267-0173-4
DRAWING SCALE
AS NOTED
CITY OF HOUSTON PM
NUPUR KRISHNAN P.E. N.K.
SHEET NO. 70 OF 274

FOR CITY OF HOUSTON USE ONLY

HOUSTON PUBLIC WORKS
ACCEPTED AND FILED
82825
CITY DRAWING NUMBER
Approval Date 08/14/26
HOUSTON TX

C1E25

PLOTTED: 8/11/2026 11:41 AM
PLOT STYLE: COH.ctb
FILE PATH: \\wusppplot01\d$\Global ProjectWise Plotting - WUS\Queue 5\queue5.dwg

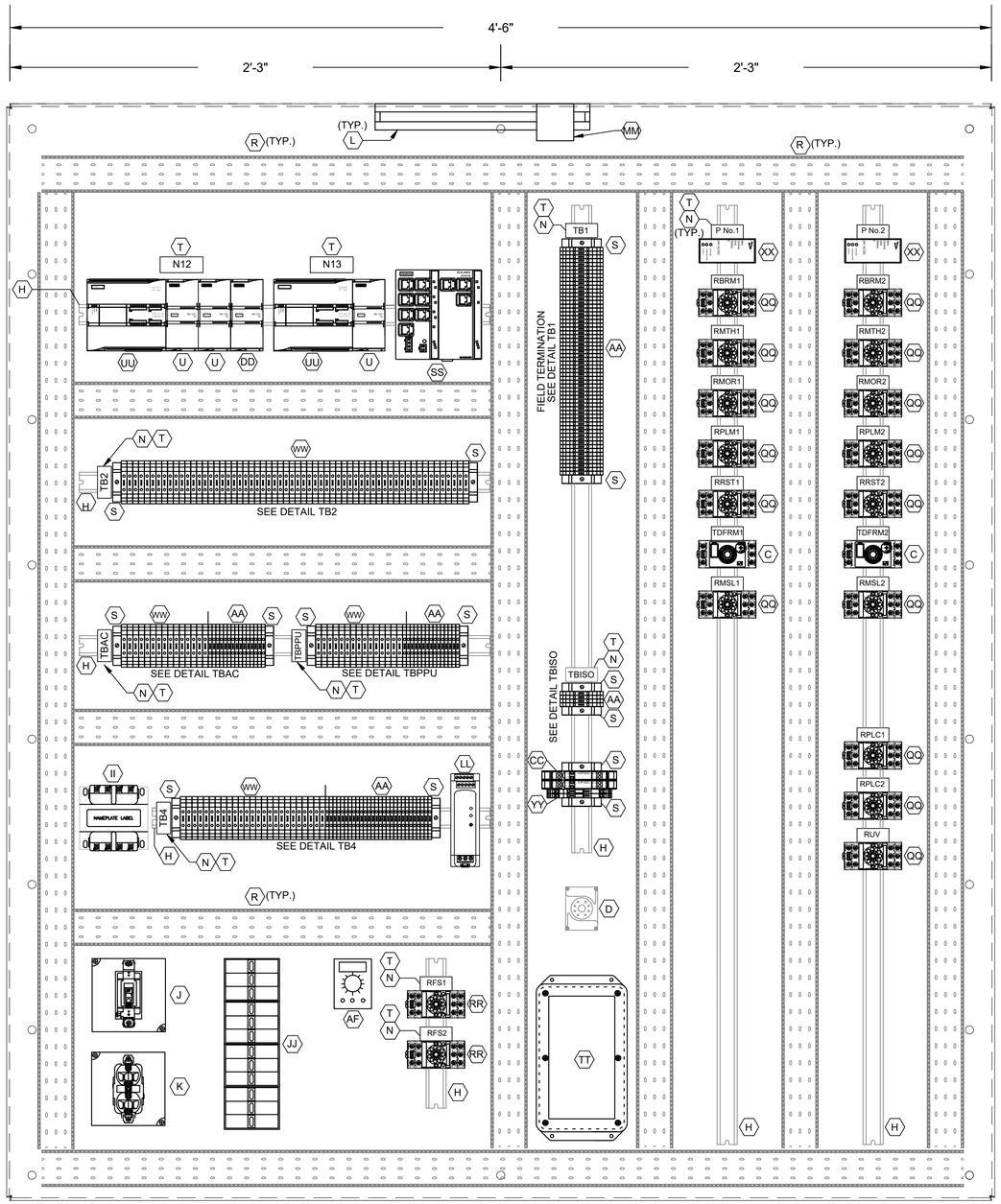

CONTROL PANEL ELEVATION

SC.: 3"=1'-0"

DETAIL TB1
L1A
L1N
SPARE
3A
3B
SPARE
49
50
51
52
53
54
1004
1
24V-
24V-
1002
2
11
1001
1001A
12
1003
1003A
1002
1004
18
3N
SPARE
36
36N
41
42
43
44
SPARE
L1A
L1N
103
104
105
106
107
108
110
113
115
116
119
SPARE
203
204
205
206
207
208
210
213
215
216
219

ALL L AND N FOR EACH PUMP CONTROL TO BE FUSED

DETAIL TB2
36A
37A
50
52
54
52A
54A
L+
M
35B
38B
41B
47B
13B
13AB
13GB
L+
M
14B
14AB
14GB
L+
M
13
13A
13G
14
14A
14G
17
18
18B
28
29
32
35B
33
42
44
SPARE
103
104
115
109
110
118
120
121
122
123
SPARE
209
210
211
218
220
222
223
SPARE
SPARE
SPARE

DETAIL TBAC
L1
L2
L3
L4
L5
L6
L7
L8
L9
L10
L11
N1
N2
N3
N4
N5
N6
N7
N8
N9
N10
N11
N12
N13
N14
N15

DETAIL TBPPU
L1
L2
L3
L4
L5
L6
L7
L8
L9
L10
L11
L12
L13
L14
L15
N1
N2
N3
N4
N5
N6
N7
N8
N9
N10
N11
N12
N13
N14
N15

DETAIL TB4
1
2
3
4
5
6
7
8
9
10
11
12
13
14
15
16
17
18
19
20
21
22
23
24
25
N1
N2
N3
N4
N5
N6
N7
N8
N9
N10
N11
N12
N13
N14
N15
N16
N17
N18
N19
N20
N21
N22
N23
N24
N25

DETAIL TB-ISO
1500
1501
1503
1504

LEGEND

TAG	DESCRIPTION
RMTH	MOTOR HIGH TEMPERATURE ALARM RELAY
RPLM	PLC PUMP RUN RELAY
RRST	PUMP RESET AUX RELAY
RPLC	PLC MODE AUX RELAY
RMOR	MOTOR OVERLOAD ALARM RELAY
RBRM	BACKUP SYSTEM RUN RELAY
RUV	UNDER VOLTAGE RELAY
ISO	INTRINSICALLY SAFE RELAY
RFS	PUMP RUN FLOAT SWITCH RELAY
TDFRM	TIMER FLOAT SWITCH RUN RELAY
RMSL	MOTOR SEAL LEAK ALARM RELAY

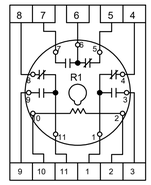

RELAY DETAIL ITEM RR

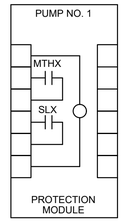

PUMP PROTECTION MODULE DETAIL, ITEM XX

NOTES:

1. SEE SHEET C1E24 FOR EQUIPMENT AND DEVICE SCHEDULE.

NO.	DATE	REVISION	APP.

HATCH
750 TOWN & COUNTRY BLVD
SUITE 650
HOUSTON, TX 77024
P: 832-930-7670
TX FIRM NUMBER: F-314

SURVEYED BY:
AMANI ENGINEERING, INC.
FB NO. P-6357

STATE OF TEXAS
GUY N SEVERN
105809
LICENSED
PROFESSIONAL ENGINEER
7/21/2026

CITY OF HOUSTON
HOUSTON PUBLIC WORKS

LIFT STATION RENEWAL & REPLACEMENT PROJECT
POST OAK #2

POWER & CONTROL CABINET EQUIPMENT LAYOUT-II

WBS NUMBER
R-000267-0173-4
DRAWING SCALE
AS NOTED
CITY OF HOUSTON PM
NUPUR KRISHNAN P.E. N.K.

FOR CITY OF HOUSTON USE ONLY

HOUSTON PUBLIC WORKS
ACCEPTED AND FILED
82825
CITY DRAWING NUMBER
Approval Date 08/14/26
HOUSTON TX

C1E26

SHEET NO. 71 OF 274

PLOTTED: 8/11/2026 11:33 AM

PLOT STYLE: COH.ctb

FILE PATH: \\wusppplot01\d$\Global ProjectWise Plotting - WUS\Queue 1\queue1.dwg

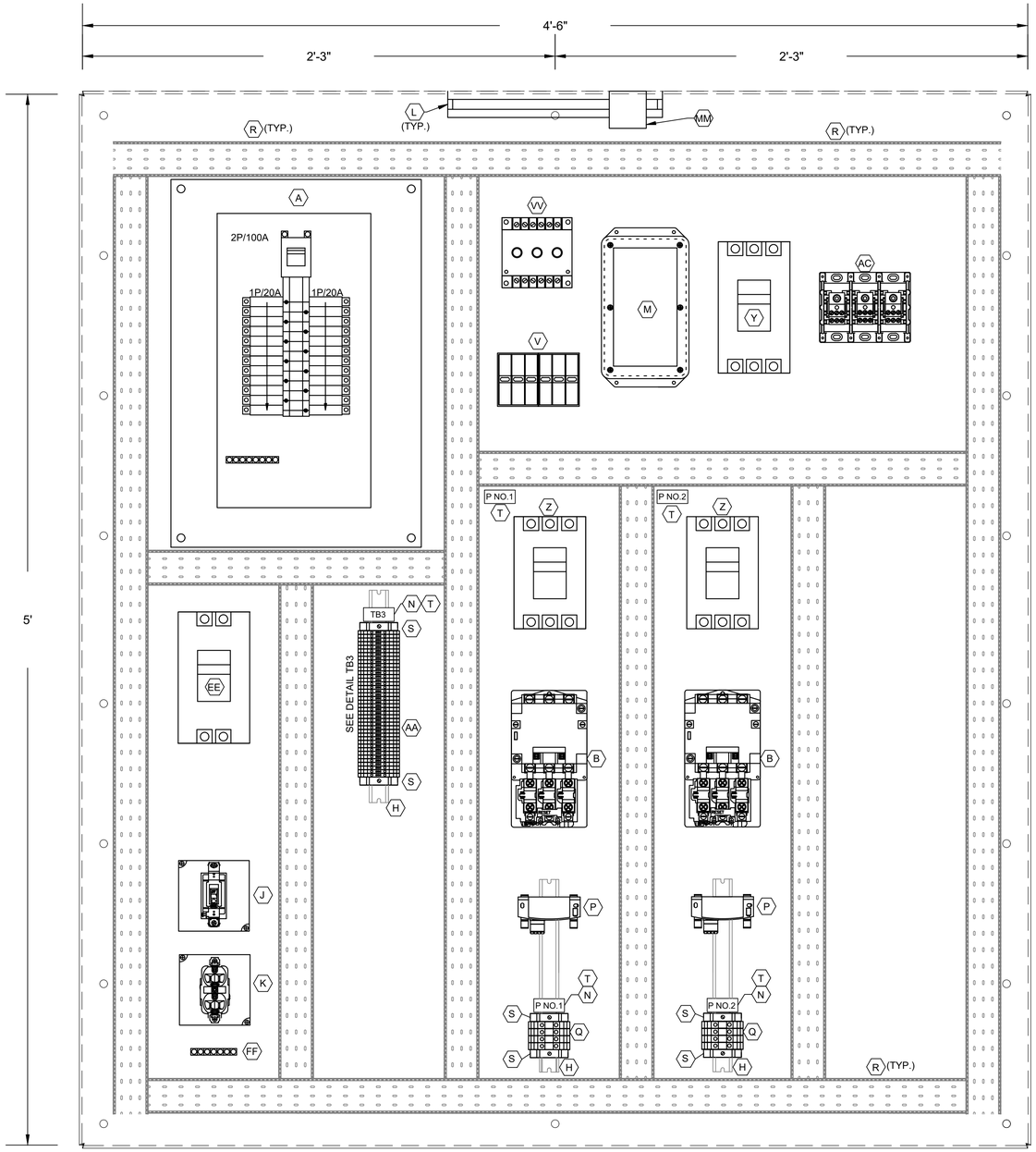

POWER PANEL ELEVATION

SC.: 3"=1'-0"

3
18
L1A
L1N
SPARE
SPARE
103
104
105
106
107
108
110
113
115
116
119
SPARE
203
204
205
206
207
208
210
213
215
216
219
SPARE
SPARE
SPARE
SPARE
SPARE
SPARE
SPARE
SPARE
SPARE
3A
3B

DETAIL TB3

NO.	DATE	REVISION	APP.

NOTES:

1. SEE SHEET C1E24 FOR EQUIPMENT AND DEVICE SCHEDULE.

HATCH
750 TOWN & COUNTRY BLVD
SUITE 650
HOUSTON, TX 77024
P: 832-930-7670
TX FIRM NUMBER: F-314

SURVEYED BY:
AMANI ENGINEERING, INC.
FB NO. P-6357

STATE OF TEXAS
GUY N SEVERN
105809
LICENSED PROFESSIONAL ENGINEER
7/21/2026

CITY OF HOUSTON

HOUSTON PUBLIC WORKS

LIFT STATION RENEWAL & REPLACEMENT PROJECT

POST OAK #2

POWER & CONTROL CABINET EQUIPMENT LAYOUT-III

WBS NUMBER
R-000267-0173-4
DRAWING SCALE
NTS
CITY OF HOUSTON PM
NUPUR KRISHNAN P.E. N.K.

FOR CITY OF HOUSTON USE ONLY

HOUSTON PUBLIC WORKS
ACCEPTED AND FILED
82825
CITY DRAWING NUMBER
Approval Date 08/14/26
HOUSTON TX

PLOTTED: 8/11/2026 11:33 AM
PLOT STYLE: COH.ctb
FILE PATH: \\wuspplot01\d$\Global ProjectWise Plotting - WUS\Queue 2\queue2.dwg

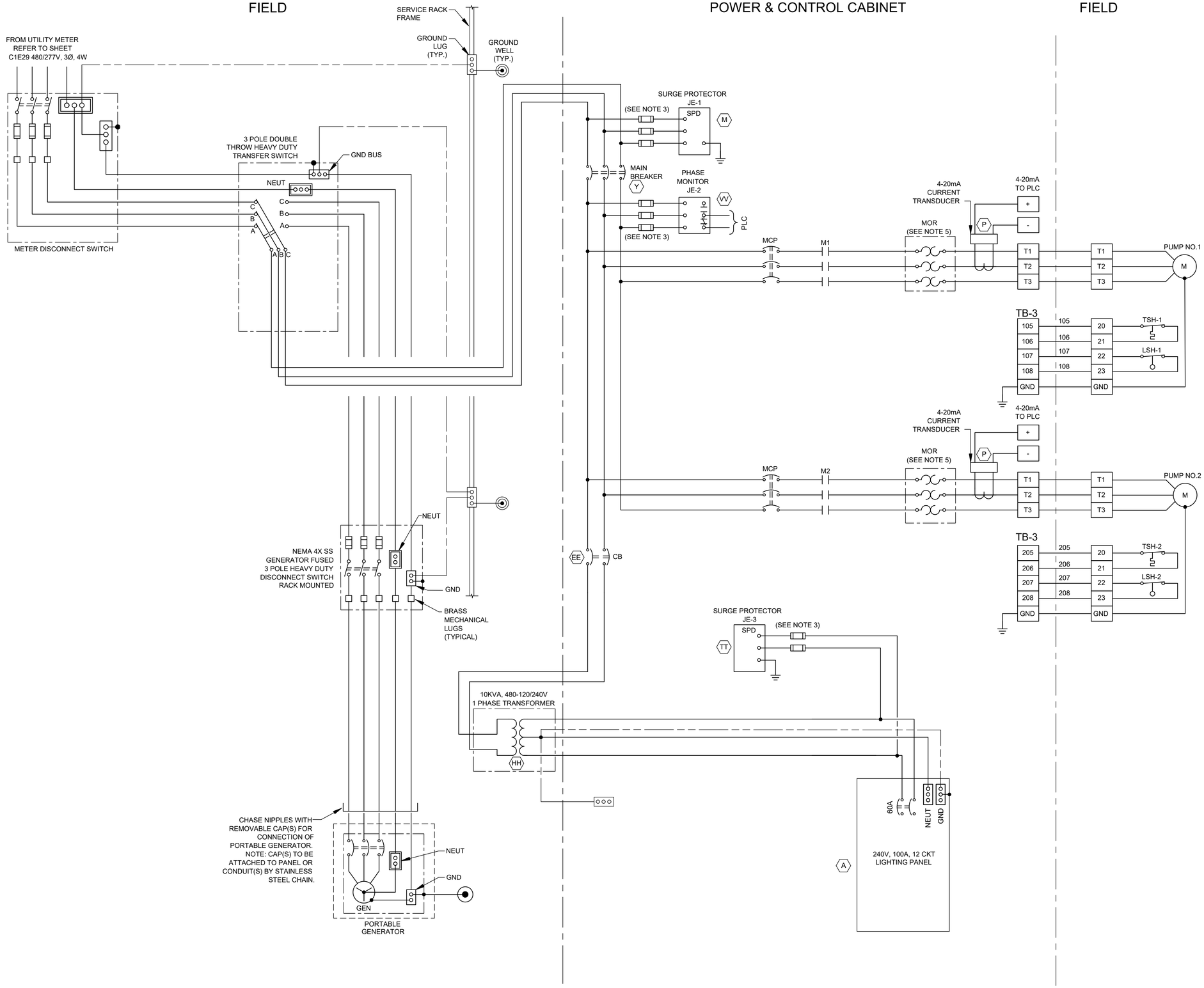

NOTES:

1. UNLESS OTHERWISE INDICATE, ALL DEVICES WITHOUT FURTHER DESIGNATION ARE LOCATED AT THE POWER & CONTROL CABINET.
2. SEE SHEET C1E24 FOR EQUIPMENT AND DEVICE SCHEDULE.
3. PROVIDE FUSE SIZE ACCORDING TO MANUFACTURER'S REQUIREMENTS.
4. CONTRACTOR SHALL TERMINATE POWER & CONTROL WIRES PER MANUFACTURER'S REQUIREMENTS.
5. MOTOR OVERLOAD RELAY.

LEGEND

- △ DEVICE OR FIELD TERMINAL LOCATED AT MOTOR
- * DEVICE OR FIELD TERMINAL LOCATED REMOTE
- □ DEVICE OR FIELD TERMINAL LOCATED AT POWER PANEL
- ■ FIELD TERMINAL LOCATED AT CONTROL PANEL
- ▲ REMOTE TERMINAL
- ● DEVICE TERMINAL NO.
- ◆ PC INTERFACE TERMINAL

NO.	DATE	REVISION	APP.

HATCH
750 TOWN & COUNTRY BLVD
SUITE 650
HOUSTON, TX 77024
P: 832-930-7670
TX FIRM NUMBER: F-314

SURVEYED BY:
AMANI ENGINEERING, INC.
FB NO. P-6357

STATE OF TEXAS
GUY N SEVERN
105809
LICENSED PROFESSIONAL ENGINEER
7/21/2026

CITY OF HOUSTON
HOUSTON PUBLIC WORKS

LIFT STATION RENEWAL & REPLACEMENT PROJECT
POST OAK #2

THREE LINE DIAGRAM

WBS NUMBER
R-000267-0173-4
DRAWING SCALE
NTS
CITY OF HOUSTON PM
NUPUR KRISHNAN P.E. N.K.

FOR CITY OF HOUSTON USE ONLY

HOUSTON PUBLIC WORKS
ACCEPTED AND FILED
82825
CITY DRAWING NUMBER
Approval Date 08/14/26
HOUSTON TX

C1E28

SHEET NO. 73 OF 274

PLOTTED: 8/11/2026 11:32 AM

PLOT STYLE: COH.ctb

FILE PATH: \\wusppplot01\d$\Global ProjectWise Plotting - WUS\Queue 4\queue4.dwg

PLOTTED: 8/11/2026 11:32 AM
PLOT STYLE: COH.ctb
FILE PATH: \\wuspplot01\d$\Global ProjectWise Plotting - WUS\Queue 3\queue3.dwg

POWER & CONTROL CABINET

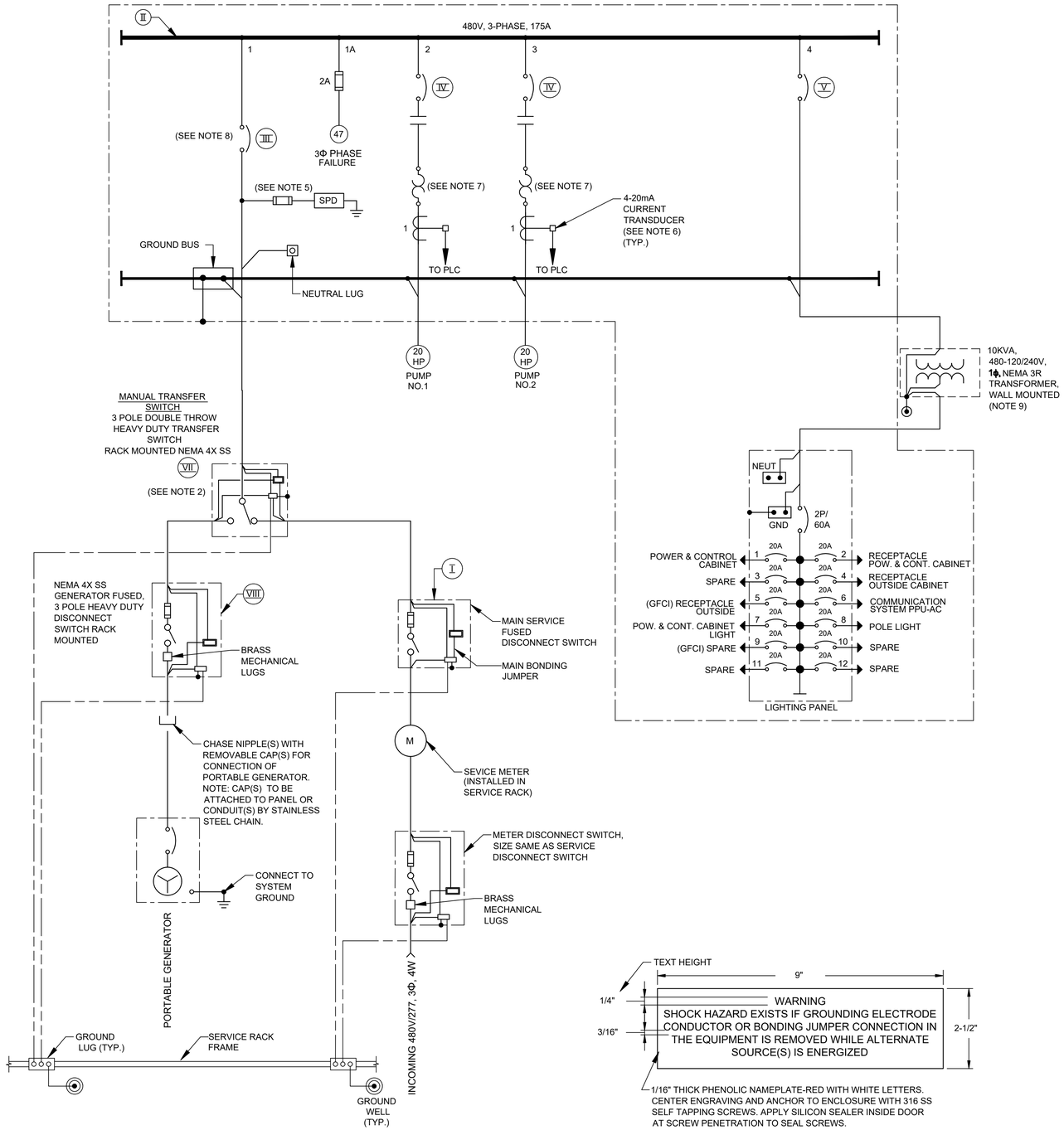

ELECTRICAL WARNING NAMEPLATE N-EW ENGRAVING

ITEM	CIRCUIT	DESCRIPTION	RATINGS FOR PUMP SIZES INDICATED 2 @ 20HP
I	--	MAIN DISCONNECT SWITCH	
		OPERATING VOLTAGE	480V
		CURRENT RATING	200A
		CURRENT LIMITING	CLASS J
		FUSES TYPE & SIZE	100A
II	--	POWER & CONTROL CABINET POWER DISTRIBUTION BLOCK	
		OPERATING VOLTAGE	480V
		CURRENT RATING	175A
		NEUTRAL SIZE & TYPE	100 LUG
		BUS BRACING	42KA SYM
III	1	MAIN BREAKER	
		3 POLE - TYPE	MOLDED CASE
		MOUNTING	FIXED
		OPERATING VOLTAGE	480V
		FRAME SIZE	150A
		TRIP SETTING	100A
		INTERRUPT CAPACITY	42KA SYM
		OPTIONS	NONE
IV	2 3	PUMP MOTOR STARTERS	
		QUANTITY	2
		MOUNTING	FIXED
		SHORT CIRCUIT PROTECTION	
		3 POLE - TYPE	MCP
		OPERATING VOLTAGE	480V
		FRAME SIZE	150A
		TRIP SETTING	60A
		INTERRUPT CAPACITY	65KA SYM
		MOTOR STARTING CONTACTOR	
		3 POLE - TYPE	AIR
		OPERATING VOLTAGE	480V
		SIZE	NEMA 2
		OVERLOAD PROTECTION	SOLID STATE MOR
		TYPE	
V	4	LIGHTING TRANSFORMER FEEDER BREAKER	
		NO. OF POLES	3
		TYPE	MOLDED CASE
		OPERATING VOLTAGE	480V
		FRAME SIZE	150A
		TRIP SETTING	30A
		INTERRUPT CAPACITY	42KA SYM
VII	--	MANUAL TRANSFER SWITCH	3P, 4W SN
		OPERATING VOLTAGE	480V
		CURRENT RATING	200A
VIII	--	GENERATOR FUSED DISCONNECT SWITCH	3P, 4W SN
		OPERATING VOLTAGE	480V
		CURRENT RATING	200A
		CURRENT LIMITING	CLASS J
		FUSES TYPE & SIZE	100A

LOAD CALCULATION			
ITEM	DESCRIPTION	HP	FLI*
1	PUMP NO. 1	20 HP	27A
2	PUMP NO. 2	20 HP	27A
3	LIGHTING PANEL		15A
SUBTOTAL			69A
25% OF LARGEST MOTOR LOAD			7A
MINIMUM AMPACITY @480V,3Φ			76A

* BASED ON SELECTED PUMP MFG DATA

NOTES:

1. FOR DESCRIPTION AND RATINGS OF ITEMS INDICATED WITH ROMAN NUMERAL FLAGS, SEE DEVICE RATINGS SCHEDULE.
2. PROVIDE A NORMALLY OPEN (NO) AUXILIARY CONTACT FOR BOTH ON POSITIONS.
3. CONTRACTOR SHALL VERIFY ACTUAL AMPERAGES OF MOTORS AND SIZE STARTERS, MOTOR CIRCUIT PROTECTORS, ETC. ACCORDINGLY.
4. REFER TO SPEC SECTION 16120 FOR CONDUCTOR COLOR CODE.
5. PROVIDE FUSE SIZE ACCORDING TO MANUFACTURER'S SPECIFICATIONS.
6. PROVIDE 5A PRIMARY TO 4-20mA CURRENT TRANSDUCER.
7. MOTOR OVERLOAD RELAY.
8. PROVIDE BREAKER WITH KIRK KEY INTER-CONNECTED WITH GENERATOR/TRANSFER BREAKER.
9. TRANSFORMER TO BE MOUNTED ON CABINET EXTERIOR SIDE.

NO.	DATE	REVISION	APP.

HATCH
750 TOWN & COUNTRY BLVD
SUITE 650
HOUSTON, TX 77024
P: 832-930-7670
TX FIRM NUMBER: F-314

SURVEYED BY:
AMANI ENGINEERING, INC.
FB NO. P-6357

STATE OF TEXAS
GUY N SEVERN
105809
LICENSED PROFESSIONAL ENGINEER
7/21/2026

CITY OF HOUSTON
HOUSTON PUBLIC WORKS

LIFT STATION RENEWAL & REPLACEMENT PROJECT
POST OAK #2

SINGLE LINE DIAGRAM

WBS NUMBER	FOR CITY OF HOUSTON USE ONLY
R-000267-0173-4	HOUSTON PUBLIC WORKS ACCEPTED AND FILED 82825 CITY DRAWING NUMBER Approval Date 08/14/26 HOUSTON TX
DRAWING SCALE	
NTS	
CITY OF HOUSTON PM	
NUPUR KRISHNAN P.E. N.K.	

C1E29

SHEET NO. 74 OF 274

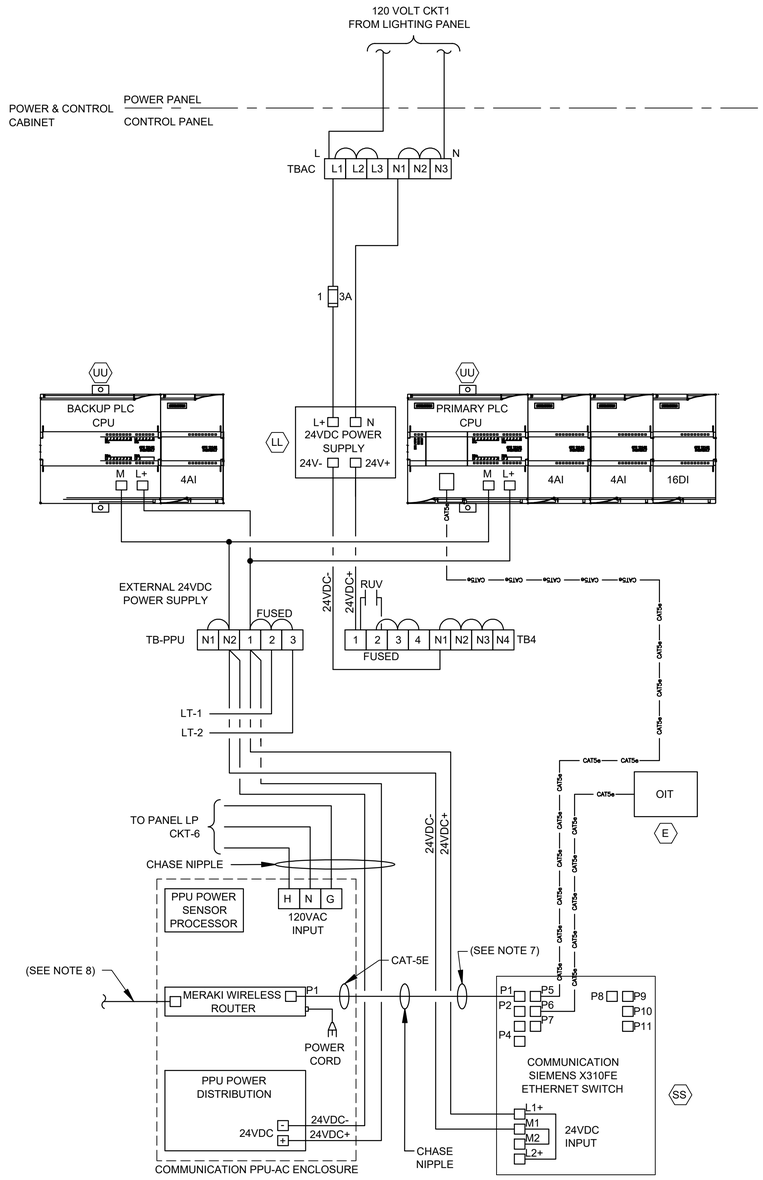

CONTROL POWER &
COMMUNICATIONS WIRING

DIAGRAM

NTS

(SEE NOTE 8)

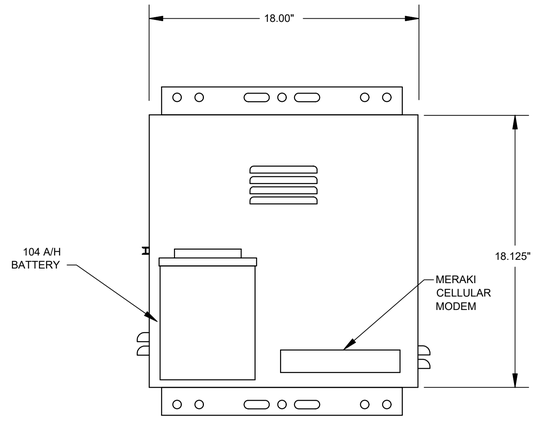

PPU-AC ENCLOSURE
FRONT VIEW

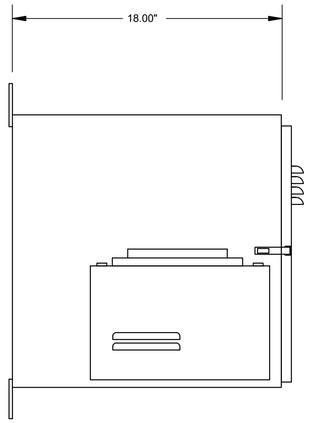

PPU-AC ENCLOSURE
SIDE VIEW

PPU-AC
CONTROL ENCLOSURE

ELEVATION

NTS

(SEE NOTE 4)

NOTES:

1. FOR DESCRIPTION AND RATINGS OF ITEMS INDICATED WITH ITEM TAG, SEE DEVICE RATINGS SCHEDULE.
2. REFER TO SPEC SECTION 16120 FOR CONDUCTOR COLOR CODE.
3. THE PLC POWER SUPPLY SHALL FEED THE 24VDC I/O.
4. SEE SHEET C1E24 FOR EQUIPMENT AND DEVICE SCHEDULE.
5. COORDINATE WITH VENDOR TO PROVIDE PROPER VENTILATION WHERE APPLICABLE.
6. COMMUNICATION PPU-AC & SCADA SHALL BE PROVIDED BY CONTRACTOR INCLUDING TO RUN CONDUITS & WIRES.
7. ETHERNET CABLE FOR MERAKI CELLULAR ROUTER (P1).
8. POE CABLE TO RADIO.

NO.	DATE	REVISION	APP.

HATCH
750 TOWN & COUNTRY BLVD
SUITE 650
HOUSTON, TX 77024
P: 832-930-7670
TX FIRM NUMBER: F-314

SURVEYED BY:
AMANI ENGINEERING, INC.
FB NO. P-6357

STATE OF TEXAS
GUY N SEVERN
105809
LICENSED
PROFESSIONAL ENGINEER
7/21/2026

CITY OF HOUSTON

HOUSTON PUBLIC WORKS

LIFT STATION RENEWAL & REPLACEMENT PROJECT

POST OAK #2

COMMUNICATION DIAGRAM

WBS NUMBER
R-000267-0173-4
DRAWING SCALE
AS NOTED
CITY OF HOUSTON PM
NUPUR KRISHNAN P.E. N.K.

FOR CITY OF HOUSTON USE ONLY

HOUSTON
PUBLIC WORKS
ACCEPTED AND FILED
82825
CITY DRAWING NUMBER
Approval Date 08/14/26
HOUSTON TX

C1E30

SHEET NO. 75 OF 274

PLOTTED: 8/11/2026 11:35 AM
PLOT STYLE: COH.ctb
FILE PATH: \\wuspplot01\d$\Global ProjectWise Plotting - WUS\Queue 4\queue4.dwg

PLOTTED: 8/11/2026 11:35 AM
PLOT STYLE: COH.ctb
FILE PATH: \\wusppplot01\d$\Global ProjectWise Plotting - WUS\Queue 5\queue5.dwg

HMI

POWER & CONTROL CABINET (PLC)

POWER & CONTROL CABINET

NO.	DATE	REVISION	APP.

PUMP NO. 1: SEAL FAIL ALARM MA 1; MOTOR OVERLOAD ALARM MO 1; MOTOR CURRENT II 1; HIGH TEMP ALARM TH 1; IN HAND HI 1; IN AUTO IA 1; ON/OFF YFS 1; START/STOP YCS 1

PUMP NO. 2: SEAL FAIL ALARM MA 2; MOTOR OVERLOAD ALARM MO 2; MOTOR CURRENT II 2; HIGH TEMP ALARM TH 2; IN HAND HI 2; IN AUTO IA 2; ON/OFF YFS 2; START/STOP YCS 2

PRIMARY PLC: ALARMS RESET RE 1; FLOAT HIGH-HIGH WETWELL LEVEL LAHH 1A

BACKUP PLC: PUMP NO. 1 START/STOP YCS 1A; PUMP NO. 2 START/STOP YCS 2A

480V

PUMP NO. 1 H/O/A (T) RUN (R)

PUMP NO. 2 H/O/A (T) RUN (R)

PRIMARY PLC (G)

BACKUP PLC (G)

PUMP POWER & CONTROL CABINET

ALARMS RESET

OIT

TO SHEET C1E32

C1E32

C1E32

WET WELL

LT 1

LE 1

LT 2

LE 2

LSH 1A

TSH 1A

M

PUMP NO.1

FS2 HIGHHIGH LEVEL FLOAT SWITCH

LSH 2A

TSH 2A

M

PUMP NO.2

FS1 HIGH LEVEL FLOAT SWITCH

AIR-RELEASE

XX"-DIP

XX"-DIP

XX"-DIP

XX"-DIP

DISCHARGE

HATCH
750 TOWN & COUNTRY BLVD
SUITE 650
HOUSTON, TX 77024
P: 832-930-7670
TX FIRM NUMBER: F-314

SURVEYED BY:
AMANI ENGINEERING, INC.
FB NO. P-6357

STATE OF TEXAS
GUY N SEVERN
105809
LICENSED PROFESSIONAL ENGINEER
7/21/2026

CITY OF HOUSTON

HOUSTON PUBLIC WORKS

LIFT STATION RENEWAL & REPLACEMENT PROJECT
POST OAK #2

PROCESS & INSTRUMENTATION DIAGRAM-I

WBS NUMBER
R-000267-0173-4
DRAWING SCALE
AS NOTED
CITY OF HOUSTON PM
NUPUR KRISHNAN P.E. N.K.

FOR CITY OF HOUSTON USE ONLY

HOUSTON PUBLIC WORKS
ACCEPTED AND FILED
82825
CITY DRAWING NUMBER
Approval Date 08/14/26
HOUSTON TX

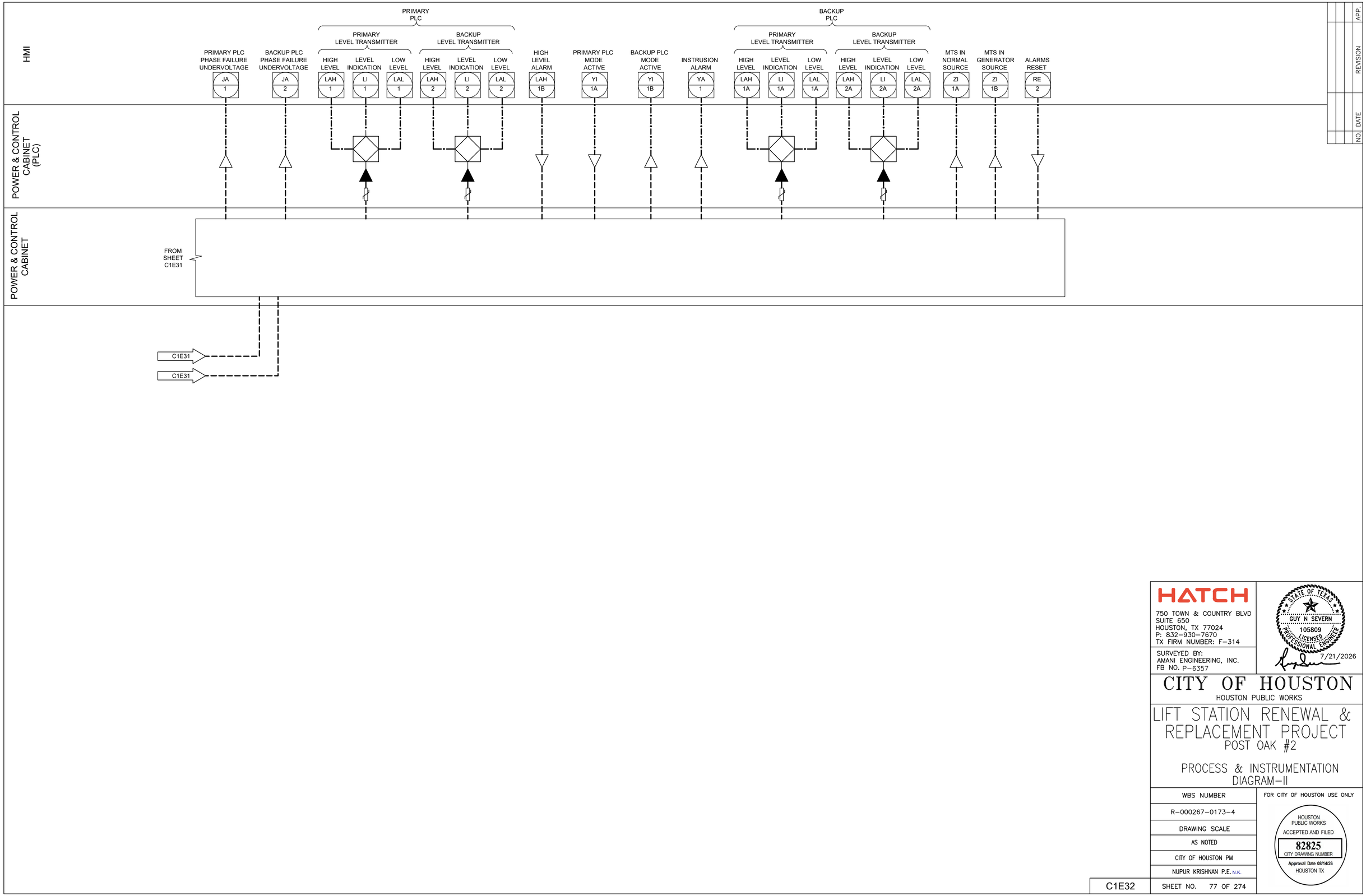

PLOTTED: 8/11/2026 11:38 AM

PLOT STYLE: COH.ctb

FILE PATH: \\wusppplot01\d$\Global ProjectWise Plotting - WUS\Queue 5\queue5.dwg

HATCH
750 TOWN & COUNTRY BLVD
SUITE 650
HOUSTON, TX 77024
P: 832-930-7670
TX FIRM NUMBER: F-314

SURVEYED BY:
AMANI ENGINEERING, INC.
FB NO. P-6357

STATE OF TEXAS
GUY N SEVERN
105809
LICENSED
PROFESSIONAL ENGINEER
7/21/2026

CITY OF HOUSTON

HOUSTON PUBLIC WORKS

LIFT STATION RENEWAL & REPLACEMENT PROJECT
POST OAK #2

PROCESS & INSTRUMENTATION DIAGRAM-II

WBS NUMBER
R-000267-0173-4
DRAWING SCALE
AS NOTED
CITY OF HOUSTON PM
NUPUR KRISHNAN P.E. N.K.
SHEET NO. 77 OF 274

FOR CITY OF HOUSTON USE ONLY

HOUSTON PUBLIC WORKS
ACCEPTED AND FILED
82825
CITY DRAWING NUMBER
Approval Date 08/14/26
HOUSTON TX

C1E32

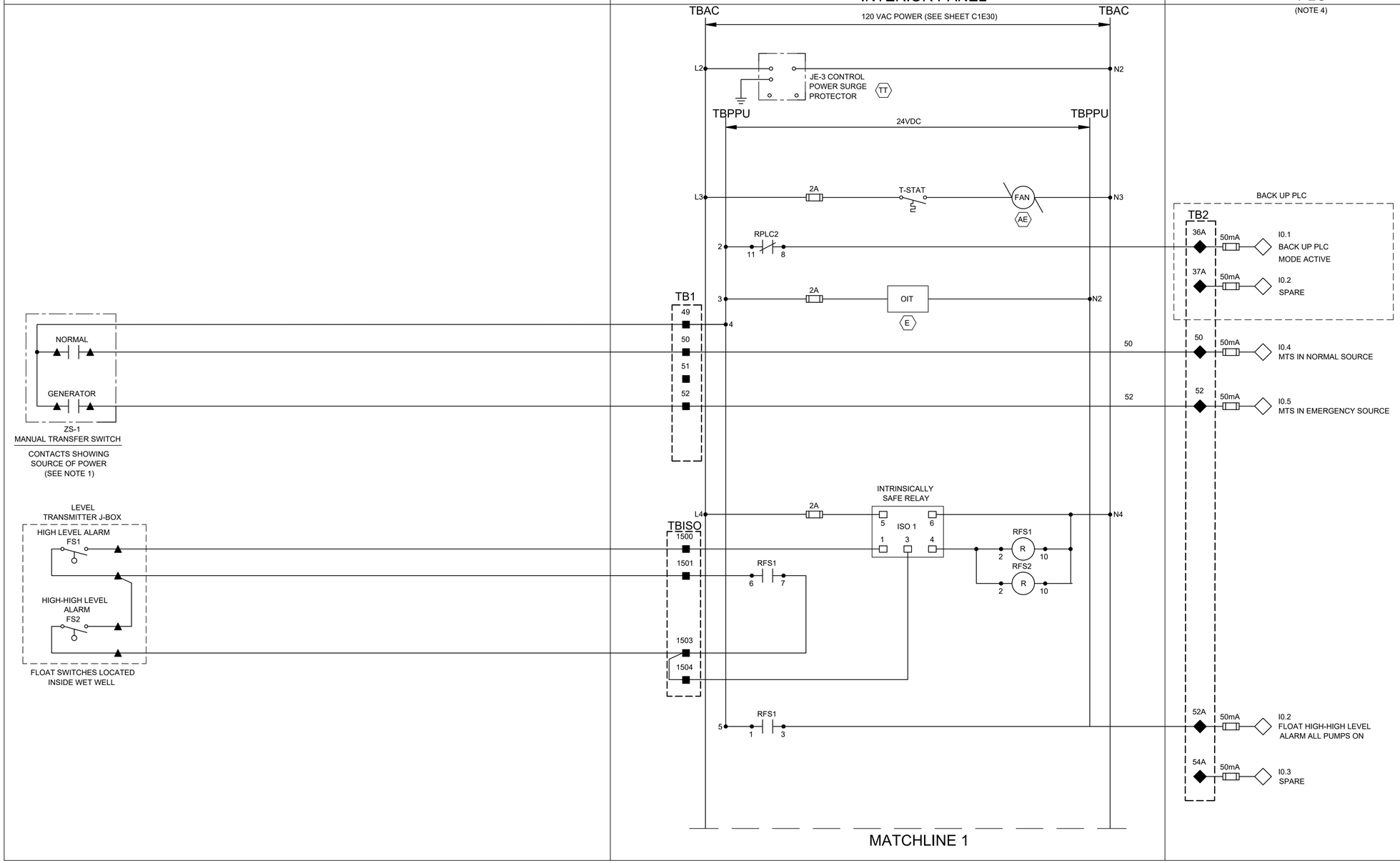

NOTES:

1. PROVIDE MANUAL TRANSFER SWITCH DRY CONTACT.
2. ALL FLOAT CONTROL CIRCUIT WIRES COLOR SHALL BE YELLOW.
3. SEE SHEET C1E24 FOR EQUIPMENT AND DEVICE SCHEDULE.
4. PRIMARY PLC UNLESS INDICATED OTHERWISE.

LEGEND

- △ DEVICE OR FIELD TERMINAL LOCATED AT MOTOR
- ✳ DEVICE OR FIELD TERMINAL LOCATED REMOTE
- □ DEVICE OR FIELD TERMINAL LOCATED AT MCC/POWER PANEL
- ■ FIELD TERMINAL LOCATED AT CONTROL PANEL
- ▲ REMOTE TERMINAL
- ● DEVICE TERMINAL NO.
- ◆ PLC INTERFACE TERMINAL

NO.	DATE	REVISION	APP.

HATCH
750 TOWN & COUNTRY BLVD
SUITE 650
HOUSTON, TX 77024
P: 832-930-7670
TX FIRM NUMBER: F-314

SURVEYED BY:
AMANI ENGINEERING, INC.
FB NO. P-6357

STATE OF TEXAS
GUY N SEVERN
105809
LICENSED
PROFESSIONAL ENGINEER
7/21/2026

CITY OF HOUSTON
HOUSTON PUBLIC WORKS

LIFT STATION RENEWAL & REPLACEMENT PROJECT
POST OAK #2

POWER & CONTROL CABINET
CONTROL WIRING DIAGRAM-I

WBS NUMBER	FOR CITY OF HOUSTON USE ONLY
R-000267-0173-4	HOUSTON PUBLIC WORKS ACCEPTED AND FILED 82825 CITY DRAWING NUMBER Approval Date 08/14/26 HOUSTON TX
DRAWING SCALE	
NTS	
CITY OF HOUSTON PM	
NUPUR KRISHNAN P.E. N.K.	
SHEET NO. 78 OF 274	

C1E33

PLOTTED: 8/11/2026 11:35 AM
PLOT STYLE: COH.ctb
FILE PATH: \\wusppplot01\d$\Global ProjectWise Plotting - WUS\Queue 3\queue3.dwg

FIELD

POWER & CONTROL CABINET

INTERIOR PANEL

PLC
(NOTE 2)

TBAC TPPU MATCHLINE 1 TPPU TBAC

120 VAC POWER

24VDC

BACK UP PLC

TB2

L+ CPU POWER

M CPU COMMON

6

N3

35B 1A QO.0 PUMP NO.1 CALL TO RUN

RBRM1 5 R 2 10 N4

38B 1A QO.1 PUMP NO.2 CALL TO RUN

RBRM2 6 R 2 10 N5

41B 1A QO.2 SPARE

47B 1A QO.4 SPARE

TB1

1004

ANALOG ISOLATOR (YY)

13B 50mA AIO.0 PRIMARY WET WELL LEVEL TRANSMITTER

13AB

13GB

7

1

L+ CPU POWER

M CPU COMMON

8

24-

1002

ANALOG ISOLATOR (YY)

14B 50mA AIO.2 BACKUP WET WELL LEVEL TRANSMITTER

14AB

14GB

L+ CPU POWER

M CPU COMMON

24V-

N6

2

9

11 1001 1001A 12 1003 1003A

ANALOG I/O SURGE SUPPRESSOR (CC)

24V+ 1001B 24V+ 1003B

13 50mA AIO.0 PRIMARY WET WELL LEVEL TRANSMITTER

13A

13G

14 50mA AIO.2 BACKUP WET WELL LEVEL TRANSMITTER

14A

14G

RADAR LEVEL TRANSMITTER JUNCTION BOX

MFG. CABLE

PRIMARY RADAR LEVEL TRANSMITTER

LT-1

MFG. CABLE

BACK UP RADAR LEVEL TRANSMITTER

LT-2

MATCHLINE 2

NOTES:

1. SEE SHEET C1E24 FOR EQUIPMENT AND DEVICE SCHEDULE.
2. PRIMARY PLC UNLESS INDICATED OTHERWISE.

LEGEND

- △ DEVICE OR FIELD TERMINAL LOCATED AT MOTOR
- ✳ DEVICE OR FIELD TERMINAL LOCATED REMOTE
- □ DEVICE OR FIELD TERMINAL LOCATED AT MCC/POWER PANEL
- ■ FIELD TERMINAL LOCATED AT CONTROL PANEL
- ▲ REMOTE TERMINAL
- ● DEVICE TERMINAL NO.
- ◆ PLC INTERFACE TERMINAL

NO.	DATE	REVISION	APP.

HATCH
750 TOWN & COUNTRY BLVD
SUITE 650
HOUSTON, TX 77024
P: 832-930-7670
TX FIRM NUMBER: F-314

SURVEYED BY:
AMANI ENGINEERING, INC.
FB NO. P-6357

STATE OF TEXAS
GUY N SEVERN
105809
LICENSED PROFESSIONAL ENGINEER
7/21/2026

CITY OF HOUSTON

HOUSTON PUBLIC WORKS

LIFT STATION RENEWAL & REPLACEMENT PROJECT
POST OAK #2

POWER & CONTROL CABINET CONTROL WIRING DIAGRAM-II

WBS NUMBER	FOR CITY OF HOUSTON USE ONLY
R-000267-0173-4	HOUSTON PUBLIC WORKS ACCEPTED AND FILED 82825 CITY DRAWING NUMBER Approval Date 08/14/26 HOUSTON TX
DRAWING SCALE	
NTS	
CITY OF HOUSTON PM	
NUPUR KRISHNAN P.E. N.K.	
SHEET NO. 79 OF 274	

C1E34

PLOTTED: 8/11/2026 11:38 AM
PLOT STYLE: COH.ctb
FILE PATH: \\wusppplot01\d$\Global ProjectWise Plotting - WUS\Queue 3\queue3.dwg

PLOTTED: 8/11/2026 11:36 AM
PLOT STYLE: COH.ctb
FILE PATH: \\wuspplot01\d$\Global ProjectWise Plotting - WUS\Queue 1\queue1.dwg

FIELD	POWER & CONTROL CABINET			
	POWER SIDE BACK PANEL	DOOR PANEL	INTERIOR PANEL	PLC (NOTE 3)

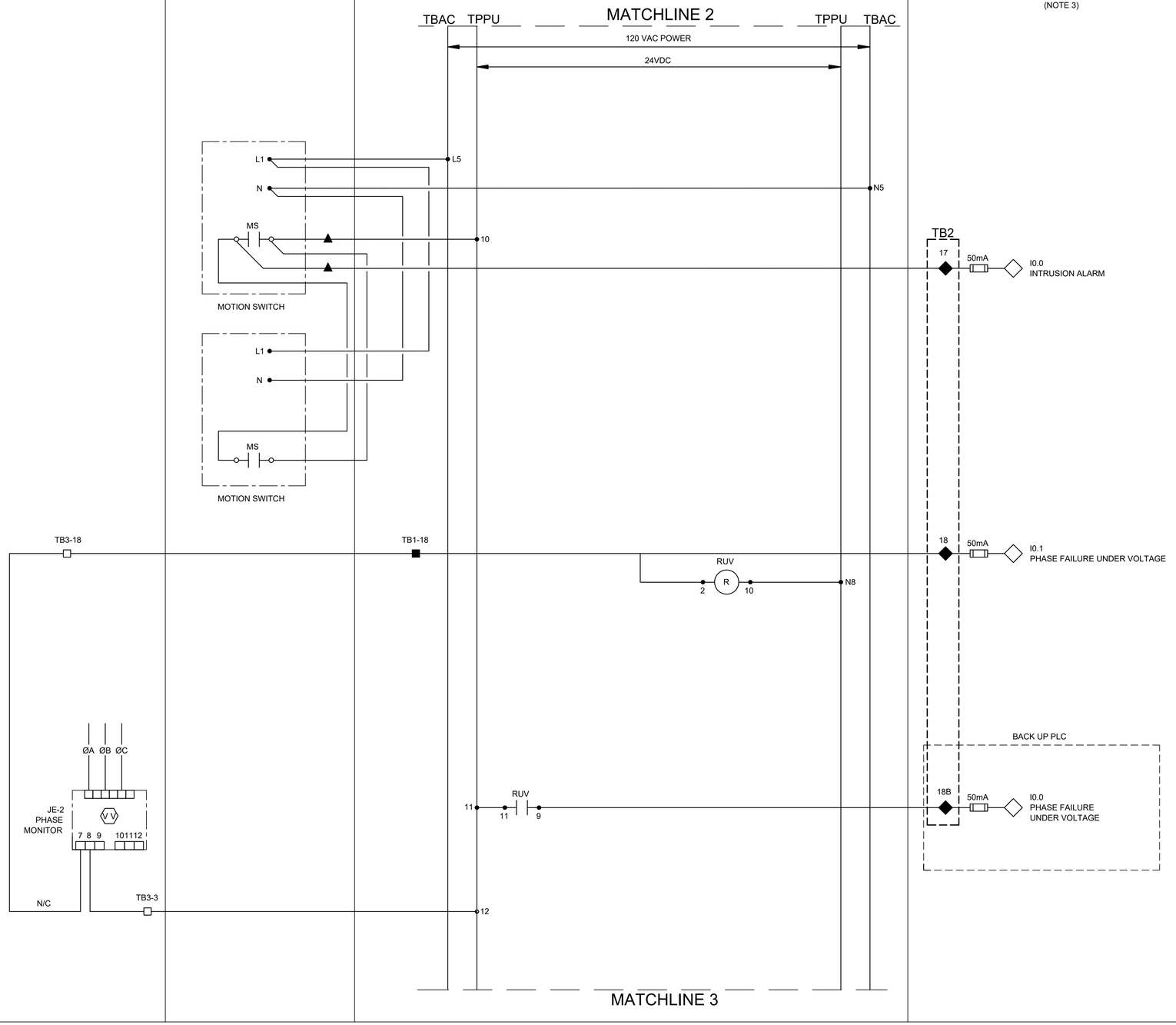

NO.	DATE	REVISION	APP.

NOTES:

1. PROVIDE ONE LIMIT SWITCH PER EXTERIOR CONTROL PANEL AND POWER PANEL DOOR, WIRED IN PARALLEL.
2. SEE SHEET C1E24 FOR EQUIPMENT AND DEVICE SCHEDULE.
3. PRIMARY PLC UNLESS INDICATED OTHERWISE.

LEGEND

- △ DEVICE OR FIELD TERMINAL LOCATED AT MOTOR
- ✳ DEVICE OR FIELD TERMINAL LOCATED REMOTE
- □ DEVICE OR FIELD TERMINAL LOCATED AT MCC/POWER PANEL
- ■ FIELD TERMINAL LOCATED AT CONTROL PANEL
- ▲ REMOTE TERMINAL
- ● DEVICE TERMINAL NO.
- ◆ PLC INTERFACE TERMINAL

HATCH
750 TOWN & COUNTRY BLVD
SUITE 650
HOUSTON, TX 77024
P: 832-930-7670
TX FIRM NUMBER: F-314

SURVEYED BY:
AMANI ENGINEERING, INC.
FB NO. P-6357

STATE OF TEXAS
GUY N SEVERN
105809
LICENSED PROFESSIONAL ENGINEER
7/21/2026

CITY OF HOUSTON
HOUSTON PUBLIC WORKS

LIFT STATION RENEWAL & REPLACEMENT PROJECT
POST OAK #2

POWER & CONTROL CABINET
CONTROL WIRING DIAGRAM-III

WBS NUMBER
R-000267-0173-4
DRAWING SCALE
NTS
CITY OF HOUSTON PM
NUPUR KRISHNAN P.E. N.K.
SHEET NO. 80 OF 274

FOR CITY OF HOUSTON USE ONLY

HOUSTON PUBLIC WORKS
ACCEPTED AND FILED
82825
CITY DRAWING NUMBER
Approval Date 08/14/26
HOUSTON TX

C1E35

PLOTTED: 8/11/2026 11:36 AM
PLOT STYLE: COH.ctb
FILE PATH: \\wuspplot01\d$\Global ProjectWise Plotting - WUS\Queue 2\queue2.dwg

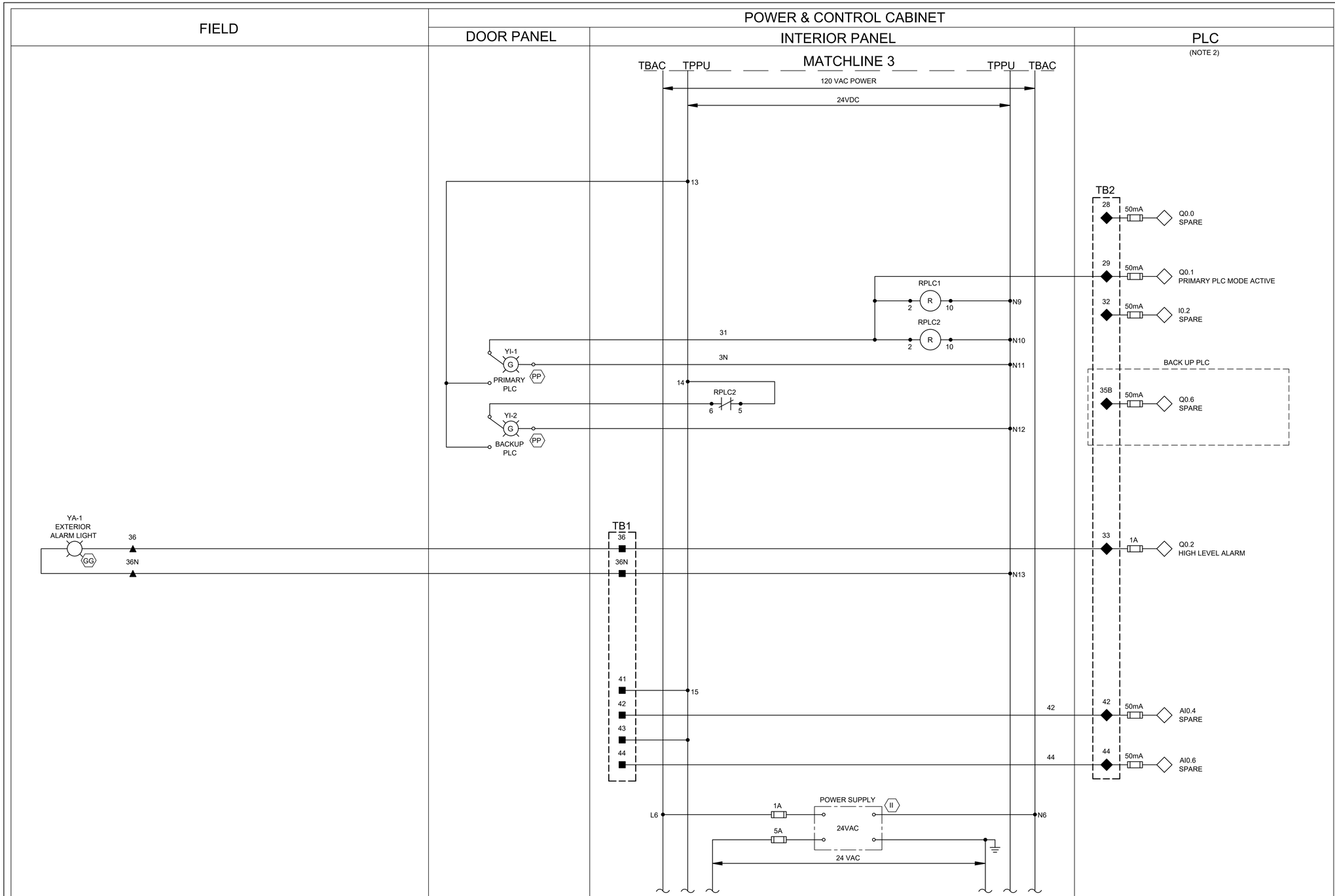

NOTES:

1. SEE SHEET C1E24 FOR EQUIPMENT AND DEVICE SCHEDULE.
2. PRIMARY PLC UNLESS INDICATED OTHERWISE.

NO.	DATE	REVISION	APP.

LEGEND

- △ DEVICE OR FIELD TERMINAL LOCATED AT MOTOR
- ✳ DEVICE OR FIELD TERMINAL LOCATED REMOTE
- □ DEVICE OR FIELD TERMINAL LOCATED AT MCC/POWER PANEL
- ■ FIELD TERMINAL LOCATED AT CONTROL PANEL
- ▲ REMOTE TERMINAL
- ● DEVICE TERMINAL NO.
- ◆ PLC INTERFACE TERMINAL

HATCH
750 TOWN & COUNTRY BLVD
SUITE 650
HOUSTON, TX 77024
P: 832-930-7670
TX FIRM NUMBER: F-314

SURVEYED BY:
AMANI ENGINEERING, INC.
FB NO. P-6357

STATE OF TEXAS
GUY N SEVERN
105809
LICENSED
PROFESSIONAL ENGINEER
7/21/2026

CITY OF HOUSTON
HOUSTON PUBLIC WORKS

LIFT STATION RENEWAL & REPLACEMENT PROJECT
POST OAK #2

POWER & CONTROL CABINET
CONTROL WIRING DIAGRAM-IV

WBS NUMBER
R-000267-0173-4
DRAWING SCALE
NTS
CITY OF HOUSTON PM
NUPUR KRISHNAN P.E. N.K.

FOR CITY OF HOUSTON USE ONLY

HOUSTON PUBLIC WORKS
ACCEPTED AND FILED
82825
CITY DRAWING NUMBER
Approval Date 08/14/26
HOUSTON TX

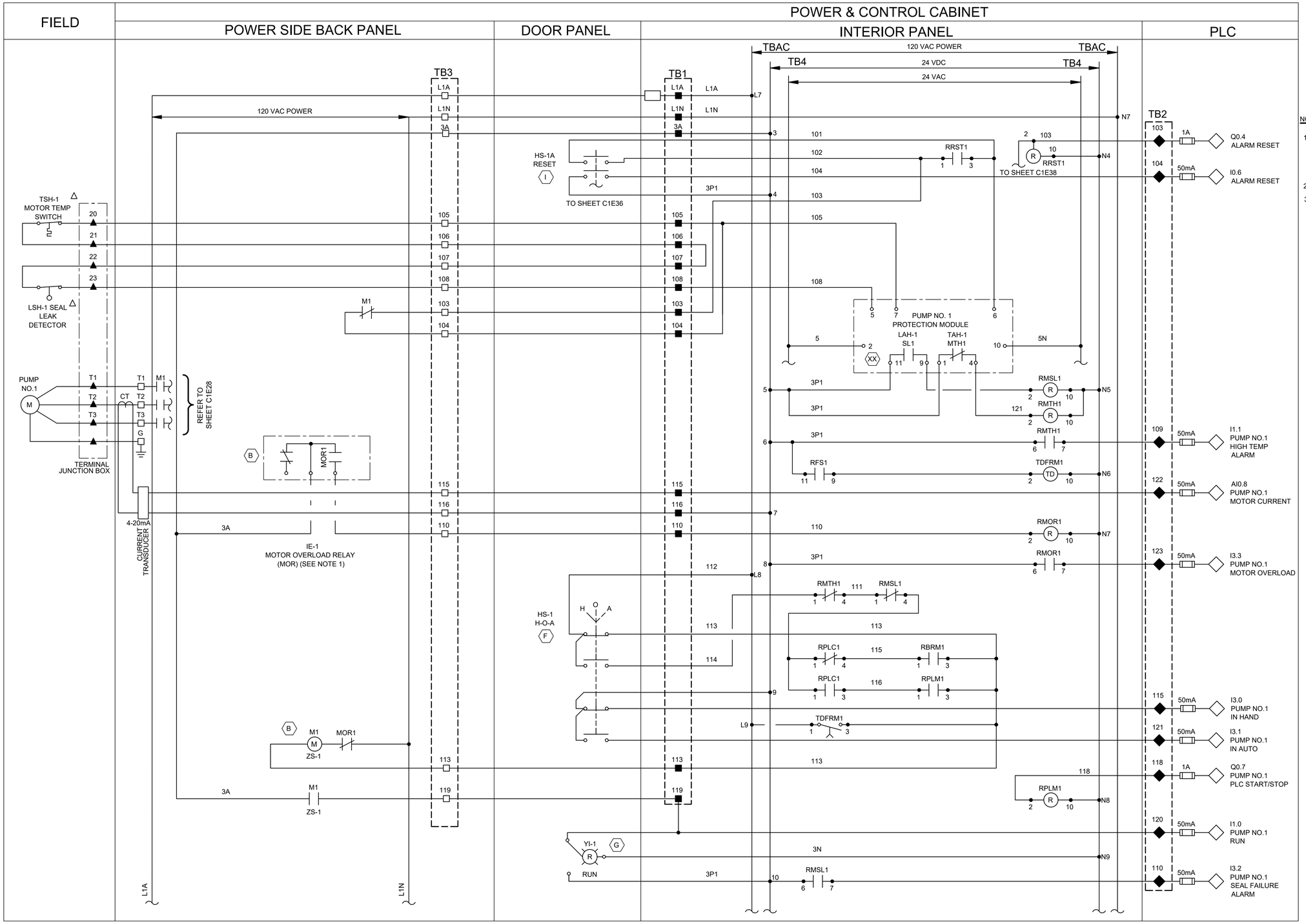

NOTES:

1. MOTOR OVERLOAD RELAY OUTPUT CONTACT SHOWN IS NORMALLY CLOSED WHEN RELAY IS DE-ENERGIZED, OPEN WHEN ENERGIZED, AND CLOSED WHEN IN ALARM. VERIFY OPERATION OF RELAY PROVIDED AND ADJUST CONNECTION OF RMOR AUXILIARY RELAYS.
2. SEE SHEET C1E24 FOR EQUIPMENT AND DEVICE SCHEDULE.
3. ALL FLOAT CONTROL CIRCUIT WIRES COLOR SHALL BE YELLOW.

LEGEND

- △ DEVICE OR FIELD TERMINAL LOCATED AT MOTOR
- ✳ DEVICE OR FIELD TERMINAL LOCATED REMOTE
- □ DEVICE OR FIELD TERMINAL LOCATED AT MCC/POWER PANEL
- ■ FIELD TERMINAL LOCATED AT CONTROL PANEL
- ▲ REMOTE TERMINAL
- ● DEVICE TERMINAL NO.
- ◆ PLC INTERFACE TERMINAL

NO.	DATE	REVISION	APP.

HATCH
750 TOWN & COUNTRY BLVD
SUITE 650
HOUSTON, TX 77024
P: 832-930-7670
TX FIRM NUMBER: F-314

SURVEYED BY:
AMANI ENGINEERING, INC.
FB NO. P-6357

STATE OF TEXAS
GUY N SEVERN
105809
LICENSED PROFESSIONAL ENGINEER
7/21/2026

CITY OF HOUSTON
HOUSTON PUBLIC WORKS

LIFT STATION RENEWAL & REPLACEMENT PROJECT
POST OAK #2

PUMP NO.1 CONTROL WIRING DIAGRAM

WBS NUMBER	FOR CITY OF HOUSTON USE ONLY
R-000267-0173-4	HOUSTON PUBLIC WORKS ACCEPTED AND FILED 82825 CITY DRAWING NUMBER Approval Date 08/14/26 HOUSTON TX
DRAWING SCALE	
AS NOTED	
CITY OF HOUSTON PM	
NUPUR KRISHNAN P.E. N.K.	
SHEET NO. 82 OF 274	

C1E37

PLOTTED: 8/11/2026 11:38 AM
PLOT STYLE: COH.ctb
FILE PATH: \\wusppplot01\d$\Global ProjectWise Plotting - WUS\Queue 4\queue4.dwg

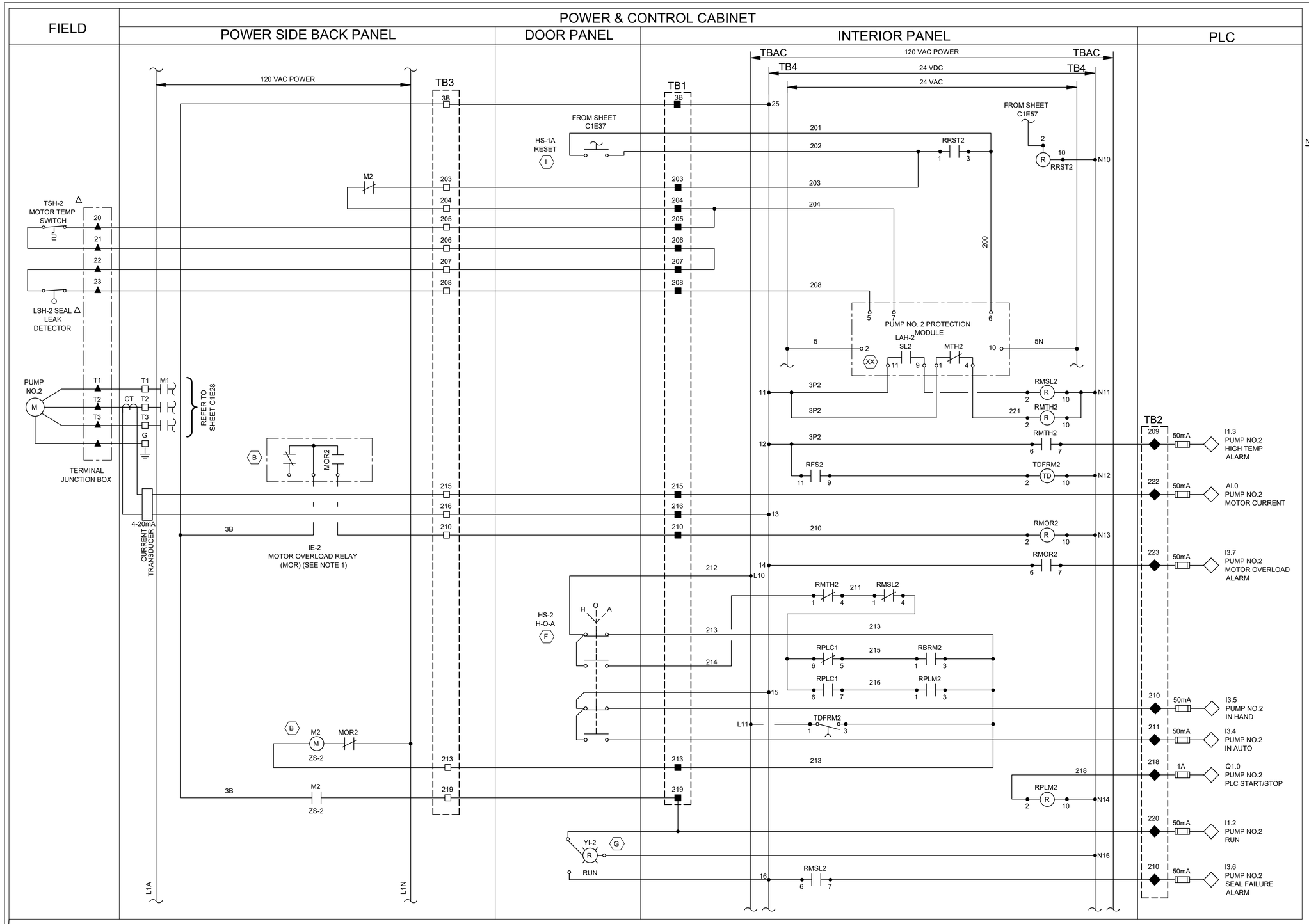

NOTES:

1. MOTOR OVERLOAD RELAY OUTPUT CONTACT SHOWN IS NORMALLY CLOSED WHEN RELAY IS DE-ENERGIZED, OPEN WHEN ENERGIZED, AND CLOSED WHEN IN ALARM. VERIFY OPERATION OF RELAY PROVIDED AND ADJUST CONNECTION OF RMOR AUXILIARY RELAYS.
2. SEE SHEET C1E24 FOR EQUIPMENT AND DEVICE SCHEDULE.
3. ALL FLOAT CONTROL CIRCUIT WIRES COLOR SHALL BE YELLOW.

LEGEND

- △ DEVICE OR FIELD TERMINAL LOCATED AT MOTOR
- ✳ DEVICE OR FIELD TERMINAL LOCATED REMOTE
- □ DEVICE OR FIELD TERMINAL LOCATED AT MCC/POWER PANEL
- ■ FIELD TERMINAL LOCATED AT CONTROL PANEL
- ▲ REMOTE TERMINAL
- ● DEVICE TERMINAL NO.
- ◆ PLC INTERFACE TERMINAL

NO.	DATE	REVISION	APP.

HATCH
750 TOWN & COUNTRY BLVD
SUITE 650
HOUSTON, TX 77024
P: 832-930-7670
TX FIRM NUMBER: F-314

SURVEYED BY:
AMANI ENGINEERING, INC.
FB NO. P-6357

STATE OF TEXAS
GUY N SEVERN
105809
LICENSED PROFESSIONAL ENGINEER
7/21/2026

CITY OF HOUSTON
HOUSTON PUBLIC WORKS

LIFT STATION RENEWAL & REPLACEMENT PROJECT
POST OAK #2

PUMP NO.2 CONTROL WIRING DIAGRAM

WBS NUMBER	FOR CITY OF HOUSTON USE ONLY
R-000267-0173-4	HOUSTON PUBLIC WORKS ACCEPTED AND FILED 82825 CITY DRAWING NUMBER Approval Date 08/14/26 HOUSTON TX
DRAWING SCALE	
AS NOTED	
CITY OF HOUSTON PM	
NUPUR KRISHNAN P.E. N.K.	
SHEET NO. 83 OF 274	

C1E38

PLOTTED: 8/11/2026 11:42 AM
PLOT STYLE: COH.ctb
FILE PATH: \\wusppplot01\d$\Global ProjectWise Plotting - WUS\Queue 2\queue2.dwg

	DESCRIPTION	SERVICE		ROUTING			WIRE SIZE & CONDUIT SIZE
		VOLTAGE	AMPS OR HP	FROM	TO	VIA	
100	SERVICE ENTRANCE	480VAC	100A	UTILITY POWER SERVICE	METER DISCONNECT	--	SEE DETAIL Z0E128
100A	SERVICE POWER	480VAC	100A	MANUAL TRANSFER SWITCH	POWER BACK PANEL (POWER & CONTROL CABINET)	DUCT BANK	4#2 / 1#2, 2"C
100B	NORMAL/EMERGENCY POWER STATUS	24VDC	--	MANUAL TRANSFER SWITCH	CONTROL BACK PANEL (POWER & CONTROL CABINET)	DUCT BANK	2#14, 2"C
100C	EMERGENCY POWER	480VAC	--	GENERATOR FUSED DISCONNECT SWITCH	PORTABLE GENERATOR	CAPPED CONDUITS	3"C (MINIMUN)
101	GROUND ELECTRODE CONDUCTOR	--	--	POWER BACK PANEL (POWER & CONTROL CABINET)	GROUND FIELD	--	1#8G
104	GROUND ELECTRODE CONDUCTOR	--	--	CONTROL BACK PANEL (POWER & CONTROL CABINET)	GROUND FIELD	--	1#8G
105	COMMUNICATION ANTENNA	--	--	LIGHT & COMMUNICATION POLE	PPU-AC PANEL	DUCT BANK	ETHERNET CABLE, 2"C.
105A	POLE LIGHT	120V	--	LIGHTING PANEL (POWER & CONTROL CABINET)	LIGHT & COMMUNICATION POLE	DUCT BANK	2#12 / 1#12G (POLE LIGHT SWITCH), 2"C.
200	PUMP NO. 1 POWER	480VAC	20 HP	PUMP NO. 1	PUMP NO. 1 JUNCTION BOX	RIGID CONDUIT	MFR CABLE, 2-1/2"C (SEE NOTE 2)
201	PUMP NO. 1 CONTROLS	120V	--	PUMP NO. 1	PUMP NO. 1 JUNCTION BOX	RIGID CONDUIT	INCL MFR CABLE, 2-1/2"C (SEE NOTE 2)
202	PUMP NO. 1 POWER	480VAC	20 HP	PUMP NO. 1 JUNCTION BOX	PUMP STARTER (POWER & CONTROL CABINET)	DUCT BANK	3#10 / 1#10G, 2"C
203	COMBINED PUMP CONTROLS	120V		PUMP NO. 1 JUNCTION BOX	PUMP STARTER (POWER & CONTROL CABINET)	DUCT BANK	(COMBINE 201 & 301) 8#14, 2"C
300	PUMP NO. 2 POWER	480VAC	20 HP	PUMP NO. 2	PUMP NO. 2 JUNCTION BOX	RIGID CONDUIT	MFR CABLE, 2-1/2"C (SEE NOTE 2)
301	PUMP NO. 2 CONTROLS	120V	--	PUMP NO. 2	PUMP NO. 2 JUNCTION BOX	RIGID CONDUIT	INCL MFR CABLE, 2-1/2"C (SEE NOTE 2)
302	PUMP NO. 2 POWER	480VAC	20 HP	PUMP NO. 2 JUNCTION BOX	PUMP STARTER (POWER & CONTROL CABINET)	DUCT BANK	3#10 / 1#10G, 2"C
1000	LEVEL TRANSMITTER LT-1	24VDC	--	LEVEL TRANSMITTER LT-1	TRANSMITTER JUNCTION BOX	RIGID CONDUIT	INCL IN MFR CABLE, 2-1/2"C (SEE NOTE 2)
1001	LEVEL TRANSMITTER LT-2	24VDC	--	LEVEL TRANSMITTER LT-2	TRANSMITTER JUNCTION BOX	RIGID CONDUIT	INCL IN MFR CABLE, 2-1/2"C (SEE NOTE 2)
1002	COMBINED LEVEL TRANSMITTERS & FLOAT SWITCH	24VDC	--	TRANSMITTER JUNCTION BOX	POWER & CONTROL CABINET	DUCT BANK	COMBINE 1000/1001/1003, 4#14+2#14G / 4#14, 2"C
1003	WELL FLOAT SWITCHES	24VDC	--	FLOAT SWITCH NO.1 & NO.2	TRANSMITTER JUNCTION BOX	RIGID CONDUIT	MFR CABLE, 2-1/2"C (SEE NOTE 2)
1100	120 VAC FOR RECEPTACLE	120V	--	LIGHTING PANEL (POWER & CONTROL CABINET)	RECEPTACLE NEXT TO GENERATOR FUSED DISCONNECT SWITCH	DUCT BANK	L5, 2#12 / 1#12G, 2"C
1101	POLE LIGHT SWITCH	120V	--	LIGHTING PANEL (POWER & CONTROL CABINET)	POLE LIGHT SWITCH	DUCT BANK	L8, 2#12 / 1#12G, 2"C
1200	120VAC FOR RECEPTACLE	120V	--	LIGHTING PANEL (POWER & CONTROL CABINET)	RECEPTACLE NEXT TO PUMP NO. 2 J-BOX	DUCT BANK	L4, 2#12 #12G, 2"C,

NOTES:

1. CONDUITS LABELED "FUTURE SPACE" ARE TO BE INSTALLED AND CAPPED IN FIELD.
2. ANY CONDUIT REQUIRING A CSBE SEAL, SHALL BE A MINIMUM SIZE OF 2 1/2".
3. ALL UNDERGROUND CONDUITS (SINGLE AND MULTI-RUN) SHALL BE MINIMUM 2 INCHES AND SHALL BE ENCASED IN REINFORCED CONCRETE DUCTBANK.

NO.	DATE	REVISION	APP.

HATCH
750 TOWN & COUNTRY BLVD
SUITE 650
HOUSTON, TX 77024
P: 832-930-7670
TX FIRM NUMBER: F-314

SURVEYED BY:
AMANI ENGINEERING, INC.
FB NO. P-6357

STATE OF TEXAS
GUY N SEVERN
105809
LICENSED
PROFESSIONAL ENGINEER
7/21/2026

CITY OF HOUSTON
HOUSTON PUBLIC WORKS

LIFT STATION RENEWAL & REPLACEMENT PROJECT
POST OAK #2

CONDUIT SCHEDULE

WBS NUMBER	FOR CITY OF HOUSTON USE ONLY
R-000267-0173-4	HOUSTON PUBLIC WORKS ACCEPTED AND FILED 82825 CITY DRAWING NUMBER Approval Date 08/14/26 HOUSTON TX
DRAWING SCALE	
NTS	
CITY OF HOUSTON PM	
NUPUR KRISHNAN P.E. N.K.	
SHEET NO. 84 OF 274	

C1E39

PLOTTED: 8/11/2026 11:39 AM
PLOT STYLE: COH.ctb
FILE PATH: \\wuspplat01\d$\Global ProjectWise Plotting - WUS\Queue 2\queue2.dwg

CITY OF HOUSTON

CITY SURVEY 5013-7315
SITE CONTROL MONUMENT
FLOODPLAIN RM#040200

N.T.S.

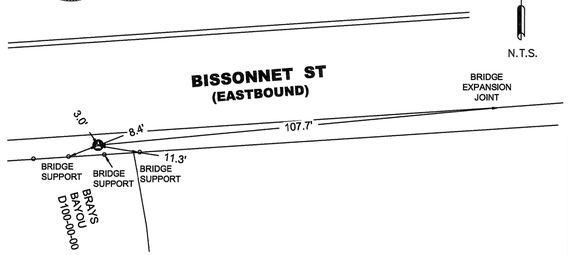

Project WBS# R-000267-0175-3
Texas Coordinate System of 1983,
South Central Zone, U. S. Survey Feet
X= 3,070,036.88
Y= 13,809,790.77

Lat.= N 29° 40' 34.7334"
Lon.= W 95° 31' 49.8680"

Keymap Page: 530T
Orthometric Elevation = 65.79
Ellipsoid Height= -23.84
Geoid: GEOID 18
Datum Source & Adjustment:
2-HR STATIC GPS OBSERVATION
MADE ON MONUMENT ON 10/23/2024

Reference Frame Used: NAD_83(2011)(EPOCH: 2010.0000)
Vertical Adjustment used: NAVD 88 GEOID18
General Location: LOCATED ON THE SOUTHSIDE OF BISSONNET STREET, APPROXIMATELY 700 FEET SOUTHWEST OF S. GESSNER ROAD INTERSECTION.

Date Set: MAY 14, 2003 Type of Mark: BRASS DISK

3 Nearest project control points (bearings and distances stated below):
1. CP #601, X-CUT, N 60° 11' 14" E, 151.44'
2. CP #1, 5/8" IRON ROD CAPPED "AMANI" , N 78° 13' 19" E, 298.90'
3. CP #600, 5/8" IRON ROD CAPPED "AMANI" , N 45° 55' 24" E, 377.52'

NOTE:
1. Bearings are grid bearings.
2. Combined Factor (C.F)= 0.99988207.

Surface= Grid
C.F.

STATE OF TEXAS REGISTERED CHRISTINA I. WEAVERS 6753 PROFESSIONAL LAND SURVEYOR
11.27.24

Surveyed By: Amani Engineering, Inc.
11011 Richmond Avenue, Suite 700
Houston, TX 77042
Tel. (713)270-5700
Texas Registered Survey Firm 10028200

P:\Cadd\2024\24013 - Hatch - COH FY20 Lift Stations\Monument\Bissonnet No. 4 LS\5053-7315.dwg

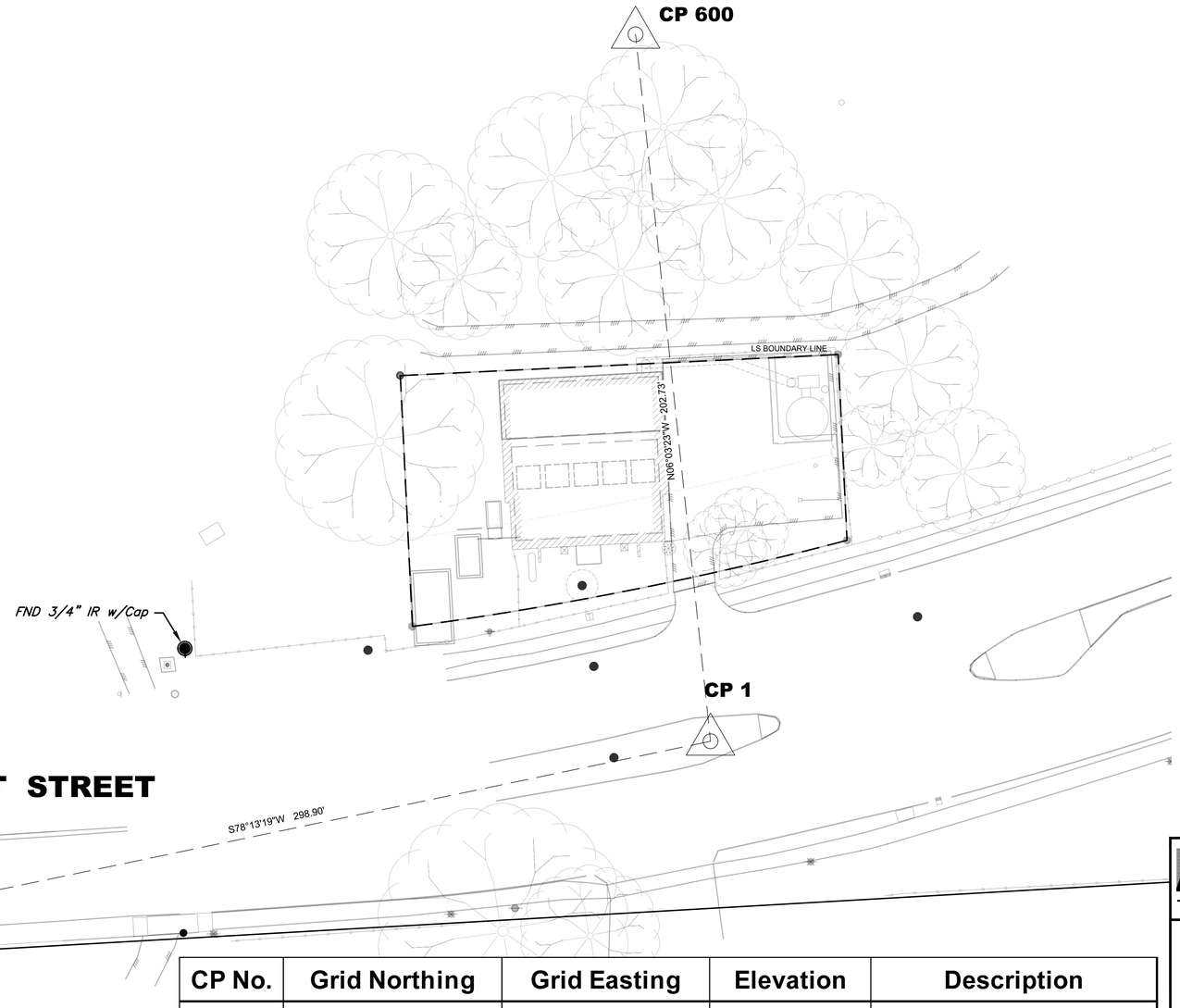

N
20 10 0 20
SCALE IN FEET
22 X 34 : 1" = 20'

NO.	DATE	REVISION	APP.

SURVEY NOTES:

1. ALL BEARINGS AND COORDINATES ARE BASED ON THE TEXAS COORDINATE SYSTEM, SOUTH CENTRAL ZONE (4204) NORTH AMERICAN DATUM OF 1983 (2011 ADJ) 2010 EPOCH, U.S. SURVEY FEET. COORDINATES SHOWN HEREON ARE GRID VALUES AND ALL DISTANCES SHOWN ARE SURFACE VALUES. THE COMBINED SCALE FACTOR IS 0.99988207.
2. GRID COORDINATES/SCALE FACTOR = SURFACE COORDINATES.
3. FIELD DATA COLLECTED OCTOBER 2024.
4. ALL ELEVATIONS SHOWN HEREON ARE REFERENCED TO THE NORTH AMERICAN VERTICAL DATUM OF 1988 (NAVD88) GEOID 18. ALL CONTROL NETWORK ELEVATIONS ARE TIED TO CITY SURVEY 5013-7315 SITE CONTROL MONUMENT USING DIFFERENTIAL LEVELING.
5. THE CONVERSION FACTOR FROM PROJECT LEVELED G18 ELEVATION TO THE HCFCD CALLED G99 ELEVATION =+ 0.32'.
6. ACCORDING TO FEMA'S FLOOD INSURANCE RATE MAP (FIRM) PANEL NO. 48201C0845M. DATED 05/02/2019, A PORTION OF THE SUBJECT PROPERTY LIES WITHIN ZONE AE, FLOODWAY AREA. THE REMAINDER OF THE PROPERTY IS LOCATED IN ZONE A, SPECIAL FLOOD HAZARD AREA (SFHA). APPROXIMATE LIMITS (IF SHOWN) ARE BASED ON AVAILABLE SHAPE FILES PROVIDED BY FEMA. THIS FLOOD STATEMENT IS BASED ON ENGINEERING INFORMATION PROVIDED BY FEMA AND SHALL NOT CREATE LIABILITY ON THE PART OF THE SURVEYOR.

PROJECT BENCH MARK:

A BRASS DISK LOCATED ON THE SOUTH SIDE OF BISSONNET STREET, APPROXIMATELY 700 FEET SOUTHWEST OF S. GESSNER ROAD INTERSECTION. OBSERVED ELEVATION = 65.79' (NAVD 88 GEOID 18) CALLED ELEVATION=66.11' (GEIOD 99 CONUS)

CP No.	Grid Northing	Grid Easting	Elevation	Description
1	13,809,851.77	3,070,329.45	63.02	5/8" Iron Rod w/Cap
600	13,810,053.34	3,070,308.06	62.53	5/8" Iron Rod w/Cap

CP 1 -- 5/8" IRON ROD w/CAP

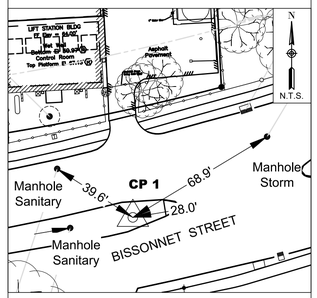

GRID NORTHING : 13,809,851.77
GRID EASTING : 3,070,329.45

CP 600 -- 5/8" IRON ROD w/CAP

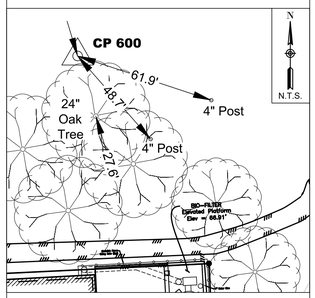

GRID NORTHING : 13,810,053.34
GRID EASTING : 3,070,308.06

N1C15

AMANI ENGINEERING, INC.
11011 RICHMOND AVENUE
SUITE 700
HOUSTON, TEXAS 77024
TEL: (713) 270-5700
TBPE REG. NO. F-4528
TBPELS REG. NO. 1028200

HATCH
750 TOWN & COUNTRY BLVD.
SUITE 650
HOUSTON, TEXAS 77024
P:832-930-7670
TX FIRM NUMBER: F-314

SURVEYED BY:
AMANI ENGINEERING,INC.
FB NO. P-6357

STATE OF TEXAS REGISTERED WILLIAM H. REIMER III 4044 PROFESSIONAL LAND SURVEYOR
William H. Reimer III 06-05-2026

CITY OF HOUSTON
HOUSTON PUBLIC WORKS

LIFT STATION RENEWAL & REPLACEMENT PROJECT
BISSONET #4 LIFT STATION
SURVEY CONTROL MAP

WBS NUMBER	FOR CITY OF HOUSTON USE ONLY
R-000267-0173-4	HOUSTON PUBLIC WORKS ACCEPTED AND FILED 82825 CITY DRAWING NUMBER Approval Date 08/14/26 HOUSTON TX
DRAWING SCALE	
1" = 20'	
CITY OF HOUSTON PM	
NUPUR KRISHNAN P.E. N.K.	
SHEET NO. 85 OF 274	

FILE PATH: P:\Cadd\2024\24013 - Hatch - COH FY20 Lift Stations\CAD_DWG\Survey Control Drawings\Control-Bissonnet No. 4 LS.dwg

0 1 2 3 ORIGINAL SCALE IN INCHES FOR REDUCED PLANS

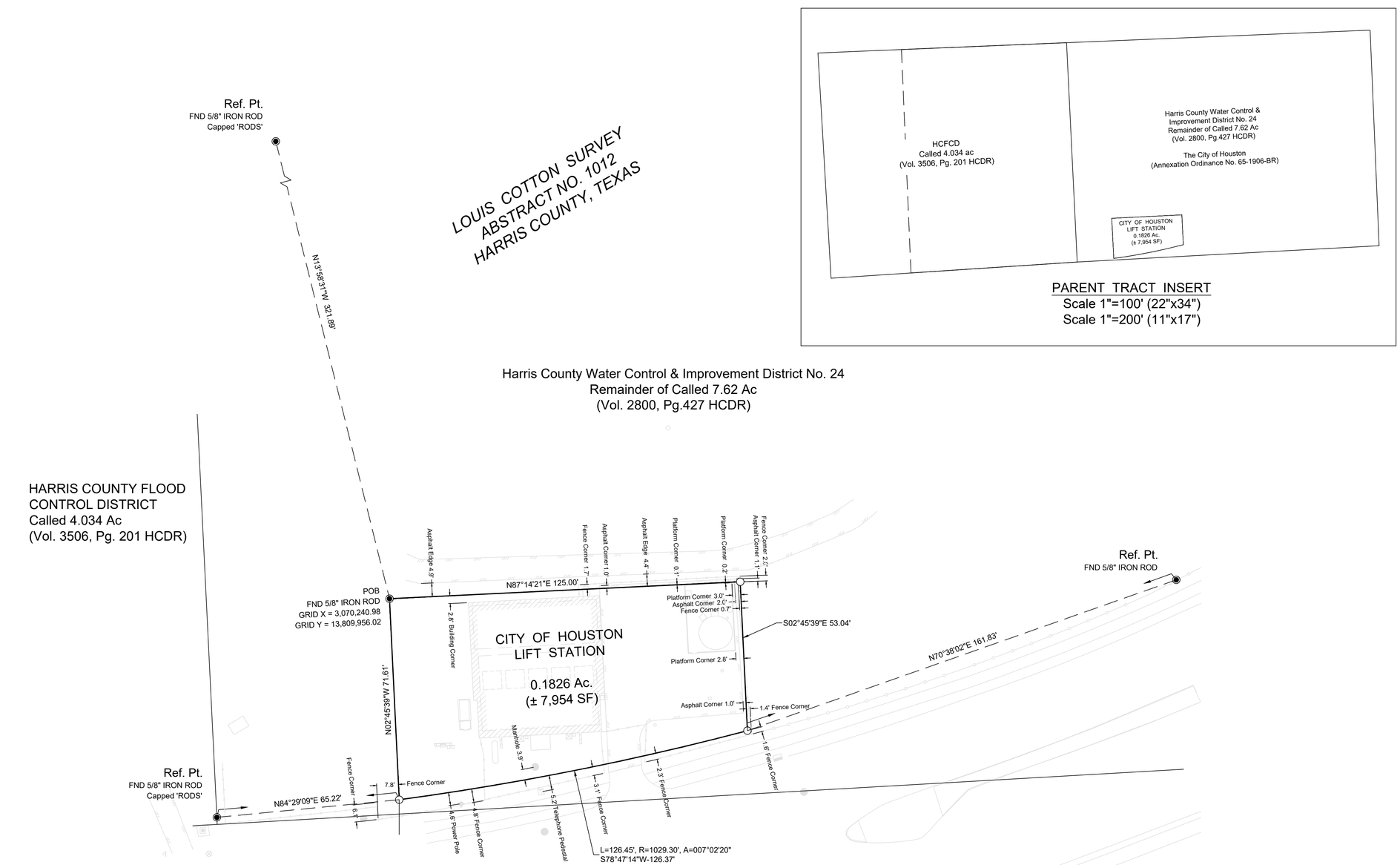

PARENT TRACT INSERT
Scale 1"=100' (22"x34")
Scale 1"=200' (11"x17")

N

20 10 0 20

SCALE IN FEET

1" = 20' (22"x34")
1" = 40' (11"x17")

SYMBOL LEGEND	
◉	FOUND IRON ROD
⊙	FOUND IRON PIPE
⊗	SET 'X' CUT
○	SET 5/8" IRON ROD CAPPED 'AMANI'

LEGEND

CB	CHORD BEARING
CD	CHORD DISTANCE
ESMT	EASEMENT
HCCF	HARRIS COUNTY CLERK FILE
HCDR	HARRIS COUNTY DEED RECORDS
HCMR	HARRIS COUNTY MAP RECORDS
FC	FILM CODE
NO	NUMBER
POB	POINT OF BEGINNING
POC	POINT OF COMMENCEMENT
PROP	PROPOSED
PG	PAGE
ROW	RIGHT OF WAY
SEC	SECTION
VOL	VOLUME
PG	PAGE
WLE	WATER LINE EASEMENT
( )	CALLED DIMENSION
IR	IRON ROD
IP	IRON PIPE
FND	FOUND
AC	ACRE
R	RIGHT

BOUNDARY SURVEY EXHIBIT
CITY OF HOUSTON
BISSONNET LIFT STATION

BOUNDARY SURVEY OF A 0.1826 Ac. (± 7954 SF) TRACT OUT OF THE REMAINDER OF A CALLED 7.62 ACRE TRACT AS RECORDED IN VOL. 2800 PG. 427 HCDR, L. COTTON SURVEY, ABSTRACT NO. 1012, HARRIS COUNTY, TEXAS

NOTES:

1. ALL BEARINGS AND COORDINATES ARE BASED ON THE TEXAS COORDINATE SYSTEM, SOUTH CENTRAL ZONE (4204) NORTH AMERICAN DATUM OF 1983 (2011 ADJ) 2010 EPOCH. COORDINATES SHOWN HEREON ARE GRID VALUES AND ALL DISTANCES SHOWN ARE SURFACE VALUES.THE COMBINED SCALE FACTOR IS 0.99988207.
2. GRID COORDINATES ÷ SCALE FACTOR = SURFACE COORDINATES.
3. HORIZONTAL COORDINATES BASED ON GPS FIELD DATA COLLECTED OCTOBER, 2024.
4. THE SURVEYOR HAS NOT ABSTRACTED THE SUBJECT PROPERTY. ABSTRACT CERTIFICATES WERE PROVIDED BY ABSTRACT SERVICES OF HOUSTON, GF NO. 7910-25-1905 DATED MARCH 20, 2025
5. SURVEY WAS PREPARED WITHOUT BENEFIT OF A CURRENT TITLE COMMITMENT AND MAY NOT SHOW ALL ENCUMBRANCES ON SITE.
7. THE BOUNDARY OF THE LIFT STATION WAS BASED ON CITY OF HOUSTON DRAWING NO. 8544 MAP OF SOUTHWEST AREA PARK, FIRE STATION, SANITARY SEWER EASEMENTS, DATED 6-11-1969.

THIS SURVEY SUBSTANTIALLY COMPLIES WITH THE CURRENT TEXAS SOCIETY OF PROFESSIONAL SURVEYORS MANUAL OF PRACTICE REQUIREMENTS FOR A CATEGORY 1B, CONDITION 2, STANDARD LAND SURVEY.

THE FIELD WORK WAS COMPLETED JUNE 2025.

WILLIAM H. REIMER III
REGISTERED PROFESSIONAL LAND SURVEYOR NO. 4044
AMANI ENGINEERING, INC.
11011 RICHMOND AVE, SUITE 700
HOUSTON, TEXAS 77042
TEL 713.270.5700
TEXAS REGISTERED SURVEYING FIRM No. 100282-00

STATE OF TEXAS
REGISTERED
WILLIAM H. REIMER III
4044
PROFESSIONAL
LAND SURVEYOR

08-22-2025

AMANI ENGINEERING, INC.
11011 RICHMOND AVENUE, SUITE 700
HOUSTON, TEXAS 77042
TEL: (713) 270-5700
Texas Registered Engineering Firm No. F-4528
Texas Registered Surveying Firm No.100282-00

HOUSTON PUBLIC WORKS
ACCEPTED AND FILED
82825
CITY DRAWING NUMBER
Approval Date 08/14/26
HOUSTON TX

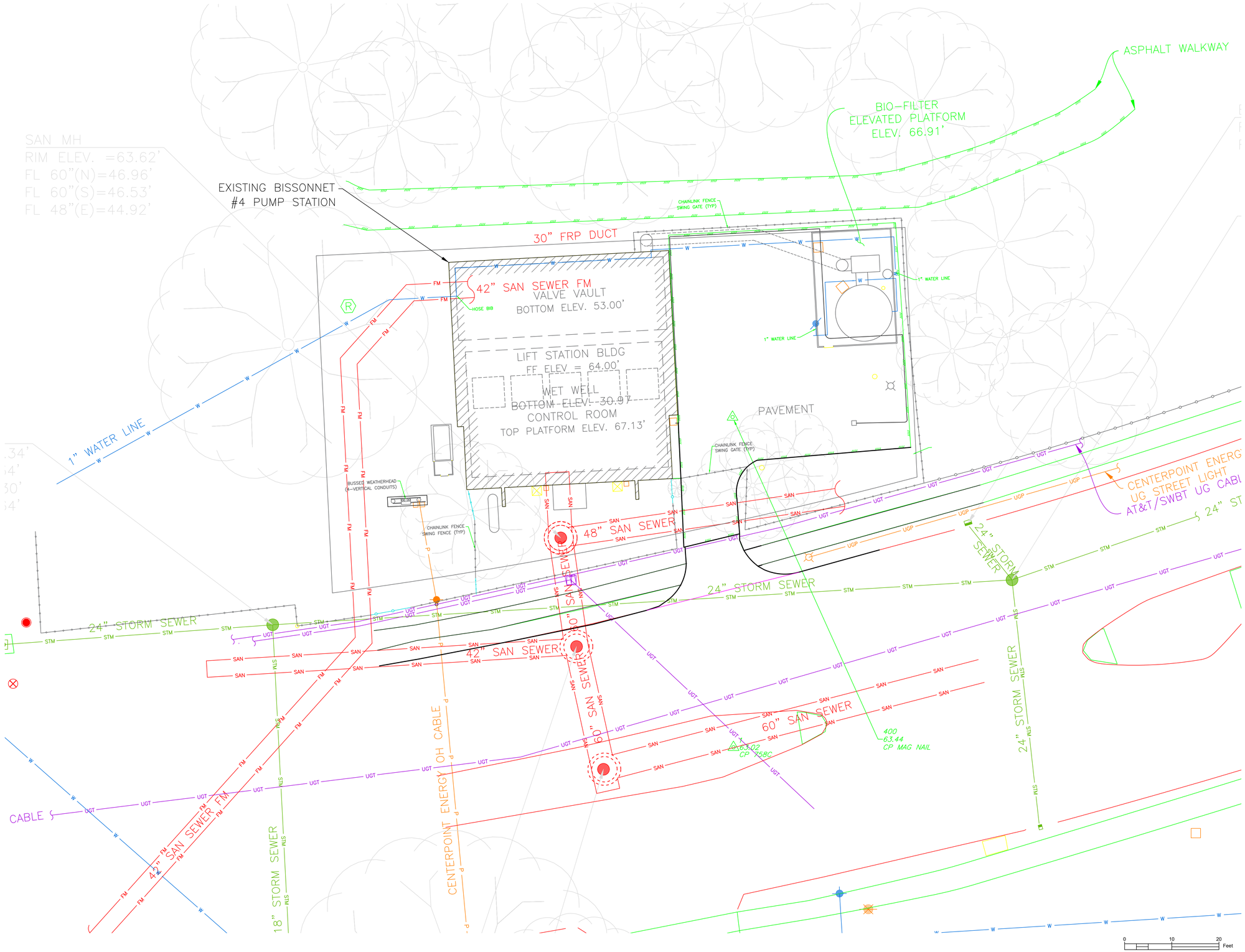

N

NOTE:

1. LS SITE IS LOCATED IN THE 100 YEAR FLOODPLAIN

NO.	DATE	REVISION	APP.

HATCH
750 TOWN & COUNTRY BLVD
SUITE 650
HOUSTON, TX 77024
P: 832-930-7670
TX FIRM NUMBER: F-314

SURVEYED BY:
AMANI ENGINEERING, INC.
FB NO. P-6357

STATE OF TEXAS
MARK G. SCALLY
136279
LICENSED
PROFESSIONAL ENGINEER
2/9/26

CITY OF HOUSTON
HOUSTON PUBLIC WORKS

LIFT STATION RENEWAL & REPLACEMENT PROJECT
BISSONNET #4 LS
EXISTING CIVIL TOPOGRAPHIC PLAN

WBS NUMBER	FOR CITY OF HOUSTON USE ONLY
R-000267-0173-4	HOUSTON PUBLIC WORKS ACCEPTED AND FILED
DRAWING SCALE	82825 CITY DRAWING NUMBER
AS NOTED	Approval Date 08/14/26 HOUSTON TX
CITY OF HOUSTON PM	
NUPUR KRISHNAN P.E. N.K.	
SHEET NO. 87 OF 274	

N1C17

PLOTTED: 5/14/2026 7:21 AM
PLOT STYLE: ----
FILE PATH: \\wusppplot01\d$\Global ProjectWise Plotting - WUS\Queue 1\queue1.dwg

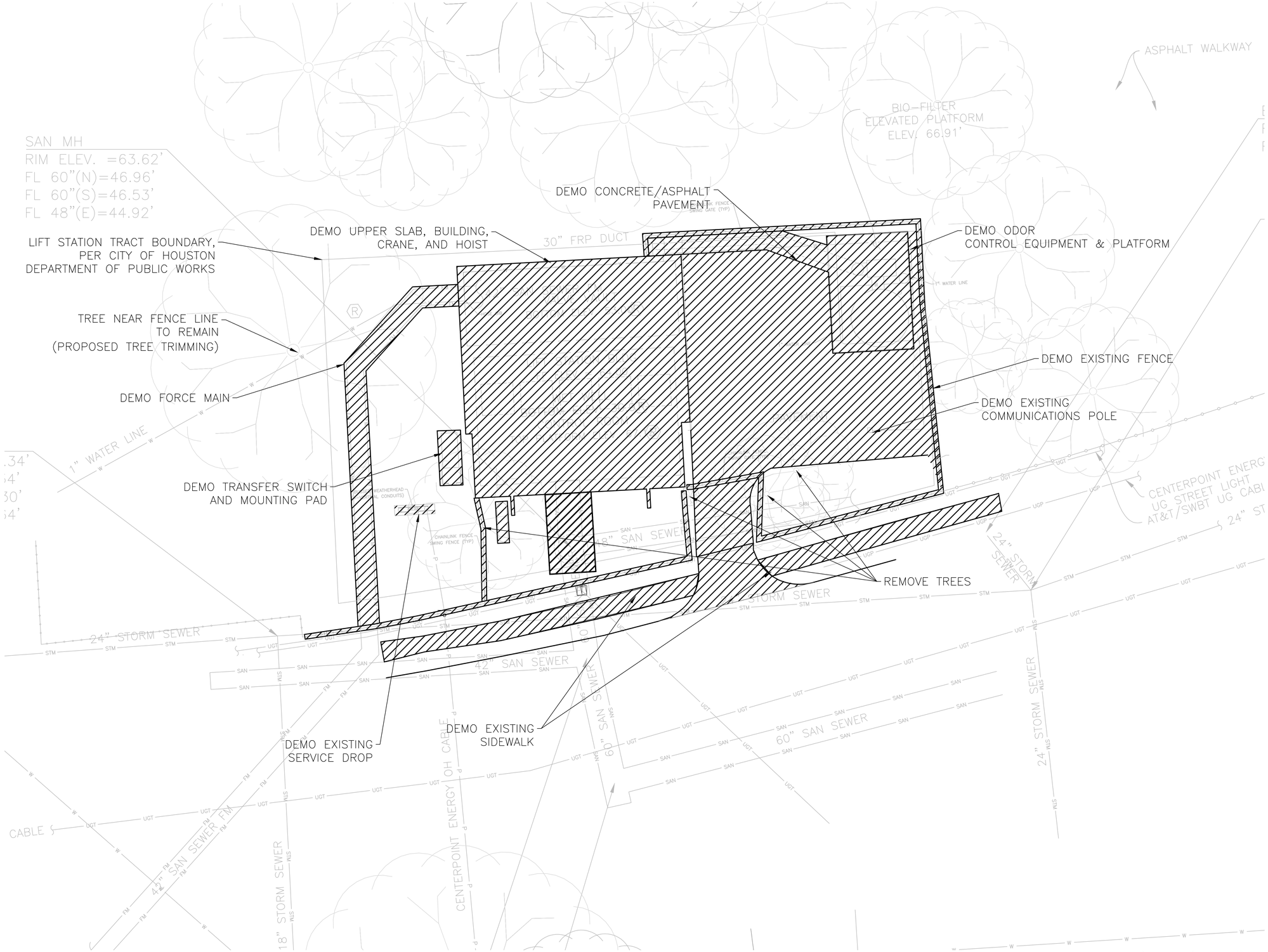

N1C24

N

NO.	DATE	REVISION	APP.

NOTE:

1. DEMO EXISTING SIDEWALK TO THE FIRST EXPANSION JOINTS TO THE NORTH AND SOUTH OF THE EXISTING FENCE ALIGNMENT. LIMITS SHOWN ON DRAWING ARE APROXIMATE.
2. THE CITY SHALL HAVE THE FIRST RIGHT OF REFUSAL TO RETAIN OR SALVAGE ALL ITEMS SHOWN TO BE DEMOLISHED AND/OR REMOVED, INCLUDING BUT NOT LIMITED TO PUMPS, HATCHES AND ELECTRICAL AND INSTRUMENTATION COMPONENTS. PRIOR TO INITIATING DEMOLITION WORK, THE CONTRACTOR AND THE DESIGNATED FIELD INSPECTOR SHALL MAKE A JOINT INSPECTION OF EACH SITE TO IDENTIFY ALL EQUIPMENT TO BE RETAINED BY THE CITY FOR SALVAGE OR REUSE. ITEMS IDENTIFIED FOR SALVAGE REPRESENTATIVE (CAPITAL PROJECTS CONSTRUCTION INSPECTOR) FOR WASTEWATER TREATMENT PLANT SALVAGE AT LEAST 72 HOURS PRIOR TO DEMOLITION IN ORDER TO COORDINATE REMOVAL OF ANY ITEMS THE CITY WISHES TO CLAIM AND SALVAGE. THE CONTRACTOR SHALL DELIVER ALL SALVAGE ITEMS TO A LOCATION WITHIN THE CITY DETERMINED BY THE CITY.

NOTICE:
FOR YOUR SAFETY, YOU ARE REQUIRED BY TEXAS LAW TO CALL 811 AT LEAST 48 HOURS BEFORE YOU DIG SO THAT UNDERGROUND LINES CAN BE MARKED. THIS SIGNATURE DOES NOT FULFILL YOUR OBLIGATION TO CALL 811

VERIFICATION OF PRIVATE UTILITY LINES

Mike Brower — 07/31/26 (Date)

CenterPoint Energy natural gas utilities shown. (Gas service lines are not shown). This signature not be used for conflict verification.

Signature valid for six months.

Mike Brower — 07/31/26 (Date)

CenterPoint Energy/UNDERGROUND Electrical Facilities Verification ONLY. (This signature verifies existing underground facilities – not to be used for conflict verification)

Signature valid for six months.

Marc F Johnson — 7/28/26 (Date)

Approved for AT&T underground conduit facilities only.
Signature valid for one year.

HATCH
750 TOWN & COUNTRY BLVD
SUITE 650
HOUSTON, TX 77024
P: 832-930-7670
TX FIRM NUMBER: F-314

SURVEYED BY:
AMANI ENGINEERING, INC.
FB NO. P-6357

STATE OF TEXAS — MARK G. SCALLY — 136279 — LICENSED PROFESSIONAL ENGINEER — 9/1/26

CITY OF HOUSTON
HOUSTON PUBLIC WORKS

LIFT STATION RENEWAL & REPLACEMENT PROJECT
BISSONNET #4 LS
CIVIL DEMOLITION PLAN

WBS NUMBER
R-000267-0173-4
DRAWING SCALE
AS NOTED
CITY OF HOUSTON PM
NUPUR KRISHNAN P.E. N.K.
SHEET NO. 88 OF 274

FOR CITY OF HOUSTON USE ONLY

HOUSTON PUBLIC WORKS
ACCEPTED AND FILED
82825
CITY DRAWING NUMBER
Approval Date 08/14/26
HOUSTON TX

PLOTTED: 2/5/2026 11:31 AM
PLOT STYLE: Grayscale.ctb
FILE PATH: C:\pwworking\hatch-dpd-south_central_us\dms51138\H374729-0100-221-258-0001.dwg

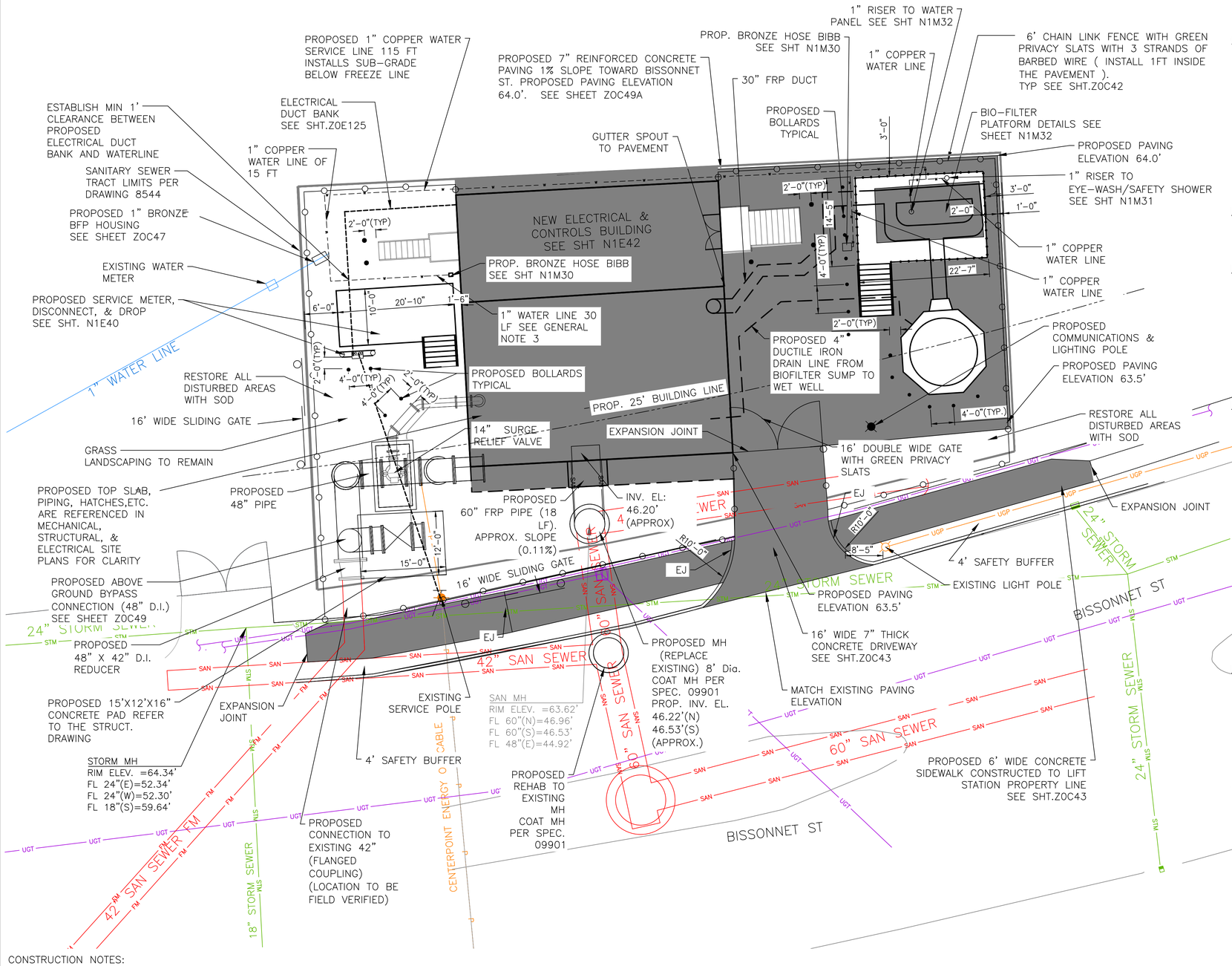

CONSTRUCTION NOTES:

1. CONTRACTOR SHALL BE FULLY RESPONSIBLE FOR ANY DAMAGES TO EXISTING WATER, WASTEWATER, STORMWATER LINES AND TRAFFIC CONTROL DEVICES. ALL DAMAGES SHALL BE IN ACCORDANCE WITH THE "STANDARD CONSTRUCTION SPECIFICATION" REFERENCED AT NO COST TO THE CITY.

2. ADEQUATE DRAINAGE SHALL BE MAINTAINED AT ALL TIMES DURING CONSTRUCTION AND ANY DRAINAGE DITCH OR STRUCTURE DISTURBED DURING CONSTRUCTION SHALL BE RESTORED TO THE SATISFACTION OF THE OWNING AUTHORITY.

3. COAT WET WELL AND SAN MANHOLES IN ACCORDANCE WITH SPEC SECTION 09901

4. CONTRACTOR SHALL TAKE NECESSARY PRECAUTIONS TO PROTECT ROOT SYSTEMS OF SHRUBS, PLANTS, AND TREES ALONG THE AREA OF EXCAVATION.

5. CONTRACTOR SHALL COORDINATE WITH CETERPOINT ENERGY TO DE-ENERGIZE THE LIFT STATION AND OTHER ELECTRICAL EQUIPMENT ON SITE.

6.SANITARY SEWER MANHOLES AND HATCHES INSTALLED BELOW THE FLOODPLAIN ELEVATION SHALL HAVE WATERTIGHT MANHOLE FRAMES AND COVERS OR HATCHES.

7. CONTRACTOR SHALL COMPLY WITH THE LATEST EDITION OF OSHA REGULATIONS AND THE STATE OF TEXAS LAWS CONCERNING EXCAVATION.

8. CONTRACTOR TO COORDINATE LAYDOWN AREA WITH OWNER.

9. CONTRACTOR TO PROVIDE CONSTRUCTION JOINTS ON PROPOSED PAVING AT INTERVALS NO MORE THAN 15' O/C

NOTES:

GENERAL

1. THIS IS A LIFT STATION REHABILITATION PROJECT (REPLACING PIPES, PUMPS, CONCRETE TOP SLAB AND HATCHES, AND ELECTRICAL FACILITIES) UNDER CONSENT DECREE FOR EARLY ACTION COMPLETION.

2. THIS PROPOSED SITE DEVELOPMENT PLAN PROVIDES A GENERAL OVERVIEW OF THE PROPOSED IMPROVEMENTS WITHIN THE SITE. PLEASE REFER TO PROPOSAL SITE PLANS FOR ELECTRICAL, MECHANICAL, AND STRUCTURAL INFORMATION CONTAINED IN THIS DRAWING SET FOR MORE DETAILED INFORMATION.

PLANNING

1. THERE IS A BUILDING SETBACK LINE 25' FROM THE PROPERTY LINE.

PLATTING

1. A SUBDIVISION PLAT FOR THIS LIFT STATION SITE IS NOT REQUIRED BASED ON THE EXEMPTION CONTAINED CITY OF HOUSTON CODE OF ORDINANCES, CHAPTER 42- SUBDIVISIONS, DEVELOPMENTS AND PLATTING, ARTICLE 1.- IN GENERAL, SEC.42-4.(b)(1)-ENFORCEMENT AND PENALTIES, BECAUSE THE CURRENT DEED CONFIGURATION OF THE PROPERTY HAS NOT BEEN REVISED, ALTERED OR SUBDIVIDED AFTER MARCH 15,1963.

FLOODPLAIN

1. LIFT STATION SITE IS WITHIN THE 100-YEAR FLOODPLAIN.

2. EXISTING CONTROL BUILDING AND ENTIRE LS BUILDING WALLS PROPOSED TO BE REMOVED AND REPLACED WITH A RAISED CONTROL BUILDING. 500-YEAR + 3' ELEVATION= 69.3'. ODOR CONTROL UNIT TO BE PLACED ON RAISED PLATFORM AND A PORTION ON A CONCRETE BASE.

3. NO NET FILL IS BEING PROPOSED IN THE FLOODPLAIN. NO FLOODPLAIN MITIGATION IS REQUIRED.

4. DESIGN INTENTIONALLY PROVIDES NEW CONTROL BUILDING AS SAME WIDTH (PERPENDICULAR TO FLOOD PATH) AS EXISTING STRUCTURE TO MEET FLOODPLAIN CONVEYANCE CRITERIA.

5. WATERTIGHT HATCHES ARE PROPOSED FOR LIFT STATION WET WELL.

ELECTRICAL

1. ALL ELECTRICAL FACILITIES ARE DESIGNED TO BE INSTALLED AT OR ABOVE 3' ABOVE THE 500-YEAR FLOOD ELEVATION. INSTALLATION OF ANY ELECTRICAL WIRING OR EQUIPMENT BELOW 3' ABOVE THE 500-YEAR FLOOD ELEVATION MUST CONFIRM TO PROVISIONS OF THE 20223 NATIONAL ELECTRICAL CODE.

STORMWATER

1. DETENTION IS NOT REQUIRED FOR THE WORK PROPOSED BASED ON OFFICE OF CITY ENGINEER MEMO.

2. LIFT STATION TRACT AREA = 9000 SF. EXISTING IMPERVIOUS = 60.8%. INCREASE IN IMPERVIOUS - 90SF.

3. THE PROPOSED WORK WILL NOT CHANGE OR ADD ANY SHEET FLOW TO ADJACENT PROPRIETIES. SINCE SHEET FLOW DOES NOT CHANGE.

4. DETENTION NOT REQUIRED FOR THE IMPERVIOUS AREA RESULTING FROM THE PROPOSED SITE DISTURBANCE FOR THE LIFT STATION REHAB. SHEET FLOW IS A REASONABLE METHOD FOR STORMWATER DRAINAGE AT THIS SITE.

LEGEND :

PROPOSED FENCE LINE

PROPOSED CONCRETE PAVING EXTENTS

PROPOSED BOLLARDS (2' FROM NEAREST STRUCTURE 4' FROM EACH OTHER)(TYP)

N

0 10 20 Feet

a. Drainage analysis:
Additional Impervious = 90SF
A = 90 SF = 0.002066 AC
C = 0.95
tc = 5 min
IDF Paramaters (2-year): b=48.35, d=9.07, e=-0.7244
Rain Fall Intensity = i=7.09 in/hr
Q = CxAxi = 0.0139 CFS
The existing 24" RCP Storm Sewer has adequate capacity to accept the nominal additional flow.

b. Protection of Adjacent Lots:
Grading elevation do not change from existing.
No sheet flow resulting from the proposed plan will or shall impact adjacent properties.

NOTICE:
FOR YOUR SAFETY, YOU ARE REQUIRED BY TEXAS LAW TO CALL 811 AT LEAST 48 HOURS BEFORE YOU DIG SO THAT UNDERGROUND LINES CAN BE MARKED. THIS SIGNATURE DOES NOT FULFILL YOUR OBLIGATION TO CALL 811

VERIFICATION OF PRIVATE UTILITY LINES

Mike Brower 07/31/26
Date

CenterPoint Energy natural gas utilities shown. (Gas service lines are not shown). This signature not be used for conflict verification.
Signature valid for six months.

Mike Brower 07/31/26
Date

CenterPoint Energy/UNDERGROUND Electrical Facilities Verification ONLY. (This signature verifies existing underground facilities - not to be used for conflict verification)
Signature valid for six months.

Marc F Johnson 7/28/26
Date

Approved for AT&T underground conduit facilities only.
Signature valid for one year.

FCM Engineers, PC
3300 S. Gessner Rd. Suite 249
Houston, Texas 77063
T- 713-706-4412
F- 713-706-4410
Tx Firm No. 13481

HATCH
750 TOWN & COUNTRY BLVD
SUITE 650
HOUSTON, TX 77024
P: 832-930-7670
TX FIRM NUMBER: F-314

SURVEYED BY:
AMANI ENGINEERING, INC
FB NO. P-6357

STATE OF TEXAS
FRANK C. MBACHU
108363
LICENSED
PROFESSIONAL ENGINEER
7/14/2026

CITY OF HOUSTON
HOUSTON PUBLIC WORKS

LIFT STATION RENEWAL & REPLACEMENT PROJECT
BISSONNET #4 LIFT STATION PROPOSED CIVIL SITE DEVELOPMENT PLAN

WBS NUMBER	R-000267-0173-4
DRAWING SCALE	1"=10'
CITY OF HOUSTON PM	NUPUR KRISHNAN P.E. N.K.
SHEET NO.	89 OF 274

FOR CITY OF HOUSTON USE ONLY

HOUSTON PUBLIC WORKS
ACCEPTED AND FILED
82825
CITY DRAWING NUMBER
Approval Date 08/14/26
HOUSTON TX

N1C19

NO.	DATE	REVISION	APP.

PLOTTED: 8/25/2026 12:07 PM
FILE PATH: Y:\2022071 LIFT STATIONS RENEWAL AND REPLACEMENT (HATCH) WBS NO. R-000267-0173-3\Auto CAD\Site Plan 90%\Bissonnet #4 - Site PLan\BISSONNET#4 Site Plan - 48.dwg

N

NO.	DATE	REVISION	APP.

0 40 80 Feet

N1C20

HATCH
750 TOWN & COUNTRY BLVD
SUITE 650
HOUSTON, TX 77024
P: 832-930-7670
TX FIRM NUMBER: F-314

SURVEYED BY:
FB NO. 000000

STATE OF TEXAS
MARK G. SCALLY
136278
LICENSED
PROFESSIONAL ENGINEER
8/14/26

CITY OF HOUSTON
HOUSTON PUBLIC WORKS

LIFT STATION RENEWAL & REPLACEMENT PROJECT
BISSONNET #4 LS
TRAFFIC CONTROL PLAN

WBS NUMBER
R-000267-0173-4
DRAWING SCALE
AS NOTED
CITY OF HOUSTON PM
NUPUR KRISHNAN, P.E. N.K.
SHEET NO. 90 OF 274

FOR CITY OF HOUSTON USE ONLY

HOUSTON PUBLIC WORKS
ACCEPTED AND FILED
82825
CITY DRAWING NUMBER
Approval Date 08/14/26
HOUSTON TX

PLOT STYLE: Grayscale.ctb PLOTTED: 2/2/2026 9:21 AM

FILE PATH: C:\pwworking\hatch-dpd-south_central_us\dms51143\H374729-0100-220-271-0001.dwg

FILE PATH: Y:\2022071 LIFT STATIONS RENEWAL AND REPLACEMENT (HATCH) WBS NO. R-000267-0173-3\Auto CAD\New SWPPP\Bissonnet #4\BASE-Bissonnet#4LS.dwg
PLOT STYLE: Grayscale.ctb
PLOTTED: 6/5/2026 8:54 AM

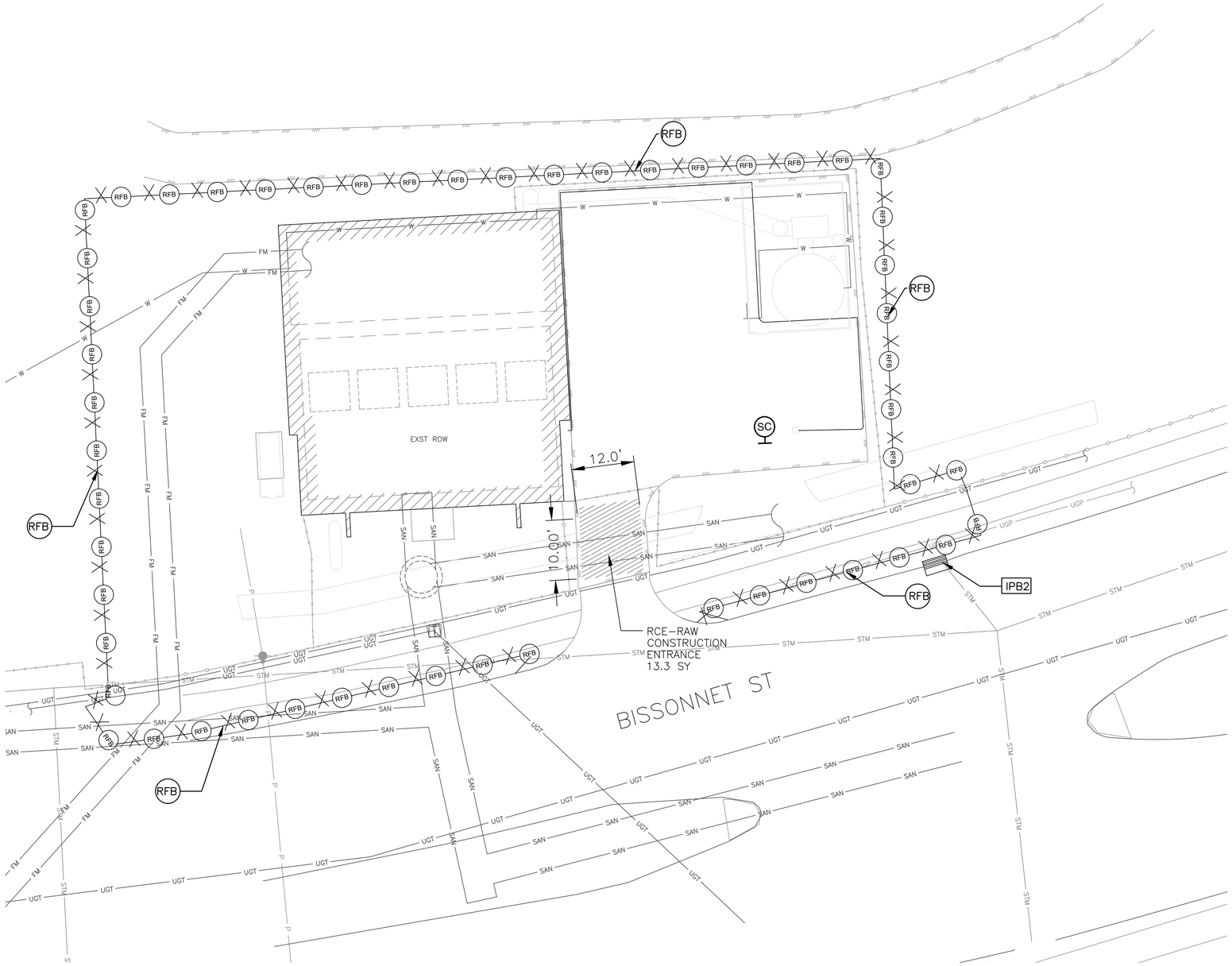

N

0 10 20 Feet

NO.	DATE	REVISION	APP.

LEGEND :

RFB — REINFORCED FILTER FABRIC BARRIER.

IPB2 — INLET PROTECTION BARRIER.

SC — STABILIZED CONSTRUCTION ACCESS

NOTES:

1. STORM WATER POLLUTION PLAN CONFORM TO SPECIFICATIONS AND DRAWINGS.
2. ALL DISTURBED AREAS THAT ARE NOT PAVED OR COVERED BY STRUCTURE SHALL BE SODDED OR HYDROMULCH SEEDED.
3. CONTRACTOR'S LAY DOWN/STORAGE AREA SHALL HAVE A STABILIZED CONSTRUCTION EXIT.
4. SEE SHEET Z0G06 FOR STORM WATER POLLUTION PREVENTION PLAN NOTES AND DETAILS.
5. CONTRACTOR SHALL PROVIDE A STABILIZED CONSTRUCTION EXIT, INCLUDING TRUCK WASHING AREA, VERIFIED IN THE FIELD AND AUTHORIZED BY ENGINEER.

FCM Engineers, PC
3300 S. Gessner Rd.
Suite 249
T- 713-706-4412
F- 713-706-4410
Tx Firm No. 13481

HATCH
750 TOWN & COUNTRY BLVD
SUITE 650
HOUSTON, TX 77024
P: 832-930-7670
TX FIRM NUMBER: F-314

SURVEYED BY:
AMANI ENGINEERING, INC
FB NO. P-6357

STATE OF TEXAS
FRANK C. MBACHU
108383
LICENSED
PROFESSIONAL ENGINEER
5/23/2026

CITY OF HOUSTON
HOUSTON PUBLIC WORKS

LIFT STATION RENEWAL & REPLACEMENT PROJECT
BISSONNET #4 LIFT STATION
CIVIL SWPPP

WBS NUMBER
R-000267-0173-4
DRAWING SCALE
AS NOTED
CITY OF HOUSTON PM
NUPUR KRISHNAN P.E. N.K.

FOR CITY OF HOUSTON USE ONLY

HOUSTON PUBLIC WORKS
ACCEPTED AND FILED
82825
CITY DRAWING NUMBER
Approval Date 09/14/26
HOUSTON TX

N1C21

PLOT STYLE: Monochrome.ctb PLOTTED: 7/27/2026 5:28 AM

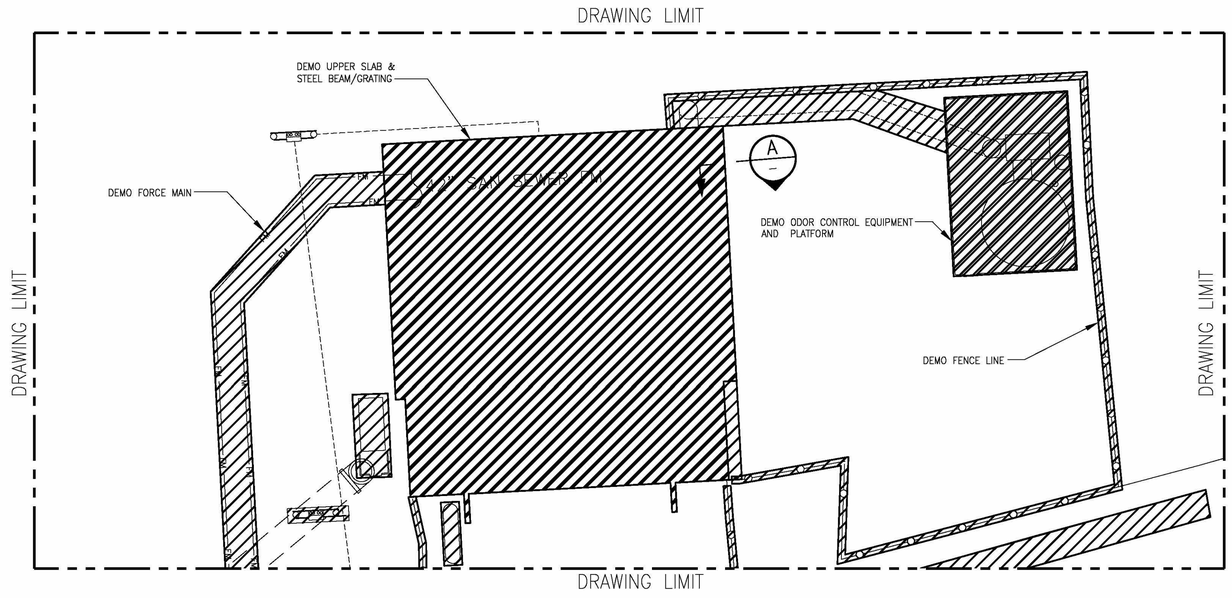

DEMOLITION PLAN
SCALE: 1" = 10'-0"

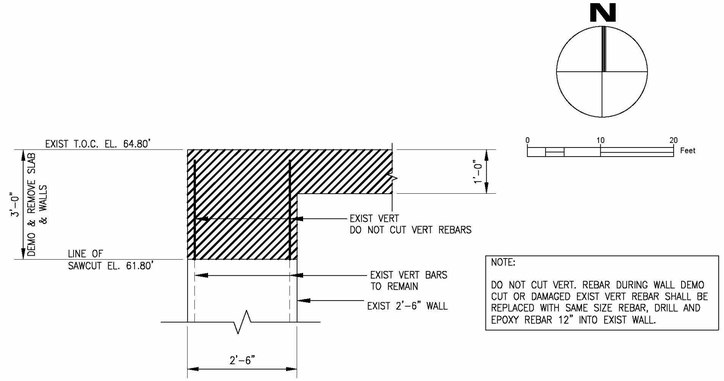

NOTE:

DO NOT CUT VERT. REBAR DURING WALL DEMO. CUT OR DAMAGED EXIST VERT REBAR SHALL BE REPLACED WITH SAME SIZE REBAR, DRILL AND EPOXY REBAR 12" INTO EXIST WALL.

A: TYPICAL DEMO SECTION
SCALE: N.T.S

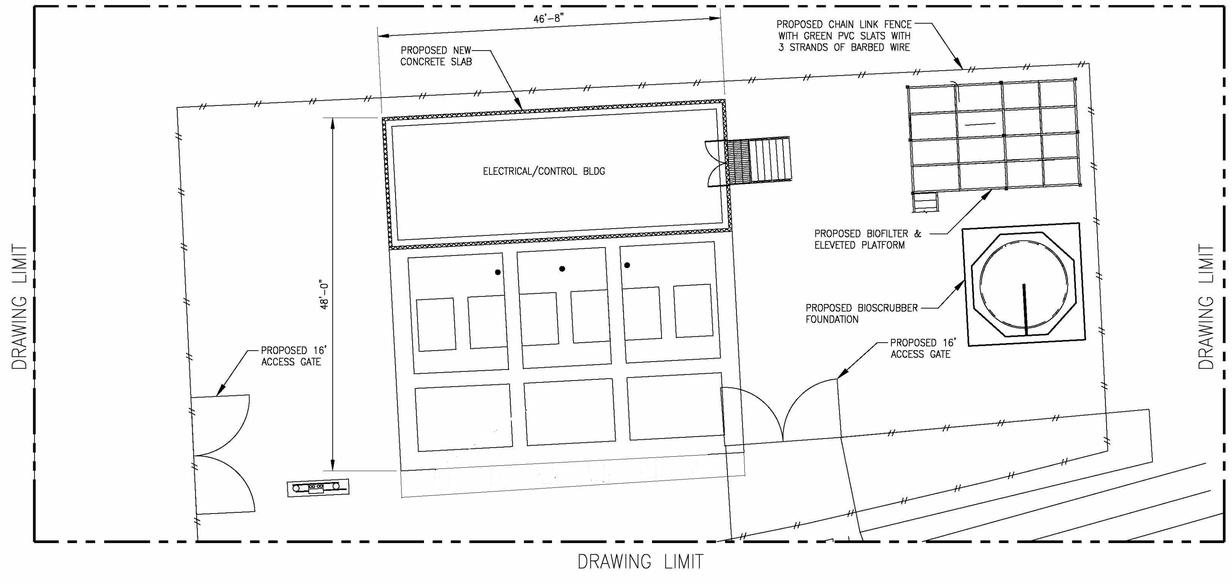

PLAN
SCALE: 1" = 10'-0"

NOTE:

THE CITY SHALL HAVE THE FIRST RIGHT OF REFUSAL TO RETAIN OR SALVAGE ALL ITEMS SHOWN TO BE DEMOLISHED AND/OR REMOVED, INCLUDING BUT NOT LIMITED TO PUMPS, HATCHES, AND ELECTRICAL AND INSTRUMENTATION COMPONENTS. PRIOR TO INITIATING DEMO WORK, THE CONTRACTOR AND THE DESIGNATED FIELD INSPECTOR SHALL MAKE A JOINT INSPECTION OF EACH TO IDENTIFY ALL EQUIPMENT TO BE RETAINED BY THE CITY FOR SALVAGE AND REUSE. ITEMS IDENTIFIED FOR SALVAGE SHALL BE CAREFULLY REMOVED TO PROTECT FROM DAMAGE. ALL OTHER ITEMS SHOWN TO BE DEMOLISHED / REMOVED THAT ARE NOT RETAINED BY THE CITY SHALL BE PROPERLY REMOVED FROM THE SITE AND HANDLED PER SPECIFICATIONS AT NO ADDITIONAL COST TO THE CITY. CONTACT CITY DESIGNATED CITY REPRESENTATIVE FOR WASTEWATER TREATMENT PLANT SALVAGE AT LEAST 72 HOURS PRIOR TO DEMOLITION IN ORDER TO COORDINATE REMOVAL OF ANY ITEMS THE CITY WISHES TO CLAIM AND SALVAGE. THE CONTRACTOR SHALL DELIVER ALL SALVAGE ITEMS TO A LOCATION WITHIN THE CITY DETERMINED BY THE CITY.

NO.	DATE	REVISION	APP.

FCM Engineers, PC
3300 S. Gessner Rd.
Suite 249
T- 713-706-4412
F- 713-706-4410
Tx Firm No. 13481

HATCH
750 TOWN & COUNTRY BLVD
SUITE 650
HOUSTON, TX 77024
P: 832-930-7670
TX FIRM NUMBER: F-314

STATE OF TEXAS — CHARLES C.A. MGBEIKE — 73307 — LICENSED PROFESSIONAL ENGINEER — 05/19/26

SURVEYED BY:
AMANI ENGINEERING, INC
FB NO. P-6357

CITY OF HOUSTON
HOUSTON PUBLIC WORKS

LIFT STATION RENEWAL & REPLACEMENT PROJECT
BISSONNET #4 LIFT STATION PROPOSED DEMOLITION & STRUCTURAL PLAN

WBS NUMBER	FOR CITY OF HOUSTON USE ONLY
R-000267-0173-4	HOUSTON PUBLIC WORKS ACCEPTED AND FILED 82825 CITY DRAWING NUMBER Approval Date 08/14/26 HOUSTON TX
DRAWING SCALE	
AS NOTED	
CITY OF HOUSTON PM	
NUPUR KRISHNAN P.E. N.K.	
SHEET NO. 92 OF 274	

N1S06

FILE PATH: C:\Users\francis.ineagwara\Desktop\FOI\Lift Station\CAD\MBK\Bissonnet\FINAL\Bissonnet Demo & Const.dwg

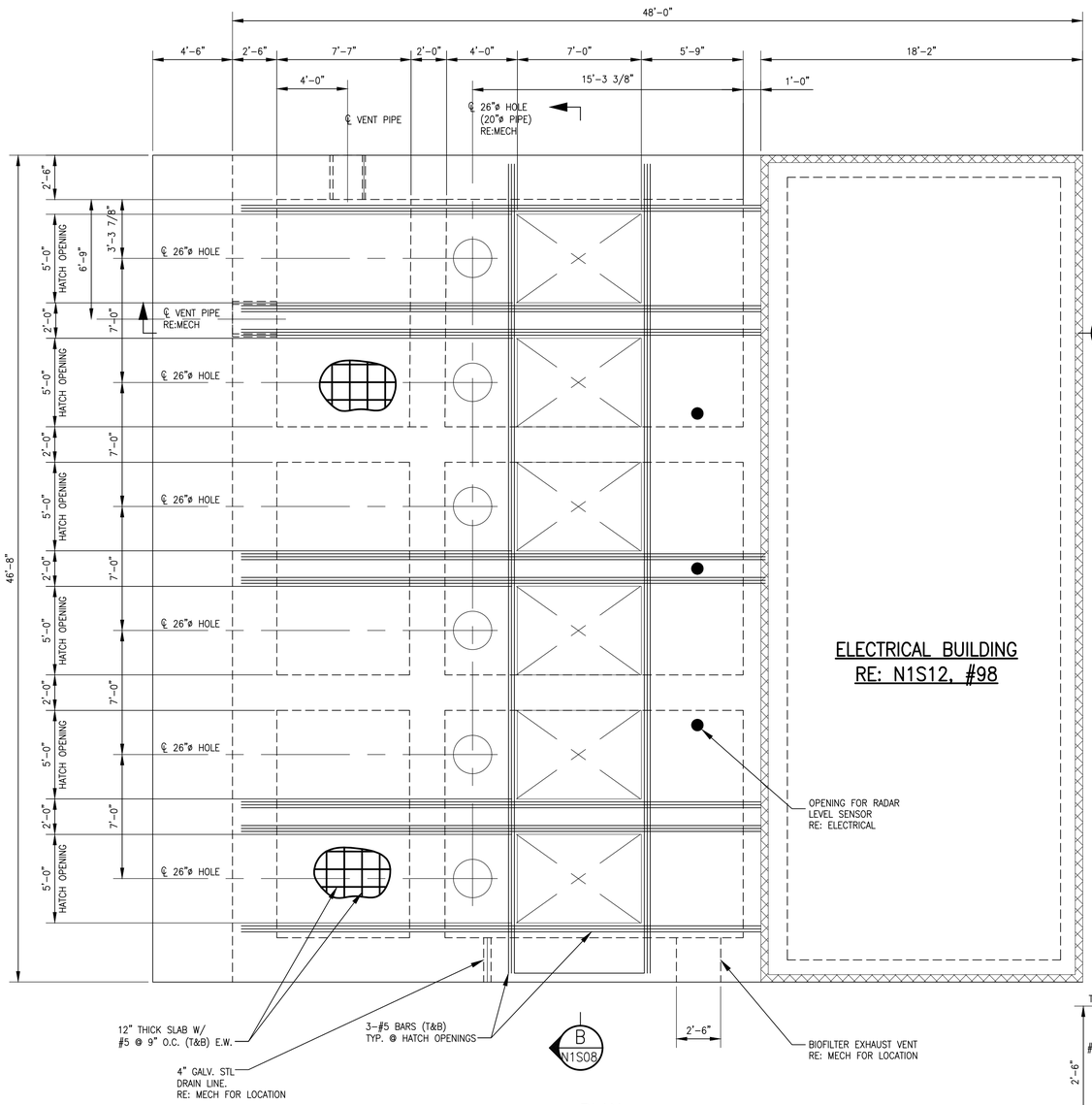

PLAN
LIFT STATION TOP SLAB
SCALE: 1/4" = 1'-0"

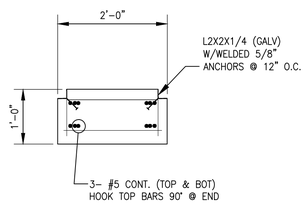

DETAIL 1
SCALE: 3/4" = 1'-0" N1S08

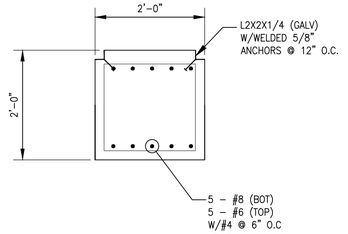

DETAIL 2
SCALE: 3/4" = 1'-0" N1S08

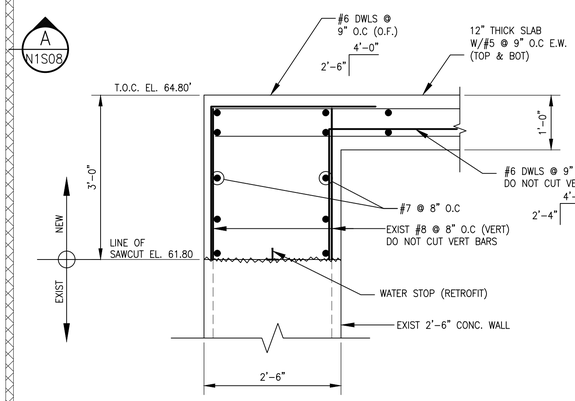

DETAIL 3
SCALE: 3/4" = 1'-0" –

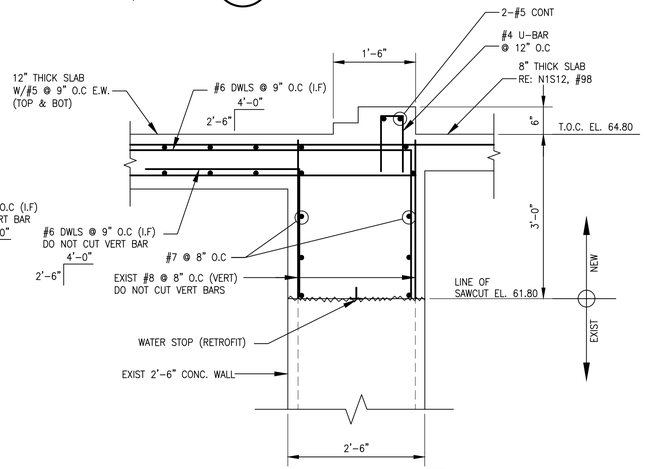

DETAIL 4
SCALE: 3/4" = 1'-0" –

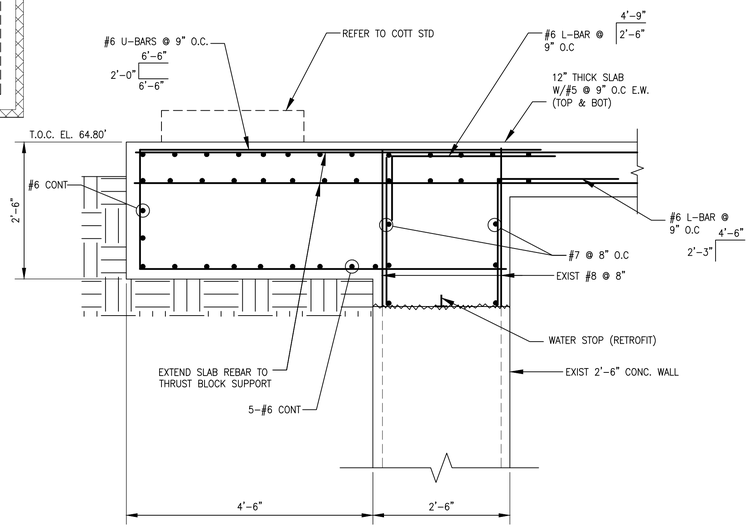

DETAIL 5
SCALE: 3/4" = 1'-0" –

NOTE:

1. REFER TO SHEET ZOS21 FOR STRUCTURAL GENERAL NOTES
2. REFER TO MECHANICAL/VENDOR DRAWINGS FOR WATERPROOF HATCHES/MANHOLES HATCHES SHALL BE SIZED PER PUMP MANUFACTURER AND SHALL BE FLUSHED WITH THE PROPOSED TOP SLAB
3. CONTRACTOR SHALL FIELD VERIFY AND COORDINATE ALL DIMENSION W/MEP & CIVIL PLANS PRIOR TO BIDDING WORK.
4. REFER TO ELECTRICAL FOR RADAR LEVEL SENSOR OPENINGS & MECHANICAL DRAWING FOR OTHER PIPE PENETRATIONS, CONDUITS, VENTS ETC.
5. REFER TO SPECS 09901 FOR WET WELL WALL CLEANING & COATING SPECS.
6. REFER TO COH STD DETAILS ZOS22, 23, 24, 25, 26.

NO.	DATE	REVISION	APP.

FCM Engineers, PC
3300 S. Gessner Rd.
Suite 249
T- 713-706-4412
F- 713-706-4410
Tx Firm No. 13481

HATCH
750 TOWN & COUNTRY BLVD
SUITE 650
HOUSTON, TX 77024
P: 832-930-7670
TX FIRM NUMBER: F-314

SURVEYED BY:
AMANI ENGINEERING, INC
FB NO. P-6357

STATE OF TEXAS
CHARLES C.A. MGBEIKE
73307
LICENSED PROFESSIONAL ENGINEER
05/19/26

CITY OF HOUSTON
HOUSTON PUBLIC WORKS

LIFT STATION RENEWAL & REPLACEMENT PROJECT
BISSONNET #4 LIFT STATION
PROPOSED STRUCTURAL PLAN & DETAILS

WBS NUMBER	FOR CITY OF HOUSTON USE ONLY
R-000267-0173-4	HOUSTON PUBLIC WORKS ACCEPTED AND FILED
DRAWING SCALE	82825 CITY DRAWING NUMBER
AS NOTED	Approval Date 08/14/26 HOUSTON TX
CITY OF HOUSTON PM	
NUPUR KRISHNAN P.E. N.K.	
N1S07	SHEET NO. 93 OF 274

PLOTTED: 8/10/2026 8:16 PM
PLOT STYLE: Monochrome.ctb
FILE PATH: C:\Users\francis.iheagwara\Desktop\FOI\Lift Station\CAD\MBK\Bissonnet\FINAL\New Bissonnet Slab Details .dwg

PLOT STYLE: Monochrome.ctb PLOTTED: 7/27/2026 5:31 AM

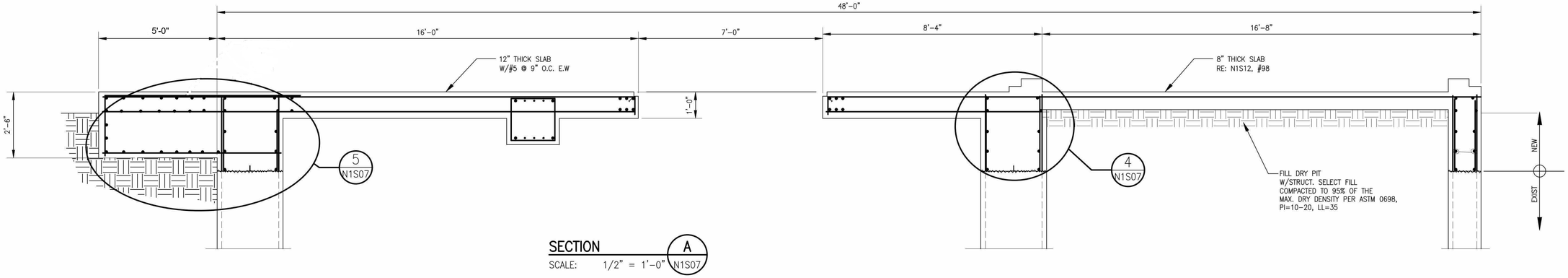

SECTION A
SCALE: 1/2" = 1'-0" N1S07

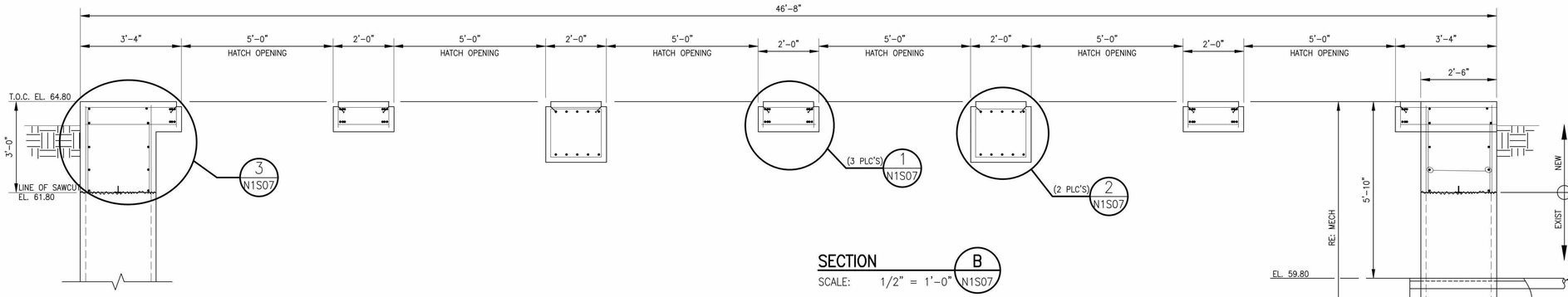

SECTION B
SCALE: 1/2" = 1'-0" N1S07

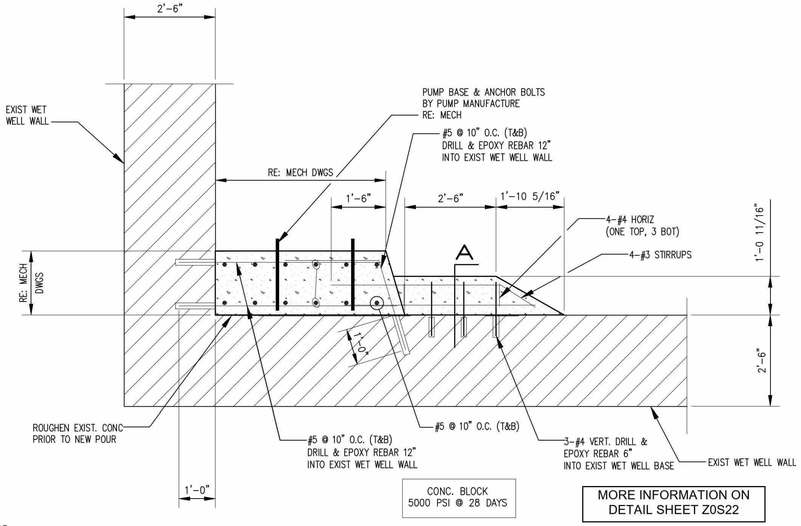

CONC. BLOCK
5000 PSI @ 28 DAYS

MORE INFORMATION ON
DETAIL SHEET Z0S22

SMALL PUMP BASE SHOULD BE FORMED WITH HIGH STRENGTH EPOXY GROUT.

PUMP BASE DETAIL
SCALE: 1/2" = 1'-0"

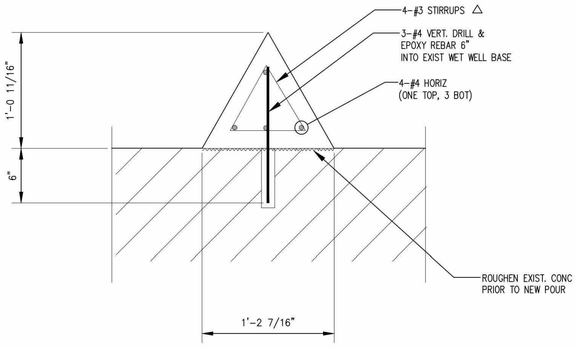

"DETAIL A"
SCALE: 1 1/2" = 1'-0"

NOTE:

1. REFER TO SHEET Z0S21 FOR STRUCTURAL GENERAL NOTES
2. REFER TO MECHANICAL/VENDOR DRAWINGS FOR WATERPROOF HATCHES/MANHOLES HATCHES SHALL BE SIZED PER PUMP MANUFACTURER AND SHALL BE FLUSHED WITH THE PROPOSED TOP SLAB
3. CONTRACTOR SHALL FIELD VERIFY AND COORDINATE ALL DIMENSION W/MEP & CIVIL PLANS PRIOR TO BIDDING WORK.
4. REFER TO ELECTRICAL FOR RADAR LEVEL SENSOR OPENINGS & MECHANICAL DRAWING FOR OTHER PIPE PENETRATIONS, CONDUITS, VENTS ETC.
5. REFER TO SPECS 09901 FOR WET WELL WALL CLEANING & COATING SPECS.
6. REFER TO COH STD DETAILS Z0S22, 23, 24, 25, 26.

NO.	DATE	REVISION	APP.

FCM Engineers, PC
3300 S. Gessner Rd.
Suite 249
T- 713-706-4412
F- 713-706-4410
Tx Firm No. 13481

HATCH
750 TOWN & COUNTRY BLVD
SUITE 650
HOUSTON, TX 77024
P: 832-930-7670
TX FIRM NUMBER: F-314

SURVEYED BY:
AMANI ENGINEERING, INC
FB NO. P-6357

STATE OF TEXAS
CHARLES C.A. MGBEIKE
73307
LICENSED PROFESSIONAL ENGINEER
05/19/26

CITY OF HOUSTON
HOUSTON PUBLIC WORKS

LIFT STATION RENEWAL & REPLACEMENT PROJECT
BISSONNET #4 LIFT STATION PROPOSED STRUCTURAL SECTIONS & PUMP BASE DETAIL

WBS NUMBER	FOR CITY OF HOUSTON USE ONLY
R-000267-0173-4	HOUSTON PUBLIC WORKS ACCEPTED AND FILED
DRAWING SCALE	82825 CITY DRAWING NUMBER
AS NOTED	Approval Date 08/14/26 HOUSTON TX
CITY OF HOUSTON PM	
NUPUR KRISHNAN P.E. N.K.	

N1S08 SHEET NO. 94 OF 274

FILE PATH: C:\Users\francis.iheagwara\Desktop\FOI\Lift Station\CAD\MBK\Bissonnet\FINAL\New Bissonnet Slab Details .dwg

PLOT STYLE: Monochrome.ctb PLOTTED: 8/7/2026 12:21 PM
FILE PATH: C:\Users\francis.iheagwara\Desktop\FO\Lift Station\CAD\MBK\Bissonnet\FINAL\BIO-FILTER PLATFORM_FDN .dwg

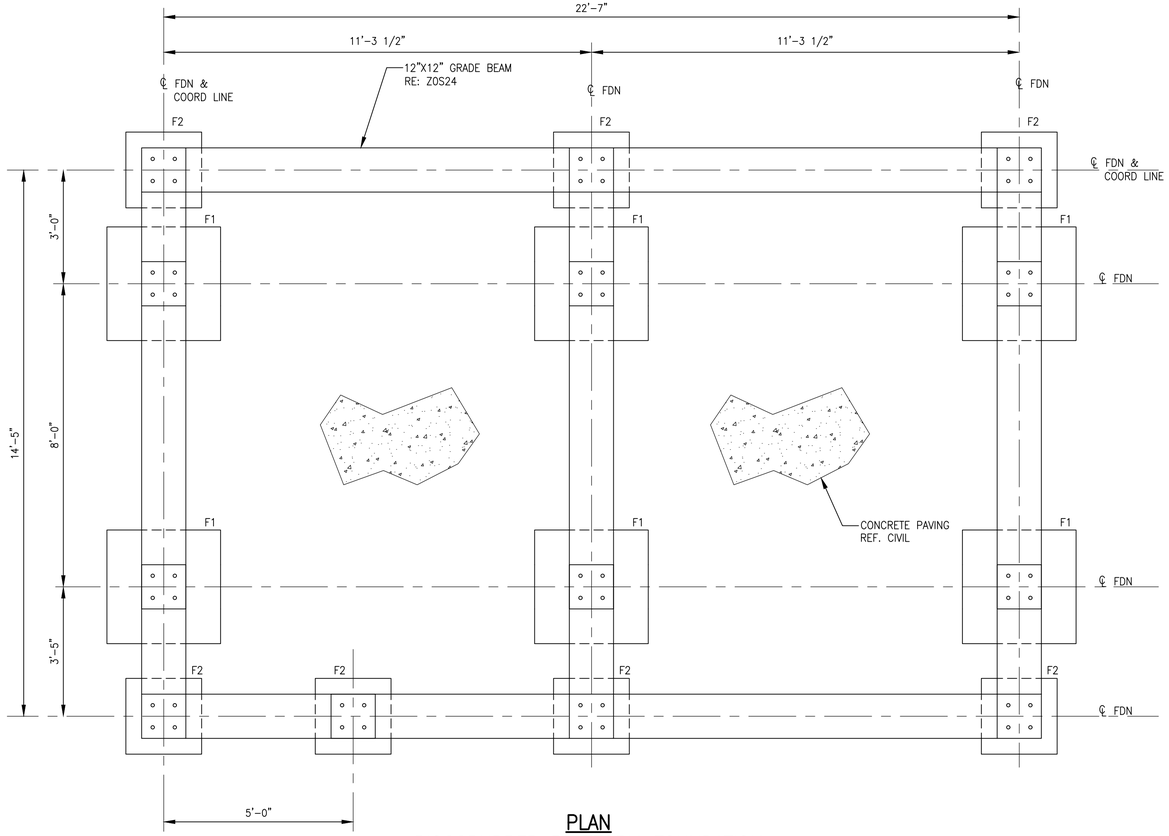

PLAN
BIOSCRUBBER PLATFORM FOUNDATION
SCALE: 1/2" = 1'-0"

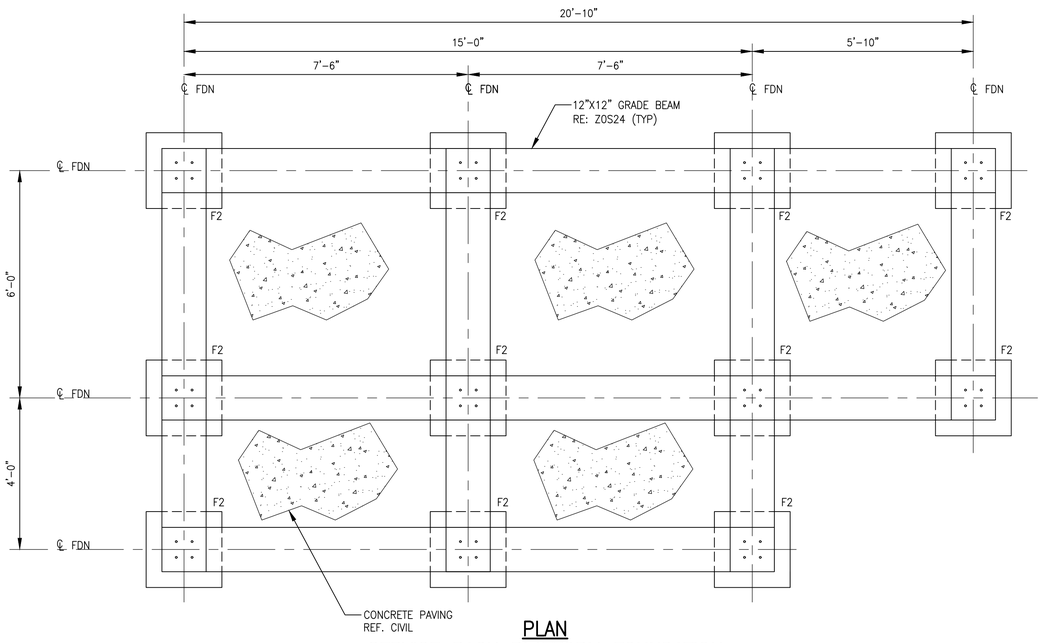

PLAN
SERVICE RACK PLATFORM FOUNDATION
SCALE: 1/2" = 1'-0"

NOTE:

1. REFER TO SHEET ZOS21 FOR STRUCTURAL GENERAL NOTES
2. CONTRACTOR SHALL FIELD VERIFY AND COORDINATE ALL DIMENSIONS W/MEP & CIVIL PLANS PRIOR TO BIDDING WORK.
3. REFER TO COH STD DETAILS ZOS22, 23, 24, 25, 26.
4. ALL STRUCTURAL STEEL SHALL BE HOT DIPPED GALV.

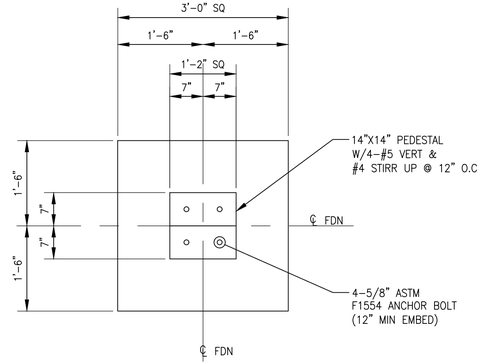

TYPICAL F1 FOUNDATION
SCALE: 3/4" = 1'-0"

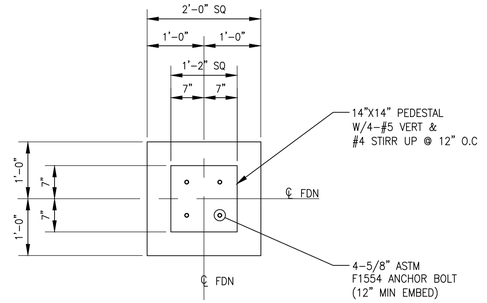

TYPICAL F2 FOUNDATION
SCALE: 3/4" = 1'-0"

NO.	DATE	REVISION	APP.

FCM Engineers, PC
3300 S. Gessner Rd.
Suite 249
T- 713-706-4412
F- 713-706-4410
Tx Firm No. 13481

HATCH
750 TOWN & COUNTRY BLVD
SUITE 650
HOUSTON, TX 77024
P: 832-930-7670
TX FIRM NUMBER: F-314

STATE OF TEXAS
CHARLES C.A. MGBEIKE
73307
LICENSED PROFESSIONAL ENGINEER
05/19/26

SURVEYED BY:
AMANI ENGINEERING, INC
FB NO. P-6357

CITY OF HOUSTON
HOUSTON PUBLIC WORKS

LIFT STATION RENEWAL & REPLACEMENT PROJECT
BISSONNET #4 LIFT STATION
PROPOSED BIO-FILTER PLATFORM FOUNDATION PLANS & SECTIONS

WBS NUMBER
R-000267-0173-4
DRAWING SCALE
AS NOTED
CITY OF HOUSTON PM
NUPUR KRISHNAN P.E. N.K.

FOR CITY OF HOUSTON USE ONLY

HOUSTON PUBLIC WORKS
ACCEPTED AND FILED
82825
CITY DRAWING NUMBER
Approval Date 08/14/26
HOUSTON TX

N1S09 SHEET NO. 95 OF 274

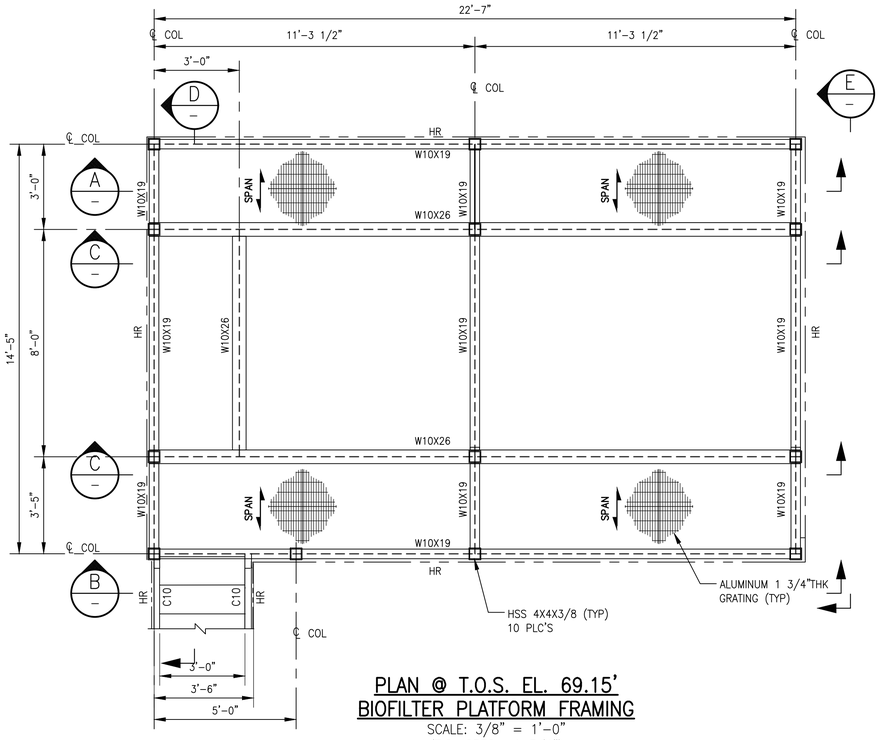

PLAN @ T.O.S. EL. 69.15'
BIOFILTER PLATFORM FRAMING

SCALE: 3/8" = 1'-0"
(T.O. GRTG +1 3/4")

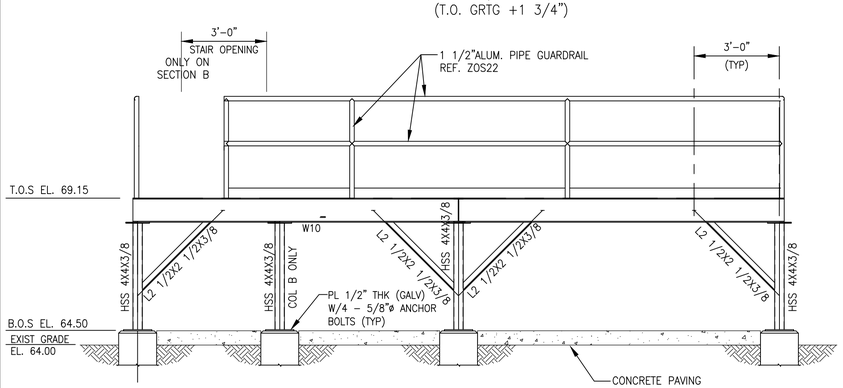

SECTION A B

SCALE: 3/8"=1'-0"

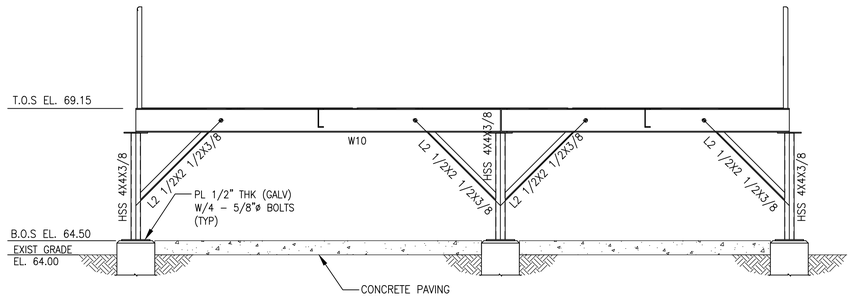

SECTION C

SCALE: 3/8"=1'-0"

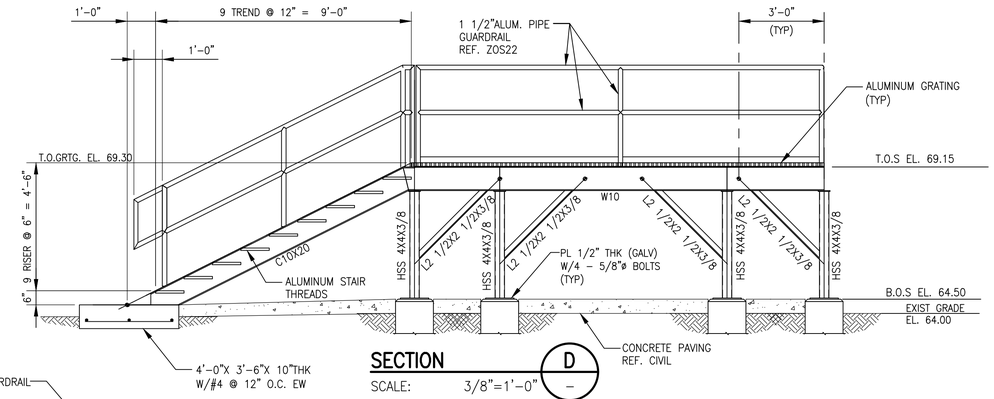

SECTION D

SCALE: 3/8"=1'-0"

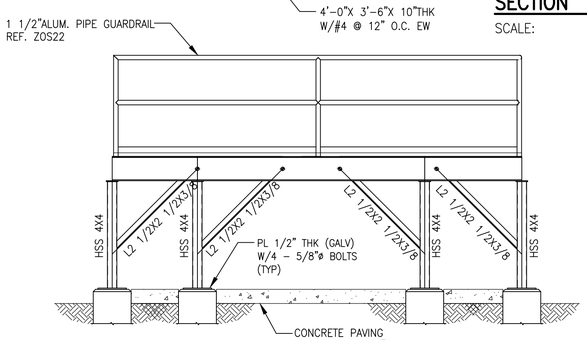

SECTION E

SCALE: 3/8"=1'-0"

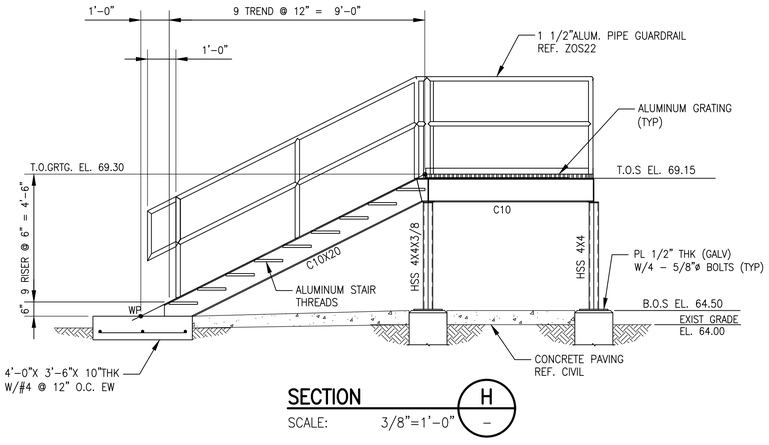

SECTION H

SCALE: 3/8"=1'-0"

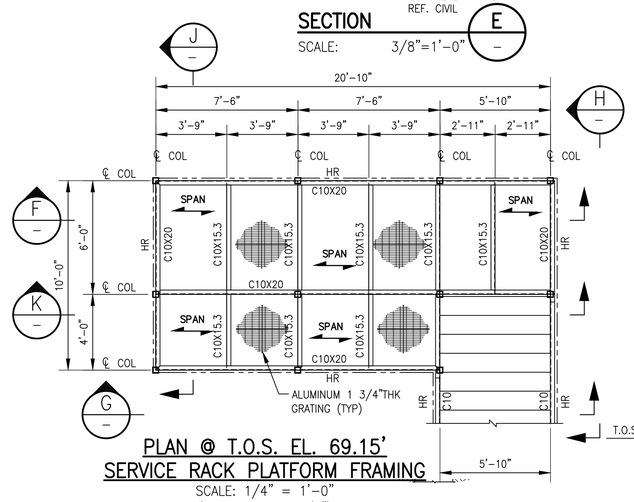

PLAN @ T.O.S. EL. 69.15'
SERVICE RACK PLATFORM FRAMING

SCALE: 1/4" = 1'-0"
(T.O. GRTG +1 3/4")

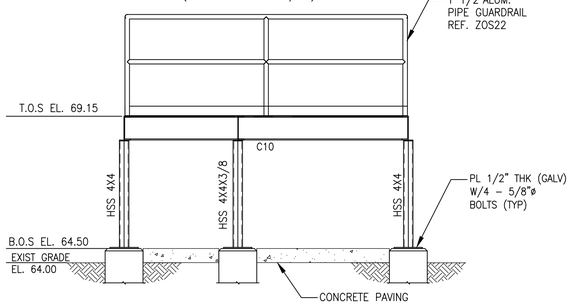

SECTION J

SCALE: 3/8"=1'-0"

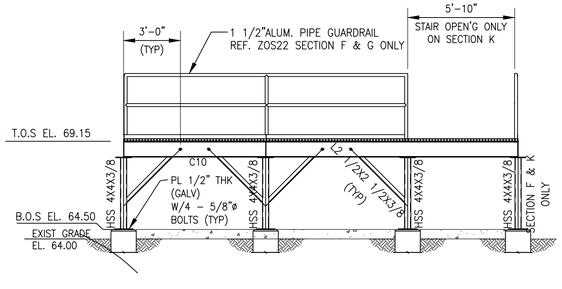

SECTION F G K

SCALE: 1/4"=1'-0"

NOTE:

1. REFER TO SHEET ZOS21 FOR STRUCTURAL GENERAL NOTES
2. CONTRACTOR SHALL FIELD VERIFY AND COORDINATE ALL DIMENSIONS W/MEP & CIVIL PLANS PRIOR TO BIDDING WORK.
3. REFER TO COH STD DETAILS ZOS22, 23, 24, 25, 26.
4. ALL STRUCTURAL STEEL SHALL BE HOT DIPPED GALV.
5. ALL ALUM SHALL BE POWDER COATED DARK GREEN PER ZOS21.
6. ALL GRATING SHALL BE ALUMINUM.

NO.	DATE	REVISION	APP.

FCM Engineers, PC
3300 S. Gessner Rd.
Suite 249
T- 713-706-4412
F- 713-706-4410
Tx Firm No. 13481

HATCH
750 TOWN & COUNTRY BLVD
SUITE 650
HOUSTON, TX 77024
P: 832-930-7670
TX FIRM NUMBER: F-314

STATE OF TEXAS
CHARLES C.A. MGBEKE
73307
LICENSED PROFESSIONAL ENGINEER
05/19/26

SURVEYED BY:
AMANI ENGINEERING, INC
FB NO. P-6357

CITY OF HOUSTON
HOUSTON PUBLIC WORKS

LIFT STATION RENEWAL & REPLACEMENT PROJECT
BISSONNET #4 LIFT STATION
PROPOSED BIO-FILTER PLATFORM STEEL PLANS & SECTIONS

WBS NUMBER	FOR CITY OF HOUSTON USE ONLY
R-000267-0173-4	HOUSTON PUBLIC WORKS ACCEPTED AND FILED 82825 CITY DRAWING NUMBER Approval Date 08/14/26 HOUSTON TX
DRAWING SCALE	
AS NOTED	
CITY OF HOUSTON PM	
NUPUR KRISHNAN P.E. N.K.	
Z1S10	SHEET NO. 96 OF 274

PLOT STYLE: Monochrome.ctb PLOTTED: 8/7/2026 12:24 PM

FILE PATH: C:\Users\francis.iheagwara\Desktop\FOI\Lift Station\CAD\MBK\Bissonnet\FINAL\BIO-FILTER PLATFORM_DETAILS.dwg

PLOT STYLE: Monochrome.ctb PLOTTED: 7/27/2026 5:35 AM

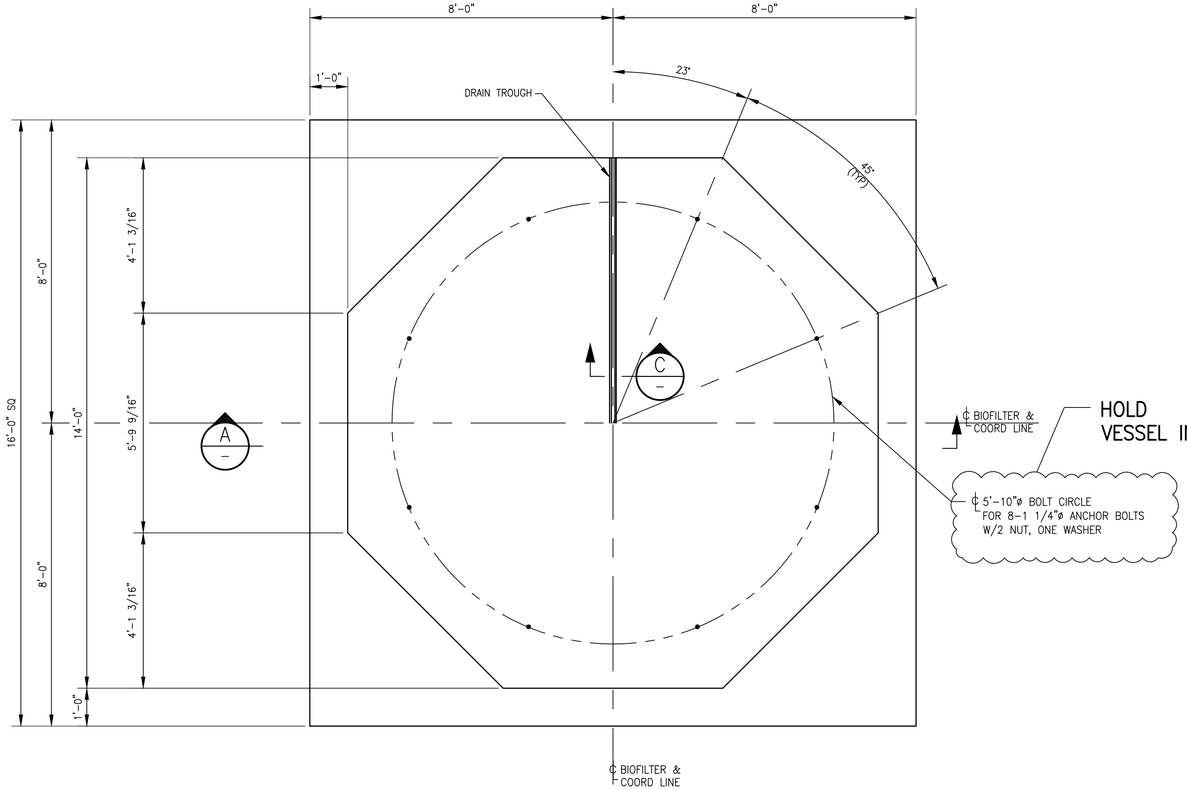

PLAN
BIOFILTER FOUNDATION
SCALE: 1/2" = 1'-0"

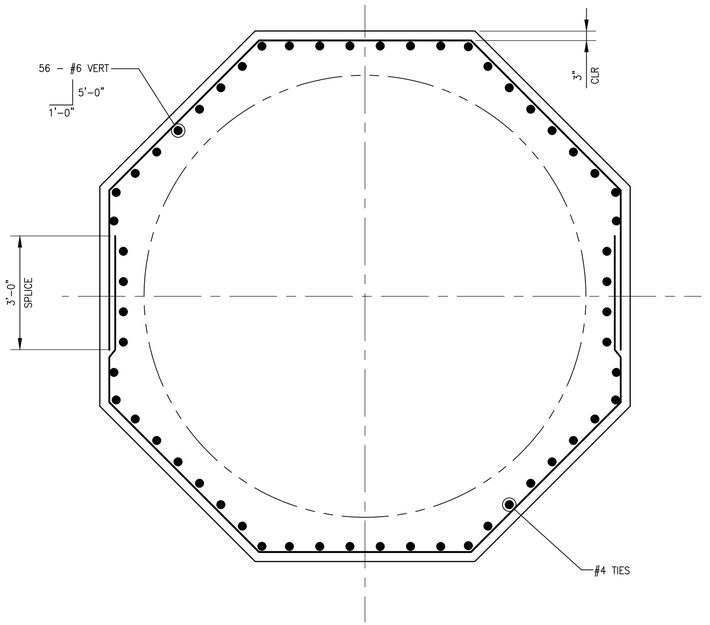

SECTION B
SCALE: 1/2" = 1'-0"

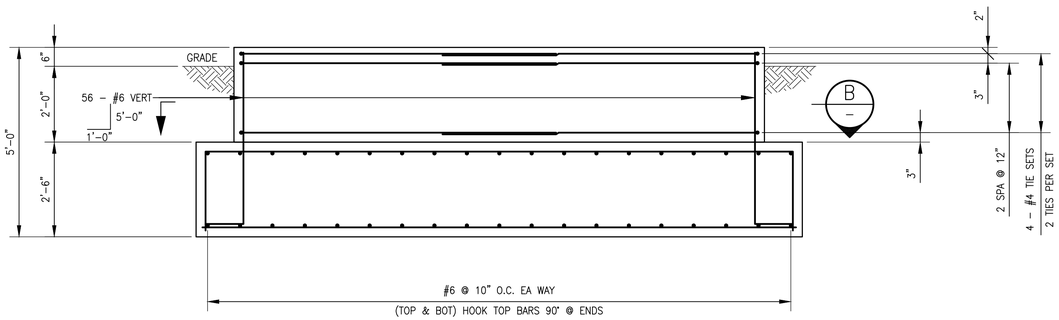

SECTION A
SCALE: 1/2" = 1'-0"

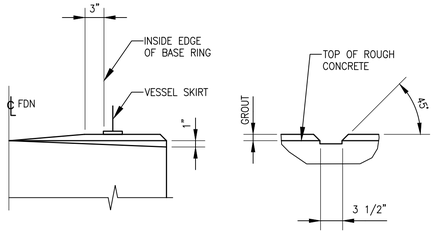

DRAIN DETAIL
SECTION C
SCALE: 1" = 1'-0"

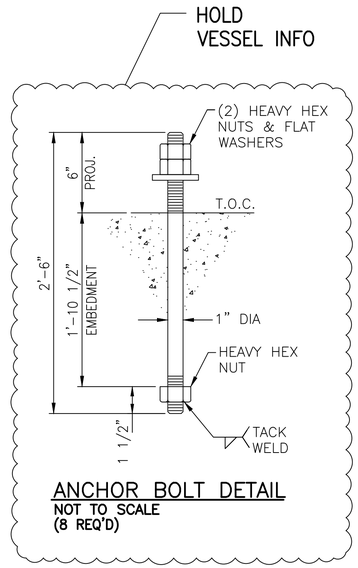

ANCHOR BOLT DETAIL
NOT TO SCALE
(8 REQ'D)

NOTE:

1. REFER TO SHEET ZOS21 FOR STRUCTURAL GENERAL NOTES
2. CONTRACTOR SHALL FIELD VERIFY AND COORDINATE ALL DIMENSIONS W/MEP & CIVIL PLANS PRIOR TO BIDDING WORK.
3. REFER TO COH STD DETAILS ZOS22, 23, 24, 25, 26.
4. ALL STRUCTURAL STEEL SHALL BE HOT DIPPED GALV.

NO.	DATE	REVISION	APP.

FCM Engineers, PC
3300 S. Gessner Rd. Suite 249
T- 713-706-4412
F- 713-706-4410
Tx Firm No. 13481

HATCH
750 TOWN & COUNTRY BLVD
SUITE 650
HOUSTON, TX 77024
P: 832-930-7670
TX FIRM NUMBER: F-314

SURVEYED BY:
AMANI ENGINEERING, INC
FB NO. P-6357

STATE OF TEXAS — CHARLES C.A. MGBEIKE — 73307 — LICENSED PROFESSIONAL ENGINEER — 05/19/26

CITY OF HOUSTON
HOUSTON PUBLIC WORKS

LIFT STATION RENEWAL & REPLACEMENT PROJECT
BISSONNET #4 LIFT STATION
PROPOSED BIO-FILTER PLATFORM FOUNDATION PLANS & SECTIONS

WBS NUMBER	R-000267-0173-4
DRAWING SCALE	AS NOTED
CITY OF HOUSTON PM	NUPUR KRISHNAN P.E. N.K.

FOR CITY OF HOUSTON USE ONLY

HOUSTON PUBLIC WORKS
ACCEPTED AND FILED
82825
CITY DRAWING NUMBER
Approval Date 08/14/26
HOUSTON TX

N1S10A SHEET NO. 96A OF 274

FILE PATH: C:\Users\francis.ineagwara\Desktop\FOI\Lift Station\CAD\MBK\Bissonnet\FINAL\BIO-FILTER_FDN.dwg

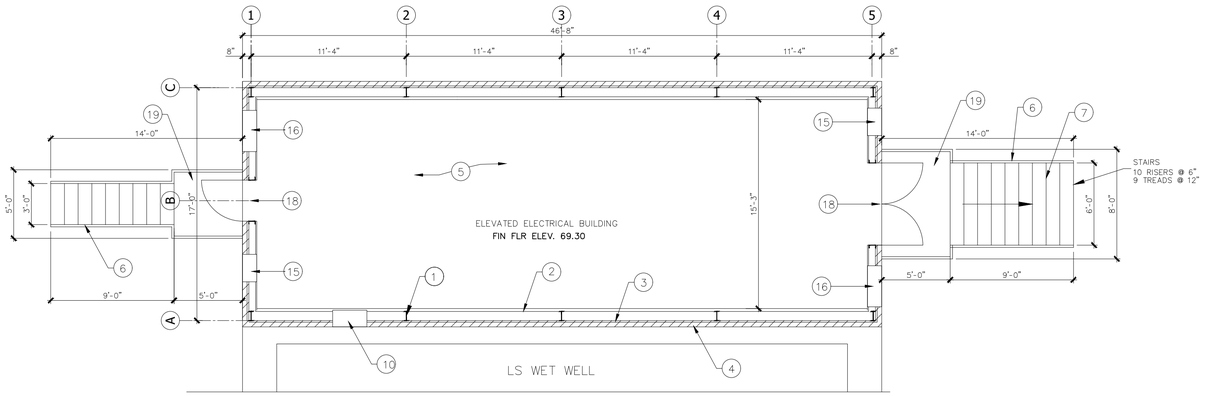

1.0 ARCH. FLOOR PLAN @ 69.30

SCALE: 1/4" = 1'-0"

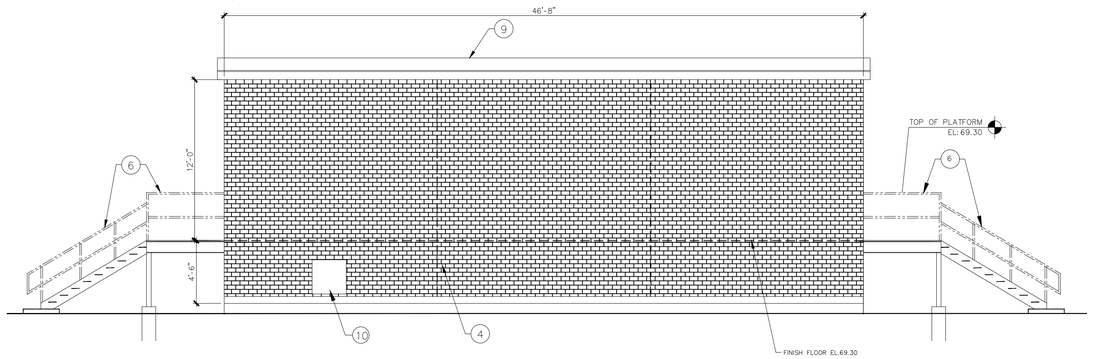

3.0 LEFT & RIGHT ELEVATIONS

SCALE: 1/4" = 1'-0"

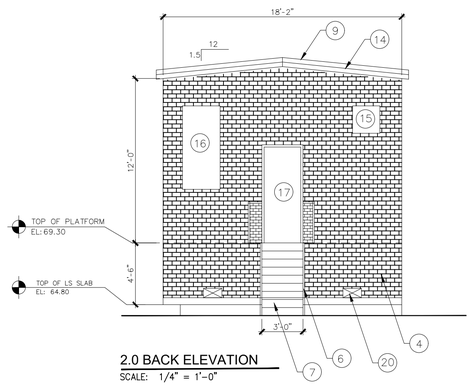

2.0 BACK ELEVATION

SCALE: 1/4" = 1'-0"

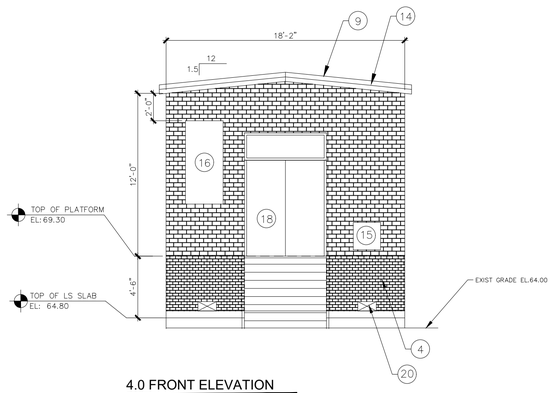

4.0 FRONT ELEVATION

SCALE: 1/4" = 1'-0"

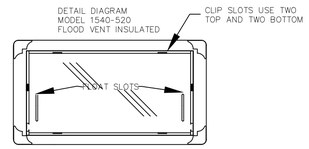

FRONT VIEW

SCALE: NTS

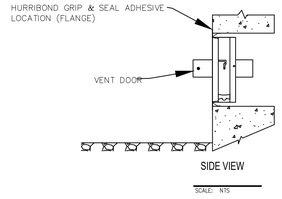

SIDE VIEW

SCALE: NTS

SMART VENT
877-441-8368
WWW.SMARTVENT.COM

SMART VENT FOUNDATION FLOOD VENTS
430 ANDORO DR. UNIT 1
PITMAN, NJ. 08071

FLOOD VENT INSULATED
MODEL 1540-520

SIZE	DWG NO.	REV
A	1540-520	9
DATE 6-21-16	SHEET 1 OF 2	

INSTALLATION INSTRUCTIONS

1. REMOVE VENT DOOR FROM VENT FRAME. (TURN UPSIDE DOWN, ROTATE BOTTOM OF DOOR OUTWARD AND SLIDE OUT)
2. PREPARE A CLEAN 16.25" WIDE BY 8.25" HIGH ROUGH OPENING (APPROX. 1 BLOCK WIDE X 1 BLOCK HIGH) FOR EACH VENT.ENSURE THE BOTTOM OF THE ROUGH OPENING IS NO MORE THAN12" ABOVE THE FINISHED GRADE.
3. APPLY A BEAD OF HURRIBOND GRIP & SEAL OR EQUIVALENT ADHESIVE AROUND THE BACK OF THE FLANGE ON THE VENT FRAME. (FIG. 2)
4. INSERT INSTALLATION CLIPS INTO THE TWO SLOTS ON THE TOP AND TWO SLOTS ON THE BOTTOM OF THE FRAME.
5. THE SPRING ARM OF THE CLIPS SHOULD BE ON THE OUTSIDE OF THE VENT FRAME. COMPRESS THE BOTTOM TWO CLIPS AND BEGIN SLIPPING THE FRAME INTO THE OPENING. ENSURE THAT THE BOTTOM CLIPS ARE IN THE OPENING BEFORE ALLOW THEM TO DECOMPRESS.
6. WITH THE FRAME NOW IN THE OPENING, AND THE BOTTOM SPRINGS IN PLACE, COMPRESS THE TOP SPRINGS AND PUSH THE VENT FRAME INTO THE OPENING COMPLETELY UNTIL THE FRAME IS FLUSH WITH THE WALL.
7. RE-CHECK THAT FRAME IS SQUARE AND SLOTS ARE CLEAR OF DEBRIS, AND CAULK.
8. INSTALL THE DOOR INTO FRAME BY GRASPING THE BOTTOM OF DOOR (WITH FLOAT PINS DOWN) AND FRONT (SMALL SCREEN IN FRONT). SLIDE DOOR INTO INTO FRAME AND ROTATE UNTIL IT IS LATCHED.
9. INSERT THE TOP STRAPS INTO THE TOP TWO STRAP SLOTS ABOUT TWO CLICKS.
10. TO OPEN THE DOOR INSERT TWO CREDIT CARDS INTO THE FLOAT SLOTS AS SHOWN IN THE DIAGRAM. THIS WILL UNLATCH THE DOOR FOR REMOVAL AND CLEANING.

DETAIL SPECIFICATIONS:
MATERIAL: STAINLESS STEEL
OPERATION: AUTOMATIC NON-POWERED ACTIVATION AND OPERATION

INSTALLATION:
SECURED W/ 4 STAINLESS STEEL INSTALLATION CLIPS INCLUDED AND AN ADHESIVE
HYDROSTATIC RELIEF: 200 SQ. FT PER VENT
REQUIREMENTS: MINIMUM OF 2 VENTS PER ENCLOSED AREA

COLORS: STAINLESS (STANDARD)
EXTERIOR POWDER COATED WHITE, WHEAT, GRAY, AND BLACK (AVAILABLE)

NOTES:

1. REFER TO COH STD STRUCTURAL GENERAL NOTES (ZOS21)
2. REFER TO ELECTRICAL DRAWINGS FOR LIGHTING, POWER, CONTROLS, AND EQUIPMENT LAYOUT AND SPECS.
3. REFER TO MECH DRAWINGS FOR HVAC DETAILS & NOTES.
4. REFER TO ELECTRICAL & MECH. DRAWINGS FOR PENETRATIONS THROUGH CONCRETE WALLS AND SLAB.
5. PEMB SHALL PROVIDE HM DOOR & FRAME AND HARDWARE
6. WALLS & ROOF SHALL BE INSULATED. WALL INSULATION SHALL BE ABOVE 69.30.

N

0 10 20 Feet

NO.	DATE	REVISION	APP.

NOTES TO DRAWING:

1. PRE-ENGINEERED STEEL STRUCTURE
2. METAL WALL LINER-(GALV)
3. METAL WALL PANEL (REVERSED)
4. BRICK VENEER
5. LIGHT WEIGHT CONC. ON METAL DECK- RE: STRUCT.
6. HANDRAILS/ GUARDRAILS-RE: ZOS24, ZOS25 & ZOS26
7. LAY-IN ACOUSTICAL CEILING - (VINYL FACED)
8. PRE-FINISHED GUTTER / DOWNSPOUT RE: PEMB
9. PBR METAL ROOFING BY PEMB
10. 30"X30" WATER-TIGHT ACCESS PANEL
11. LIGHT WEIGHT CONC. ON METAL DECK
12. STEEL BEAM - RE: STRUCT.
13. CONC. SLAB ABANDONED VALVE VAULT
14. RAKE TRIM - RE: PEMB
15. 24"x24" EXHAUST FAN W/ REMOVABLE LOUVERS
16. WALL MOUNTED HVAC UNIT - RE: MECH
17. 3070 316 STAINLESS STEEL DOOR/ FRAME
18. 2-3070 316 STAINLESS STEEL DOOR/ FRAME WITH 24" HIGH REMOVABLE DOOR PANEL ABOVE
19. 1-3/4" ALUMINUM GRATING @ LANDING
20. FLOOD VENTS - SEE DETAIL THIS SHEET

FCM Engineers, PC
3300 S. Gessner Rd. Suite 249
T- 713-706-4412
F- 713-706-4410
Tx Firm No. 13481

HATCH
750 TOWN & COUNTRY BLVD
SUITE 650
HOUSTON, TX 77024
P: 832-930-7670
TX FIRM NUMBER: F-314

SURVEYED BY:
AMANI ENGINEERING, INC
FB NO. P-6357

STATE OF TEXAS
CHARLES C.A. MCBEEKE
73307
LICENSED PROFESSIONAL ENGINEER
05/19/26

CITY OF HOUSTON
HOUSTON PUBLIC WORKS

LIFT STATION RENEWAL & REPLACEMENT PROJECT
BISSONNET #4 LIFT STATION
PROPOSED ELECTRICAL BUILDING ARCHITECTURAL PLAN & ELEVATIONS

WBS NUMBER	FOR CITY OF HOUSTON USE ONLY
R-000267-0173-4	HOUSTON PUBLIC WORKS ACCEPTED AND FILED 82825 CITY DRAWING NUMBER Approval Date 08/14/26 HOUSTON TX
DRAWING SCALE	
AS NOTED	
CITY OF HOUSTON PM	
NUPUR KRISHNAN P.E. N.K.	
N1S11	SHEET NO. 97 OF 274

PLOTTED: 7/27/2026 5:37 AM
PLOT STYLE: Monochrome.ctb
FILE PATH: C:\Users\francis.iheagwara\Desktop\FOI\Lift Station\CAD\MBK\Bissonnet\FINAL\Arch.dwg

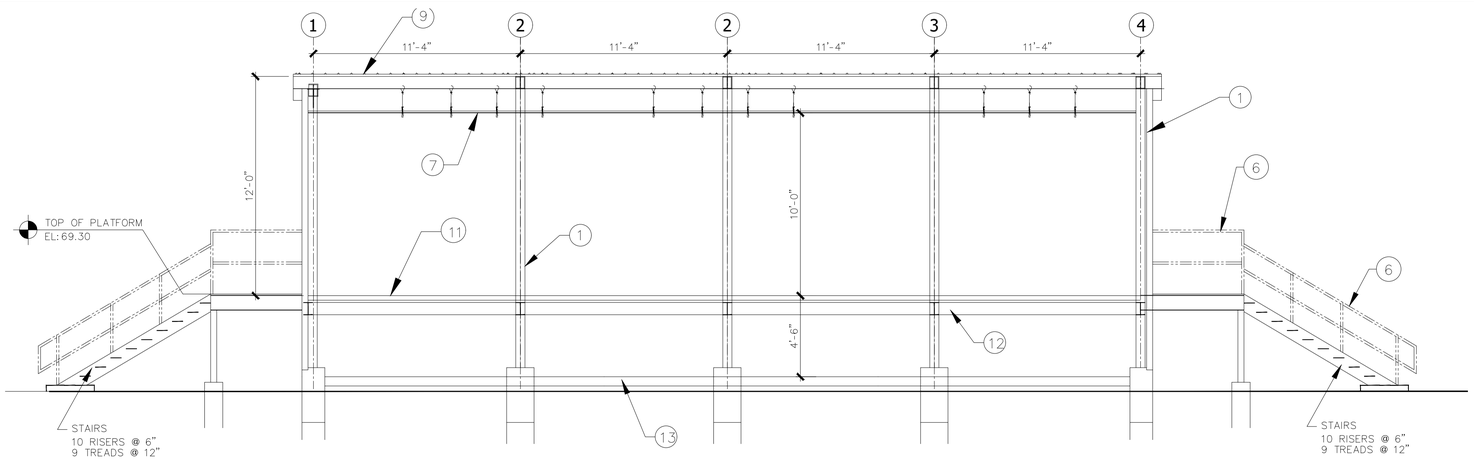

1.0 BLDG CROSS SECTION

SCALE: 1/4" = 1'-0"

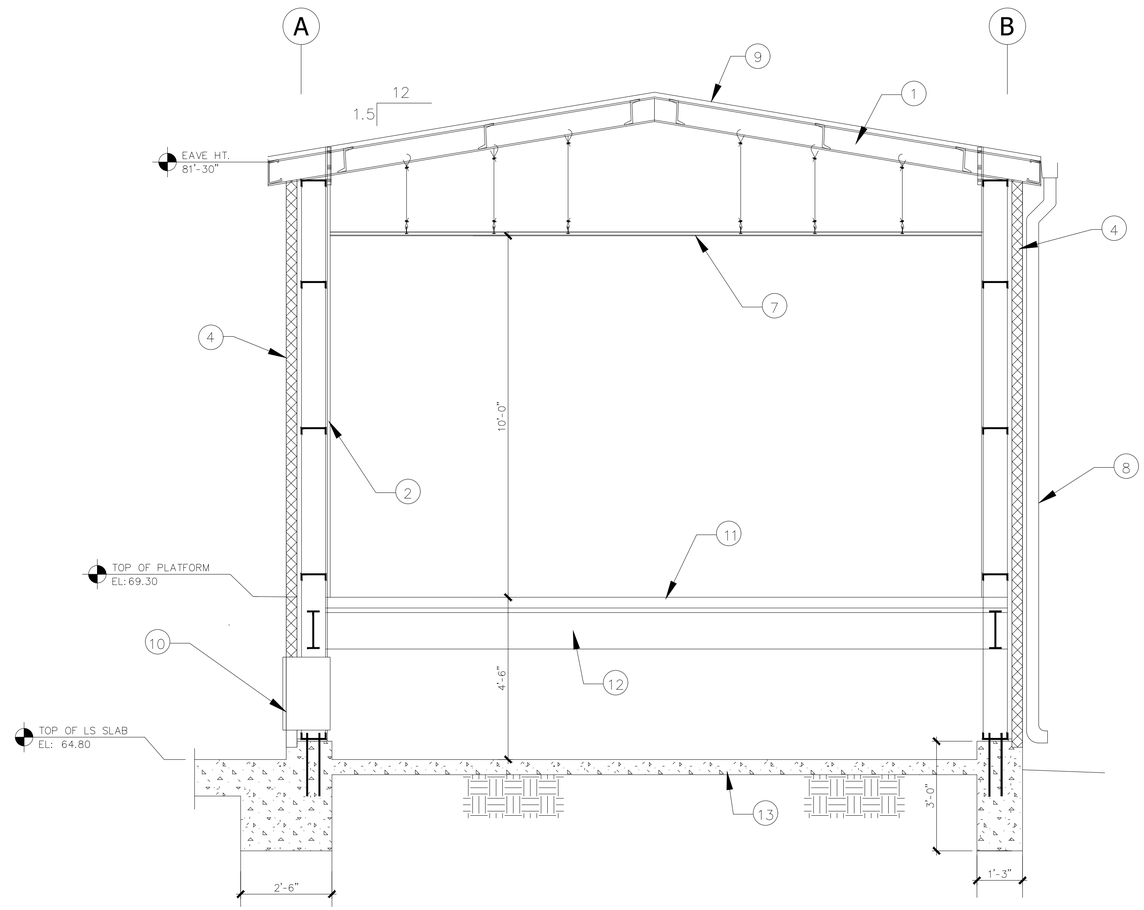

2.0 BLDG CROSS SECTION

SCALE: 1/2" = 1'-0"

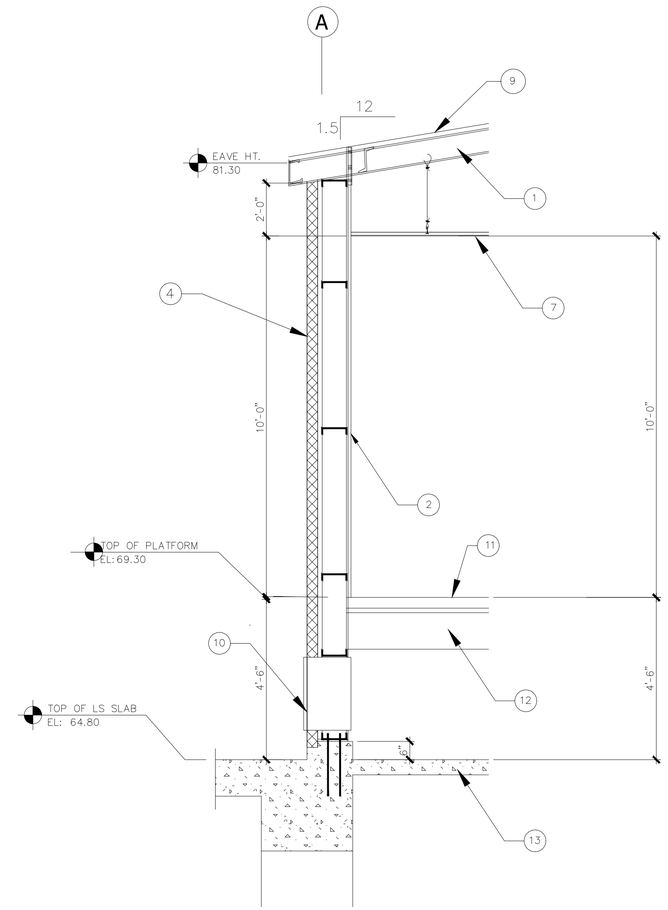

3.0 WALL DETAIL

SCALE: 1/2" = 1'-0"

NOTES:

1. REFER TO COH STD STRUCTURAL GENERAL NOTES (Z0S21)
2. REFER TO COH STD STRUCTURAL DETAILS & NOTES (Z0S22, Z0S23)
3. REFER TO STRUCTURAL PLAN, DETAILS, & NOTES (N1S14)
4. REFER TO ELECTRICAL DRAWINGS FOR LIGHTING, POWER, CONTROLS, AND EQUIPMENT LAYOUT AND SPECS.
5. REFER TO MECH DRAWINGS FOR HVAC DETAILS & NOTES.
6. REFER TO ELECTRICAL & MECH. DRAWINGS FOR PENETRATIONS THROUGH CONCRETE WALLS AND SLAB.
7. REFER TO STEEL BUILDING SPECS.
8. ALL STEEL SHALL BE HOT DIPPED GALVANIZED.

NOTES TO DRAWING:

1. PRE-ENGINEERED STEEL STRUCTURE
2. METAL WALL LINER
3. METAL WALL PANEL (REVERSED)
4. BRICK VENEER
5. LIGHT WEIGHT CONC. ON METAL DECK- RE:STRUCT.
6. HANDRAILS/ GUARDRAILS-RE:Z0S22 & Z0S23
7. LAY-IN ACOUSTICAL CEILING - (VINYL FACED)
8. PRE-FINISHED GUTTER / DOWNSPOUT RE: PEMB
9. PBR METAL ROOFING BY PEMB
10. 30"X30" WATER-TIGHT ACCESS PANEL
11. LIGHT WEIGHT CONC. ON METAL DECK
12. STEEL BEAM - RE: STRUCT.
13. CONC. SLAB - VALVE VAULT
14. RAKE TRIM - RE: PEMB
15. 24"x24" EXHAUST FAN W/ REMOVABLE LOUVERS
16. WALL MOUNTED HVAC UNIT - RE: MECH
17. 3070 316 STAINLESS STEEL DOOR/ FRAME
18. 2-3070 316 STAINLESS STEEL DOOR/ FRAME WITH 24" HIGH REMOVABLE DOOR PANEL ABOVE
19. 1-3/4" ALUMINUM GRATING @ LANDING
20. FLOOD VENTS - SEE DETAIL THIS SHEET

NO.	DATE	REVISION	APP.

FCM Engineers, PC
3300 S. Gessner Rd.
Suite 249
T- 713-706-4412
F- 713-706-4410
Tx Firm No. 13481

HATCH
750 TOWN & COUNTRY BLVD
SUITE 650
HOUSTON, TX 77024
P: 832-930-7670
TX FIRM NUMBER: F-314

STATE OF TEXAS
CHARLES C.A. MGBEIKE
73307
LICENSED PROFESSIONAL ENGINEER
05/19/26

SURVEYED BY:
AMANI ENGINEERING, INC
FB NO. P-6357

CITY OF HOUSTON
HOUSTON PUBLIC WORKS

LIFT STATION RENEWAL & REPLACEMENT PROJECT
BISSONNET #4 LIFT STATION
PROPOSED ELECTRICAL BUILDING
ARCHITECTURAL SECTIONS & DETAILS

WBS NUMBER	FOR CITY OF HOUSTON USE ONLY
R-000267-0173-4	
DRAWING SCALE	
AS NOTED	
CITY OF HOUSTON PM	
NUPUR KRISHNAN P.E. N.K.	
N1S11A	SHEET NO. 97A OF 274

HOUSTON PUBLIC WORKS
ACCEPTED AND FILED
82825
CITY DRAWING NUMBER
Approval Date 08/14/26
HOUSTON TX

PLOT STYLE: Monochrome.ctb PLOTTED: 7/27/2026 5:38 AM

FILE PATH: C:\Users\francis.iheagwara\Desktop\FOI\Lift Station\CAD\MBK\Bissonnet\FINAL\Arch.dwg

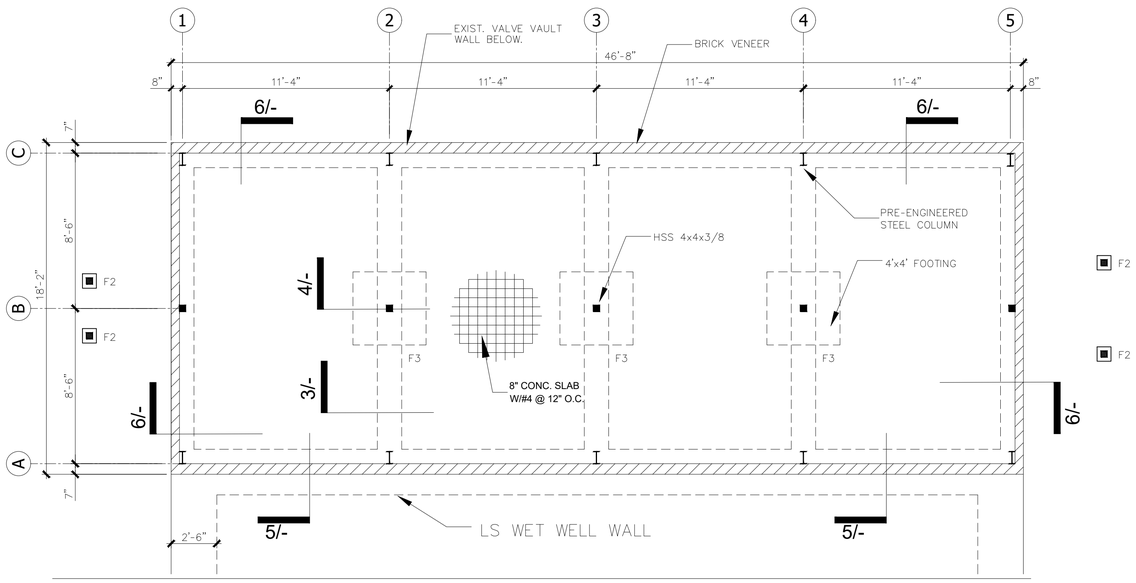

1.0 FOUNDATION PLAN @ EL. 64.80'

SCALE: 1/4" = 1'-0"

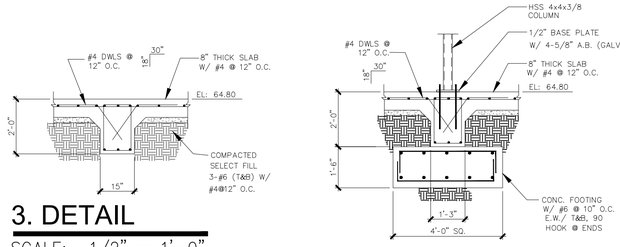

3. DETAIL

SCALE: 1/2" = 1'-0"

4.0 DETAIL

SCALE: 1/2" = 1'-0"

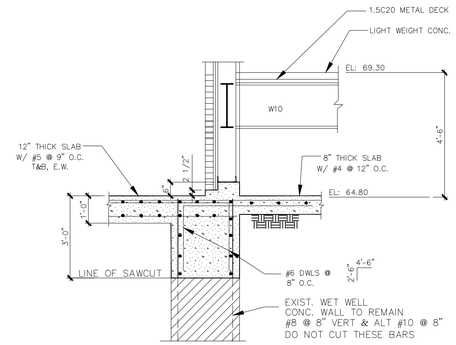

5.0 DETAIL

SCALE: 1/2" = 1'-0"

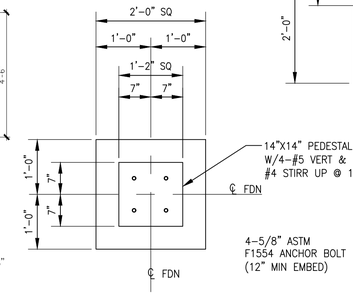

TYPICAL F2 FOUNDATION

SCALE: 3/4" = 1'-0"

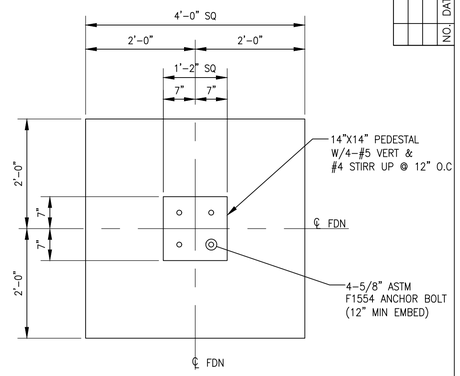

TYPICAL F3 FOUNDATION

SCALE: 3/4" = 1'-0"

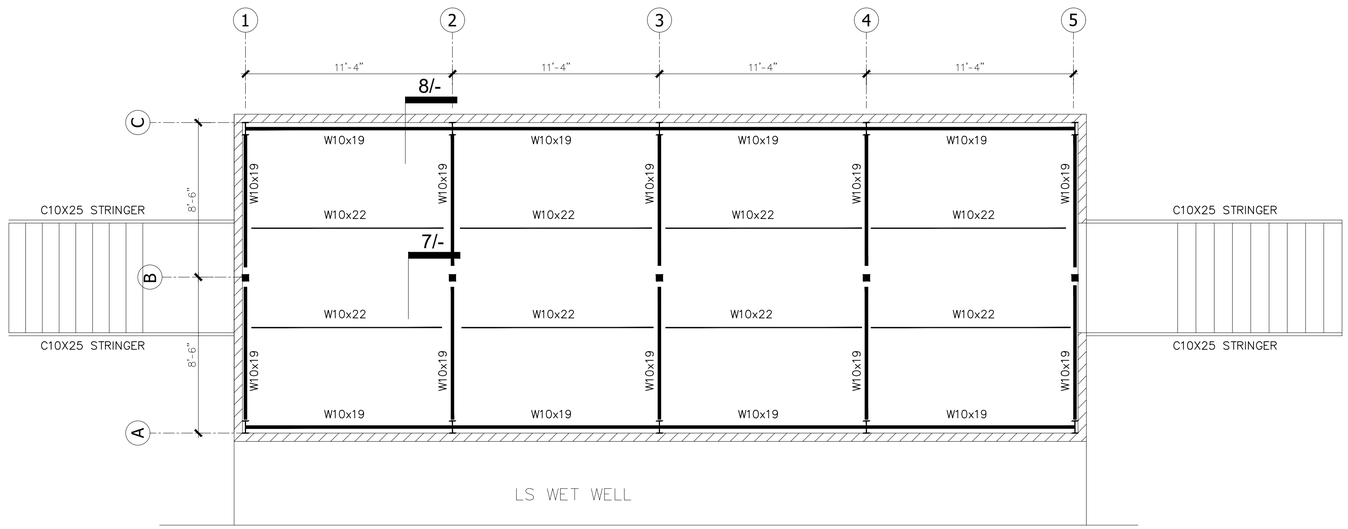

2.0 FRAMING PLAN

SCALE: 1/4" = 1'-0"

ALL PRIMARY STEEL SHALL BE HOT DIPPED GALVANIZED.

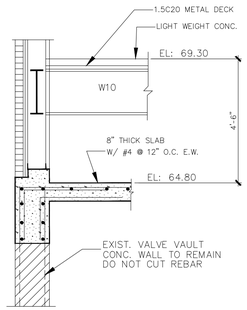

6.0 DETAIL

SCALE: 1/2" = 1'-0"

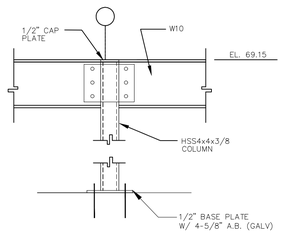

8.0 DETAIL

SCALE: 1/2" = 1'-0"

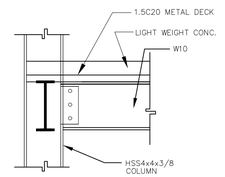

7.0 DETAIL

SCALE: 1/2" = 1'-0"

NO.	DATE	REVISION	APP.

FCM Engineers, PC
3300 S. Gessner Rd. Suite 249
T- 713-706-4412
F- 713-706-4410
Tx Firm No. 13481

HATCH
750 TOWN & COUNTRY BLVD
SUITE 650
HOUSTON, TX 77024
P: 832-930-7670
TX FIRM NUMBER: F-314

SURVEYED BY:
AMANI ENGINEERING, INC
FB NO. P-6357

STATE OF TEXAS — CHARLES C.A. MGBEIKE — 73307 — LICENSED PROFESSIONAL ENGINEER — FINAL — 05/19/26

CITY OF HOUSTON

HOUSTON PUBLIC WORKS

LIFT STATION RENEWAL & REPLACEMENT PROJECT

BISSONNET #4 LIFTING STATION
PROPOSED ELECTRICAL BUILDING
STRUCTURAL PLANS, SECTIONS & DETAILS

WBS NUMBER	FOR CITY OF HOUSTON USE ONLY
R-000267-0173-4	
DRAWING SCALE	
AS NOTED	
CITY OF HOUSTON PM	
NUPUR KRISHNAN P.E. N.K.	

HOUSTON PUBLIC WORKS
ACCEPTED AND FILED
82825
CITY DRAWING NUMBER
Approval Date 08/14/26
HOUSTON TX

N1S12 | SHEET NO. 98 OF 274

PLOT STYLE: Monochrome.ctb PLOTTED: 6/5/2026 4:05 PM
FILE PATH: C:\Users\francis.iheagwara\Desktop\FOI\Lift Station\CAD\MBK\Bissonnet\FINAL\Arch.dwg

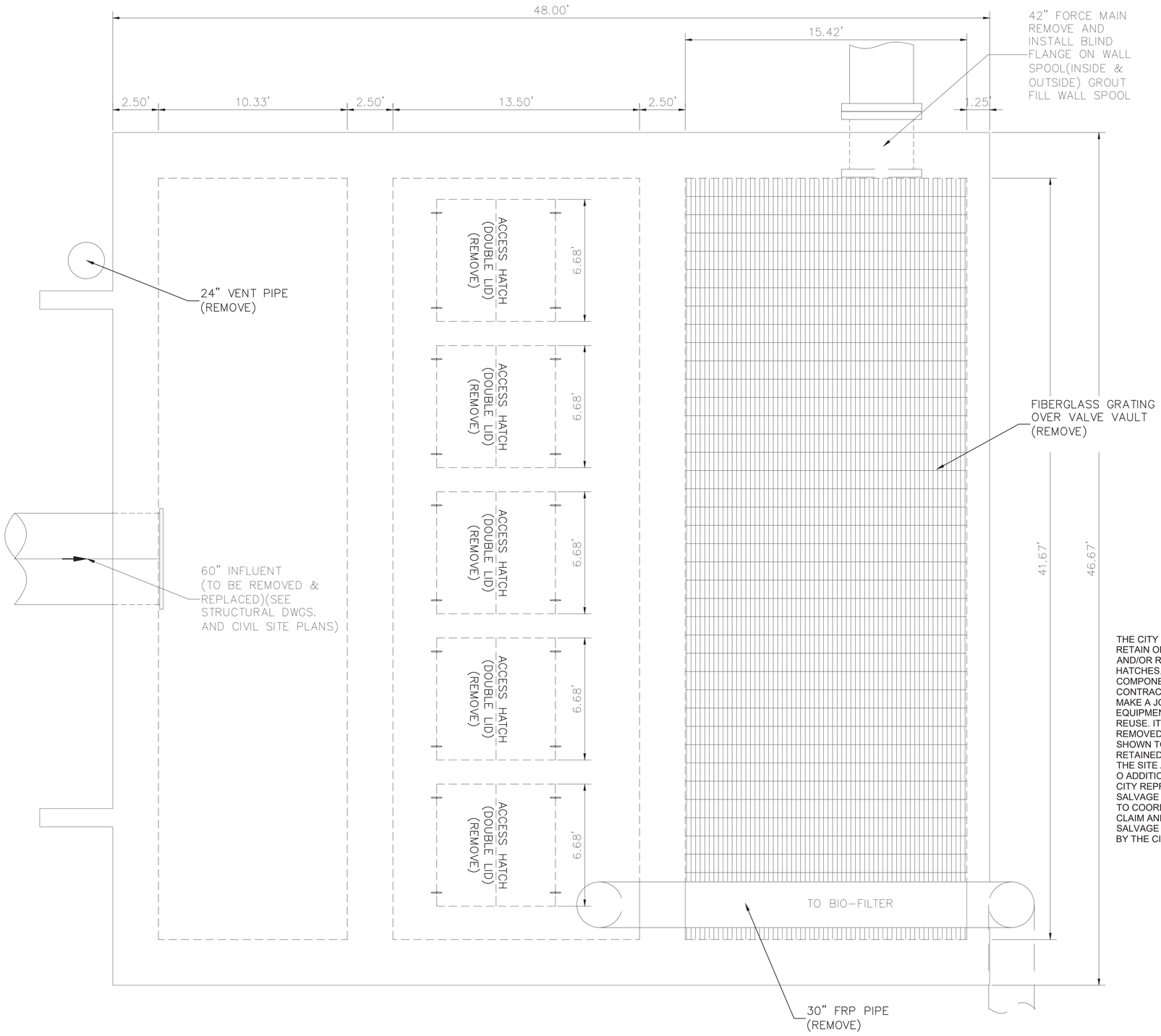

SURFACE PLAN VIEW

0 1 2 3 ORIGINAL SCALE IN INCHES FOR REDUCED PLANS

DEMOLITION NOTES:

1. THIS DRAWING IS BASED ON AVAILABLE RECORDS AND FIELD OBSERVATIONS. THE CONTRACTOR SHALL SATISFY HIMSELF / HERSELF OF THE ACTUAL CONDITIONS EXISTING AT THE SITE. THIS DRAWING DEPICTS PRIMARY MECHANICAL FEATURES. NOT ALL FEATURES, INCLUDING ELECTRICAL ARE NECESSARILY DEPICTED HEREON. THE CONTRACTOR SHALL BE RESPONSIBLE FOR REMOVING ALL EXISTING EQUIPMENT WITHIN THE EXISTING STRUCTURE AS A PRECURSOR TO CONSTRUCTION OF THE PROPOSED IMPROVEMENTS.
2. DEMOLISH AND REMOVE TOP AND SIDE WALLS OF LIFT STATION TO 2-FEET 6-INCHES BELOW LIFT STATION TOP SLAB ELEVATION. STEEL IN WALLS TO REMAIN (WHERE POSSIBLE) AND BE USED TO DEVELOP REINFORCEMENT FOR NEW TOP SLAB (REFER TO STRUCTURAL DETAILS).
3. THE CONTRACTOR SHALL NOT PROCEED WITH DEMOLITION WORK UNTIL AUTHORIZED. LIFT STATION BYPASS PUMPING MUST BE IN PLACE WITH OPERATIONAL ADEQUACY CHECKED AND CONFIRMED BY THE CITY BEFORE PROCEEDING WITH DEMOLITION WORK.
4. THE CONTRACTOR SHALL BE RESPONSIBLE FOR OBTAINING ANY PERMIT(S) REQUIRED FOR DEMOLITION WORK.
5. ALL ITEMS DAMAGED OR REMOVED BY THE CONTRACTOR AND NOT SPECIFICALLY DESIGNATED FOR DEMOLITION SHALL BE REPAIRED OR REPLACED BY THE CONTRACTOR AT NO COST TO THE CITY.
6. THE CONTRACTOR MAY DISCHARGE LIQUID WASTE AND WASH DOWN TO THE CITY WASTEWATER COLLECTION SYSTEM, HOWEVER; ALL DISCHARGES MUST BE COMPLIANT WITH THE CITY'S INDUSTRIAL WASTE ORDINANCE, CHAPTER 47, ARTICLE V. THE CONTRACTOR IS ADVISED THAT A PERMIT OR TEMPORARY DISCHARGE AUTHORIZATION MAY BE REQUIRED. CONTACT THE INDUSTRIAL WASTEWATER DIVISION AT (832) 395-5800. IN LIEU OF A DISCHARGE AUTHORIZATION, THE CONTRACTOR SHALL COLLECT AND HAUL, AT CONTRACTOR EXPENSE, ALL NON-SOLID DISCHARGES TO AN APPROVED CITY FACILITY.
7. REFER TO STRUCTURAL AND ELECTRICAL DEMOLITION DRAWINGS FOR INFORMATION RELATED TO THOSE SPECIFIC ACTIVITIES.
8. THE CITY OF HOUSTON WILL RETAIN SALVAGE RIGHTS TO ALL MATERIALS AND EQUIPMENT. FOR FURTHER INFORMATION, REFER TO SPECIFICATION SECTION 01110, PARAGRAPH 1.02.I.

THE CITY SHALL HAVE THE FIRST RIGHT OF REFUSAL TO RETAIN OR SALVAGE ALL ITEMS SHOWN TO BE DEMOLISHED AND/OR REMOVED, INCLUDING BUT NOT LIMITED TO PUMPS, HATCHES, AND ELECTRICAL AND INSTRUMENTATION COMPONENTS. PRIOR TO INITIATING DEMO WORK, THE CONTRACTOR AND THE DESIGNATED FIELD INSPECTOR SHALL MAKE A JOINT INSPECTION OF EACH SITE TO IDENTIFY ALL EQUIPMENT TO BE RETAINED BY THE CITY FOR SALVAGE AND REUSE. ITEMS IDENTIFIED FOR SALVAGE SHALL BE CAREFULLY REMOVED TO PROTECT FROM DAMAGE. ALL OTHER ITEMS SHOWN TO BE DEMOLISHED / REMOVED THAT ARE NOT RETAINED BY THE CITY SHALL BE PROPERLY REMOVED FROM THE SITE AND HANDLED PER SPECIFICATIONS AT N O ADDITIONAL COST TO THE CITY. CONTACT CITY DESIGNATED CITY REPRESENTATIVE FOR WASTEWATER TREATMENT PLANT SALVAGE AT LEAST 72 HOURS PRIOR TO DEMOLITION IN ORDER TO COORDINATE REMOVAL OF ANY ITEMS THE CITY WISHES TO CLAIM AND SALVAGE. THE CONTRACTOR SHALL DELIVER ALL SALVAGE ITEMS TO A LOCATION WITHIN THE CITY DETERMINED BY THE CITY.

AMANI ENGINEERING, INC.
11011 RICHMOND AVENUE
SUITE 700
HOUSTON, TEXAS 77024
TEL: (713) 270-5700
TBPE REG. NO. F-4528
TBPELS REG. NO. 1028200

HATCH
750 TOWN & COUNTRY BLVD.
SUITE 650
HOUSTON, TEXAS 77024
P:832-930-7670
TX FIRM NUMBER: F-314

SURVEYED BY:
AMANI ENGINEERING,INC.
FB NO. P-6357

STATE OF TEXAS
DAVID L BROWN
48282
REGISTERED
PROFESSIONAL
ENGINEER
8/11/2026

CITY OF HOUSTON
HOUSTON PUBLIC WORKS

LIFT STATION RENEWAL & REPLACEMENT PROJECT

BISSONNET #4 LIFT STATION
EXISTING SURFACE PLAN VIEW
MECHANICAL DEMOLITION PLAN

WBS NUMBER	FOR CITY OF HOUSTON USE ONLY
R-000267-0173-4	HOUSTON PUBLIC WORKS ACCEPTED AND FILED 82825 CITY DRAWING NUMBER Approval Date 08/14/26 HOUSTON TX
DRAWING SCALE	
Scale 1"=3'	
CITY OF HOUSTON PM	
NUPUR KRISHNAN, PE N.K.	
N1M20	SHEET NO. 99 OF 274

FILE NAME:
PLOTTED ON:

P:\Cad\2024\24013 - Hatch - COH FY20 Lift Stations\CAD_DWG\LIFT STATIONS MECHANICAL DEMOLITION PLAN\6-BISSONNET #4\LS-BISSONNET #4.dwg

THE CITY SHALL HAVE THE FIRST RIGHT OF REFUSAL TO RETAIN OR SALVAGE ALL ITEMS SHOWN TO BE DEMOLISHED AND/OR REMOVED, INCLUDING BUT NOT LIMITED TO PUMPS, HATCHES, AND ELECTRICAL AND INSTRUMENTATION COMPONENTS. PRIOR TO INITIATING DEMO WORK, THE CONTRACTOR AND THE DESIGNATED FIELD INSPECTOR SHALL MAKE A JOINT INSPECTION OF EACH SITE TO IDENTIFY ALL EQUIPMENT TO BE RETAINED BY THE CITY FOR SALVAGE AND REUSE. ITEMS IDENTIFIED FOR SALVAGE SHALL BE CAREFULLY REMOVED TO PROTECT FROM DAMAGE. ALL OTHER ITEMS SHOWN TO BE DEMOLISHED / REMOVED THAT ARE NOT RETAINED BY THE CITY SHALL BE PROPERLY REMOVED FROM THE SITE AND HANDLED PER SPECIFICATIONS AT N O ADDITIONAL COST TO THE CITY. CONTACT CITY DESIGNATED CITY REPRESENTATIVE FOR WASTEWATER TREATMENT PLANT SALVAGE AT LEAST 72 HOURS PRIOR TO DEMOLITION IN ORDER TO COORDINATE REMOVAL OF ANY ITEMS THE CITY WISHES TO CLAIM AND SALVAGE. THE CONTRACTOR SHALL DELIVER ALL SALVAGE ITEMS TO A LOCATION WITHIN THE CITY DETERMINED BY THE CITY.

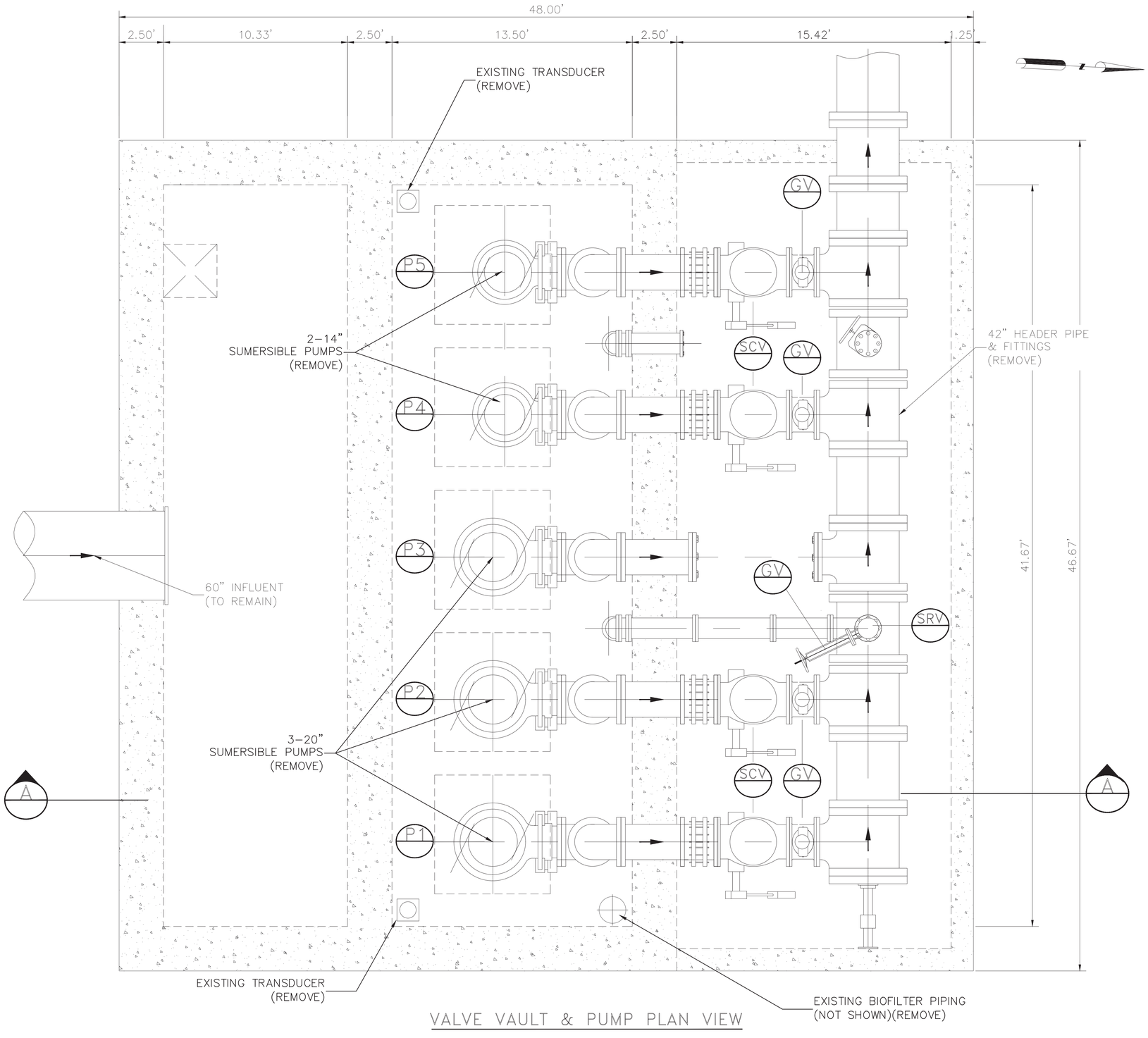

VALVE VAULT & PUMP PLAN VIEW

LEGEND

- SCV — 24" SWING CHECK VALVE (REMOVE)
- SRV — 14" SURGE RELIEF VALVE (REMOVE)
- GV — 24" KNIFE GATE VALVE (REMOVE)
- P1 — PUMP (REMOVE)
- P2 — PUMP (REMOVE)
- P3 — PUMP (REMOVE)

AMANI ENGINEERING, INC.
11011 RICHMOND AVENUE
SUITE 700
HOUSTON, TEXAS 77024
TEL: (713) 270-5700
TBPE REG. NO. F-4528
TBPELS REG. NO. 1028200

HATCH
750 TOWN & COUNTRY BLVD.
SUITE 650
HOUSTON, TEXAS 77024
P:832-930-7670
TX FIRM NUMBER: F-314

SURVEYED BY:
AMANI ENGINEERING,INC.
FB NO. P-6357

STATE OF TEXAS
DAVID L. BROWN
48282
REGISTERED
PROFESSIONAL
SURVEYOR
8/11/2026

CITY OF HOUSTON
HOUSTON PUBLIC WORKS

LIFT STATION RENEWAL & REPLACEMENT PROJECT

BISSONNET #4 LIFT STATION
EXISTING PLAN VIEW SECTION
MECHANICAL DEMOLITION PLAN

WBS NUMBER	FOR CITY OF HOUSTON USE ONLY
R-000267-0173-4	HOUSTON PUBLIC WORKS ACCEPTED AND FILED 82825 CITY DRAWING NUMBER Approval Date 08/14/26 HOUSTON TX
DRAWING SCALE	
Scale 1"=3'	
CITY OF HOUSTON PM	
NUPUR KRISHNAN, PE N.K.	
SHEET NO. 100 OF 274	

N1M21

FILE NAME:
PLOTTED ON:

0 1 2 3 ORIGINAL SCALE IN INCHES FOR REDUCED PLANS

P:\Cads\2024\24013 - Hatch - COH FY20 Lift Stations\CAD_DWG\LIFT STATIONS MECHANICAL DEMOLITION PLAN\6-BISSONNET #4\LS-BISSONNET #4.dwg

THE CITY SHALL HAVE THE FIRST RIGHT OF REFUSAL TO RETAIN OR SALVAGE ALL ITEMS SHOWN TO BE DEMOLISHED AND/OR REMOVED, INCLUDING BUT NOT LIMITED TO PUMPS, HATCHES, AND ELECTRICAL AND INSTRUMENTATION COMPONENTS. PRIOR TO INITIATING DEMO WORK, THE CONTRACTOR AND THE DESIGNATED FIELD INSPECTOR SHALL MAKE A JOINT INSPECTION OF EACH SITE TO IDENTIFY ALL EQUIPMENT TO BE RETAINED BY THE CITY FOR SALVAGE AND REUSE. ITEMS IDENTIFIED FOR SALVAGE SHALL BE CAREFULLY REMOVED TO PROTECT FROM DAMAGE. ALL OTHER ITEMS SHOWN TO BE DEMOLISHED / REMOVED THAT ARE NOT RETAINED BY THE CITY SHALL BE PROPERLY REMOVED FROM THE SITE AND HANDLED PER SPECIFICATIONS AT N O ADDITIONAL COST TO THE CITY. CONTACT CITY DESIGNATED CITY REPRESENTATIVE FOR WASTEWATER TREATMENT PLANT SALVAGE AT LEAST 72 HOURS PRIOR TO DEMOLITION IN ORDER TO COORDINATE REMOVAL OF ANY ITEMS THE CITY WISHES TO CLAIM AND SALVAGE. THE CONTRACTOR SHALL DELIVER ALL SALVAGE ITEMS TO A LOCATION WITHIN THE CITY DETERMINED BY THE CITY.

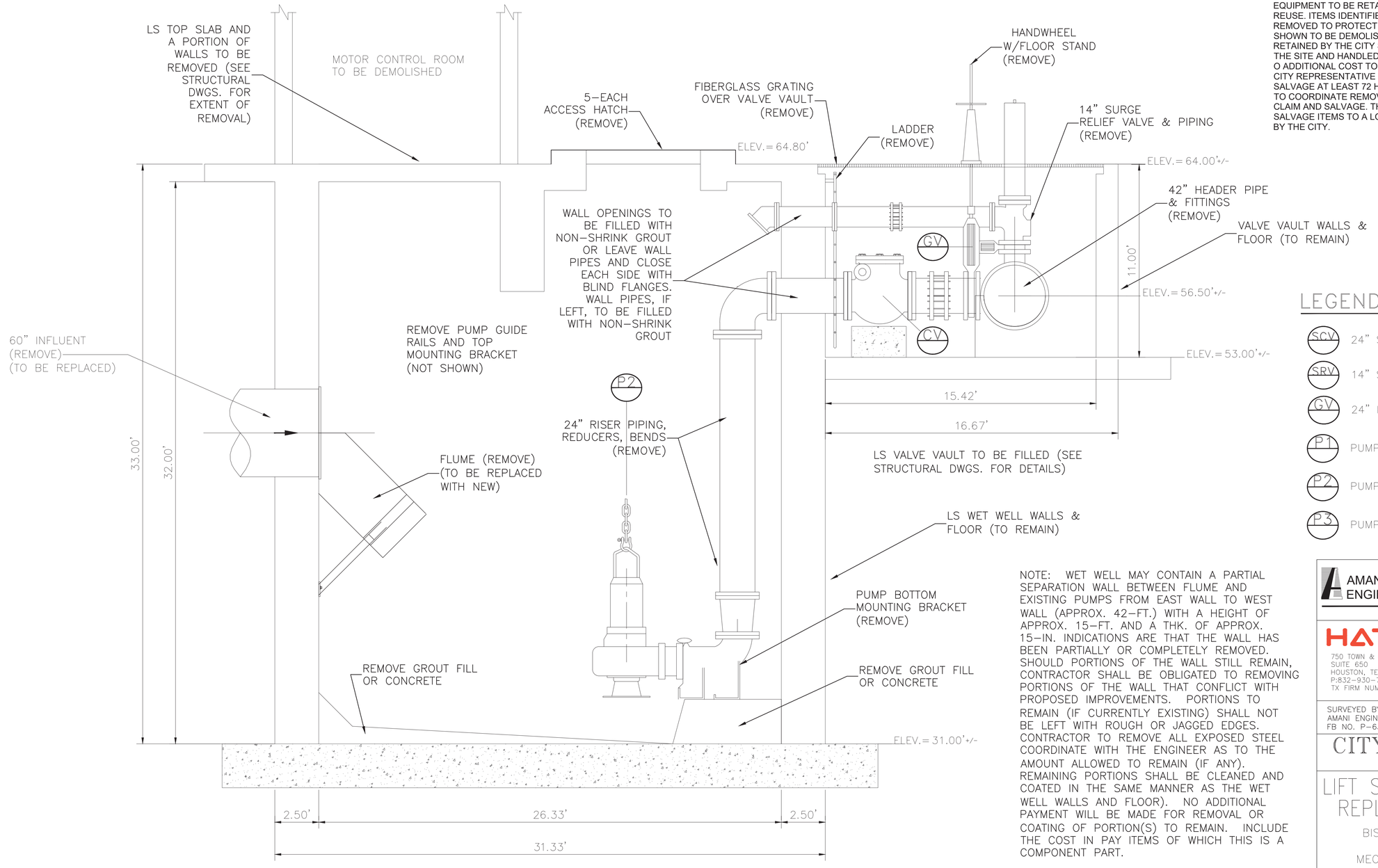

SECTION A–A

LEGEND

- SCV — 24" SWING CHECK VALVE (REMOVE)
- SRV — 14" SURGE RELIEF VALVE (REMOVE)
- GV — 24" KNIFE GATE VALVE (REMOVE)
- P1 — PUMP (REMOVE)
- P2 — PUMP (REMOVE)
- P3 — PUMP (REMOVE)

NOTE: WET WELL MAY CONTAIN A PARTIAL SEPARATION WALL BETWEEN FLUME AND EXISTING PUMPS FROM EAST WALL TO WEST WALL (APPROX. 42–FT.) WITH A HEIGHT OF APPROX. 15–FT. AND A THK. OF APPROX. 15–IN. INDICATIONS ARE THAT THE WALL HAS BEEN PARTIALLY OR COMPLETELY REMOVED. SHOULD PORTIONS OF THE WALL STILL REMAIN, CONTRACTOR SHALL BE OBLIGATED TO REMOVING PORTIONS OF THE WALL THAT CONFLICT WITH PROPOSED IMPROVEMENTS. PORTIONS TO REMAIN (IF CURRENTLY EXISTING) SHALL NOT BE LEFT WITH ROUGH OR JAGGED EDGES. CONTRACTOR TO REMOVE ALL EXPOSED STEEL COORDINATE WITH THE ENGINEER AS TO THE AMOUNT ALLOWED TO REMAIN (IF ANY). REMAINING PORTIONS SHALL BE CLEANED AND COATED IN THE SAME MANNER AS THE WET WELL WALLS AND FLOOR). NO ADDITIONAL PAYMENT WILL BE MADE FOR REMOVAL OR COATING OF PORTION(S) TO REMAIN. INCLUDE THE COST IN PAY ITEMS OF WHICH THIS IS A COMPONENT PART.

AMANI ENGINEERING, INC.
11011 RICHMOND AVENUE
SUITE 700
HOUSTON, TEXAS 77024
TEL: (713) 270–5700
TBPE REG. NO. F–4528
TBPELS REG. NO. 1028200

HATCH
750 TOWN & COUNTRY BLVD.
SUITE 650
HOUSTON, TEXAS 77024
P:832–930–7670
TX FIRM NUMBER: F–314

SURVEYED BY:
AMANI ENGINEERING,INC.
FB NO. P–6357

STATE OF TEXAS
DAVID L. BROWN
48282
REGISTERED
PROFESSIONAL
LAND SURVEYOR
8/11/2026

CITY OF HOUSTON
HOUSTON PUBLIC WORKS

LIFT STATION RENEWAL & REPLACEMENT PROJECT

BISSONNET #4 LIFT STATION
EXISTING SECTION VIEW
MECHANICAL DEMOLITION PLAN

WBS NUMBER	FOR CITY OF HOUSTON USE ONLY
R–000267–0173–4	HOUSTON PUBLIC WORKS ACCEPTED AND FILED 82825 CITY DRAWING NUMBER Approval Date 08/14/26 HOUSTON TX
DRAWING SCALE	
Scale 1"=3'	
CITY OF HOUSTON PM	
NUPUR KRISHNAN, PE N.K.	
N1M22	SHEET NO. 101 OF 274

FILE NAME:
PLOTTED ON:

0 1 2 3 ORIGINAL SCALE IN INCHES FOR REDUCED PLANS

P:\Cords\2024\24013 - Hatch - COH FY20 Lift Stations\CAD_DWG\LIFT STATIONS MECHANICAL DEMOLITION PLAN\6-BISSONNET #4\LS-BISSONNET #4.dwg

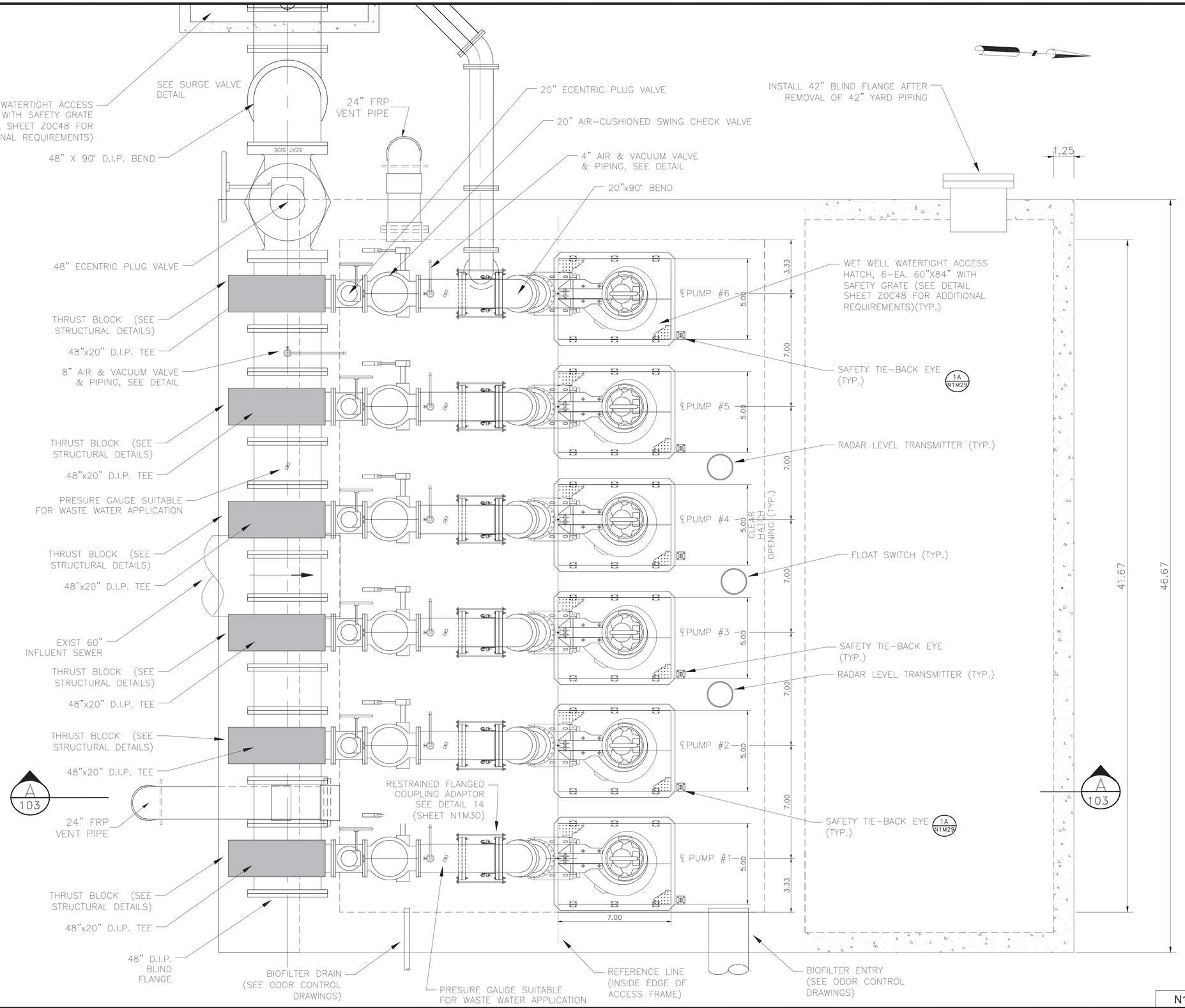

NOTES:

1. CONTRACTOR TO VERIFY DIMENSIONS REQUIRED TO INSTALL AND OPERATE VALVES.
2. SEE DETAIL AND STRUCTURAL DRAWINGS FOR DIMENSIONS AND INFORMATION NOT SHOWN.
3. CONTRACTOR TO CONFIRM SIZE AND LOCATION OF THE WET WELL HATCHES PER HATCH AND PUMP MANUFACTURER'S REQUIREMENTS.
4. PUMP AND ANCHOR BOLTS ARE TO BE ADHESIVE TYPE, AND EMBEDDED IN THE CONCRETE SLAB. CONTRACTOR TO SUBMIT DESIGN OF PUMP ANCHOR BOLTS AND PATTERN, INCLUDING CALCULATIONS, DURING SHOP DRAWING SUBMISSION.
5. CONTRACTOR TO PROVIDE ADHESIVE ANCHORS IN LIEU OF WEDGE ANCHORS FOR ALL SUBMERGED CONDITIONS AND SUBMIT DESIGN OF ANCHOR BOLTS DURING SHOP DRAWING SUBMISSION.
6. ALL PIPING IN THE WET WELL SHALL BE FLANGED. NO FLANGED COUPLING ADAPTORS, OR VICTAULIC STYLE COUPLINGS SHALL BE PERMITTED INSIDE OF THE WET WELL.
7. INSTALL PLUG VALVES TO OPEN UPWARD AND TO CLOSE TO A SEATING POSITION.
8. INSTALL CHECK VALVES SO THAT THE WEIGHT LEVER POSITION IS APPROXIMATELY 45° BELOW THE VALVE HORIZONTAL CENTER LINE IN THE CLOSE POSITION: AND APPROXIMATELY 45° ABOVE THE HORIZONTAL CENTER LINE IN THE FULL OPEN POSITION.
9. THE ACCESS HATCHES MUST BE WATERTIGHT AND PAINTED FOREST GREEN. THE SAFETY GRATING MUST BE PROVIDED WITH A SAFETY ORANGE POWDER COAT FINISH. COATING REQUIREMENTS SHALL BE IN COMPLIANCE WITH SPECIFICATION REQUIREMENTS.
10. LABEL HATCHES WITH THE CORRESPONDING PUMP NUMBER AND CHECK VALVES WITH THE CORRESPONDING VALVE NUMBER USING A 12-INCH BY 12-INCH PLATE ENGRAVED WITH 6-INCH LETTERING WELDED TO THE HATCHES AND ADHERED TO THE VALVES.
11. COATINGS ARE REQUIRED BY THE CITY OF HOUSTON ON ALL VENT PIPES. COATINGS SHALL COMPLY WITH SPECIFICATIONS 02083, PARAGRAPH 2.11.C.4 AND 09901, PARAGRAPH 2.02.G.
12. PRESSURE GAUGES SHALL BE SUITABLE FOR WASTEWATER APPLICATIONS.
13. APPLY PROTECTIVE COATINGS TO PIPES, VALVES AND FITTINGS AS APPLICABLE. LABEL PIPING WITH DIRECTIONAL FLOW ARROWS IN COMPLIANCE WITH SPECIFICATION REQUIREMENTS
14. AIR RELEASE AND AIR VACUUM VALVES TO BE PROVIDED WITH STAINLESS STEEL BODIES IN COMPLIANCE WITH SPECIFICATION REQUIREMENTS.

NO.	DATE	REVISION	APP.

AMANI ENGINEERING, INC.
11011 RICHMOND AVENUE
SUITE 700
HOUSTON, TEXAS 77024
TEL: (713) 270-5700
TBPE REG. NO. F-4528
TBPELS REG. NO. 1028200

HATCH
750 TOWN & COUNTRY BLVD.
SUITE 650
HOUSTON, TEXAS 77024
P:832-930-7670
TX FIRM NUMBER: F-314

SURVEYED BY:
AMANI ENGINEERING,INC.
FB NO. P-6357

STATE OF TEXAS
DAVID L. BROWN
48282
REGISTERED
PROFESSIONAL ENGINEER
8/11/2026

CITY OF HOUSTON
HOUSTON PUBLIC WORKS

LIFT STATION RENEWAL & REPLACEMENT PROJECT

BISSONNET #4 LIFT STATION
PROPOSED MECHANICAL PLAN VIEW

WBS NUMBER	FOR CITY OF HOUSTON USE ONLY
R-000267-0173-4	HOUSTON PUBLIC WORKS ACCEPTED AND FILED 82825 CITY DRAWING NUMBER Approval Date 08/14/26 HOUSTON TX
DRAWING SCALE	
Scale 1"=3'	
CITY OF HOUSTON PM	
N.K. NUPUR KRISHNAN, PE	
N1M23	SHEET NO. 102 OF 274

FILE NAME:
PLOTTED ON:

P:\Cad\2024\24013 - Hatch - COH FY20 Lift Stations\CAD_DWG\Phase II\6-Phase II BISSONNET #4\Phase II BISSONNET #4.dwg

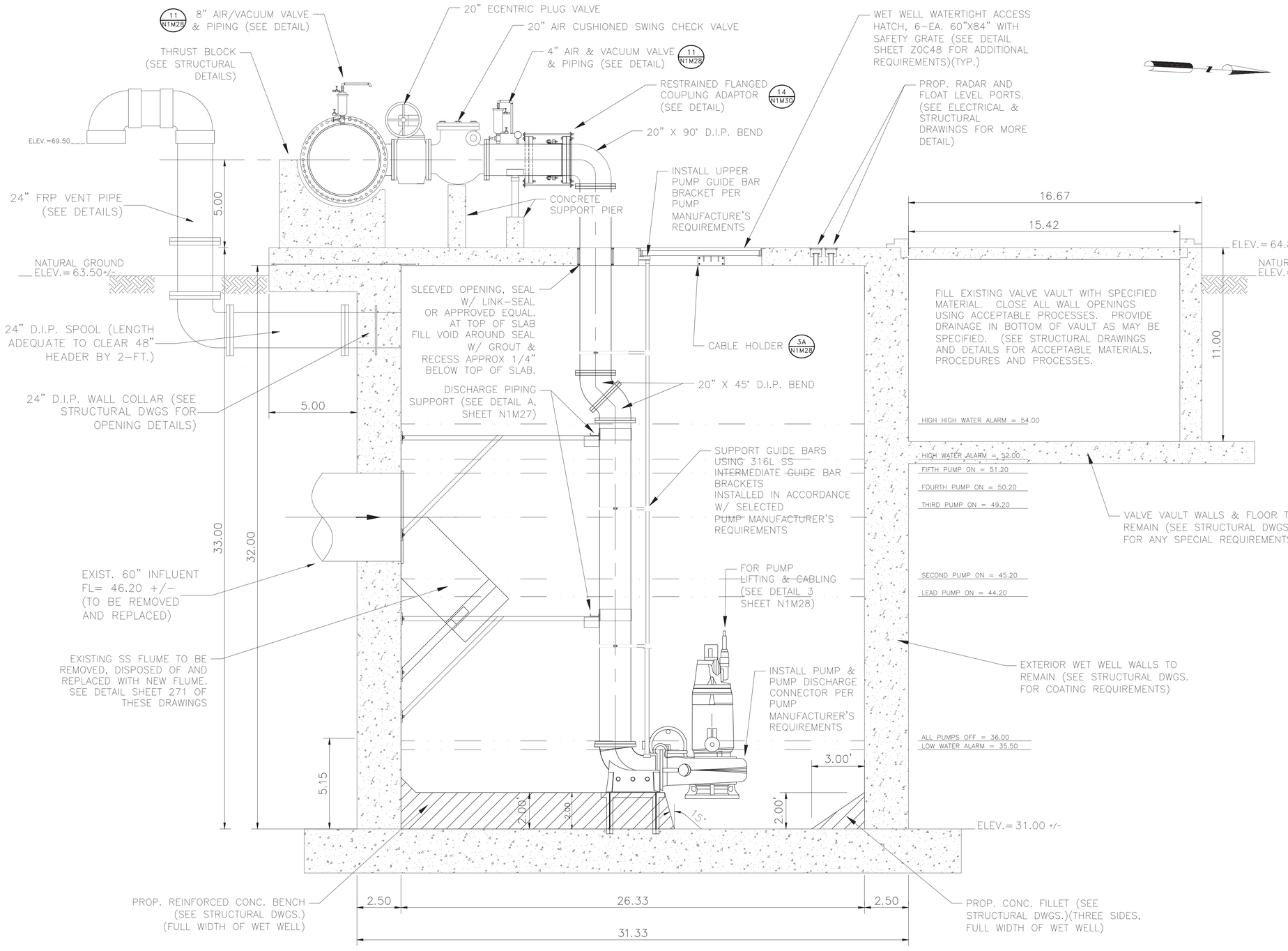

SECTION A-A

NOTES:

1. CONTRACTOR TO VERIFY DIMENSIONS REQUIRED TO INSTALL AND OPERATE VALVES.
2. SEE DETAIL AND STRUCTURAL DRAWINGS FOR DIMENSIONS AND INFORMATION NOT SHOWN.
3. CONTRACTOR TO CONFIRM SIZE AND LOCATION OF THE WET WELL HATCHES PER HATCH AND PUMP MANUFACTURER'S REQUIREMENTS.
4. PUMP AND ANCHOR BOLTS ARE TO BE ADHESIVE TYPE, AND EMBEDDED IN THE CONCRETE SLAB. CONTRACTOR TO SUBMIT DESIGN OF PUMP ANCHOR BOLTS AND PATTERN, INCLUDING CALCULATIONS, DURING SHOP DRAWING SUBMISSION.
5. CONTRACTOR TO PROVIDE ADHESIVE ANCHORS IN LIEU OF WEDGE ANCHORS FOR ALL SUBMERGED CONDITIONS AND SUBMIT DESIGN OF ANCHOR BOLTS DURING SHOP DRAWING SUBMISSION.
6. ALL PIPING IN THE WET WELL SHALL BE FLANGED. NO FLANGED COUPLING ADAPTORS, OR VICTAULIC STYLE COUPLINGS SHALL BE PERMITTED INSIDE OF THE WET WELL.
7. INSTALL PLUG VALVES TO OPEN UPWARD AND TO CLOSE TO A SEATING POSITION.
8. INSTALL CHECK VALVES SO THAT THE WEIGHT LEVER POSITION IS APPROXIMATELY 45° BELOW THE VALVE HORIZONTAL CENTER LINE IN THE CLOSE POSITION: AND APPROXIMATELY 45° ABOVE THE HORIZONTAL CENTER LINE IN THE FULL OPEN POSITION.
9. THE ACCESS HATCHES MUST BE WATERTIGHT AND PAINTED FOREST GREEN. THE SAFETY GRATING MUST BE PROVIDED WITH A SAFETY ORANGE POWDER COAT FINISH. COATING REQUIREMENTS SHALL BE IN COMPLIANCE WITH SPECIFICATION REQUIREMENTS.
10. LABEL HATCHES WITH THE CORRESPONDING PUMP NUMBER AND CHECK VALVES WITH THE CORRESPONDING VALVE NUMBER USING A 12-INCH BY 12-INCH PLATE ENGRAVED WITH 6-INCH LETTERING WELDED TO THE HATCHES AND ADHERED TO THE VALVES.
11. UV PROTECTIVE COATINGS ARE REQUIRED BY THE CITY OF HOUSTON ON ALL VENT PIPES.
12. PRESSURE GAUGES SHALL BE SUITABLE FOR WASTEWATER APPLICATIONS.
13. APPLY PROTECTIVE COATINGS TO PIPES, VALVES AND FITTINGS AS APPLICABLE. LABEL PIPING WITH DIRECTIONAL FLOW ARROWS IN COMPLIANCE WITH SPECIFICATION REQUIREMENTS
14. AIR RELEASE AND AIR VACUUM VALVES TO BE PROVIDED WITH STAINLESS STEEL BODIES IN COMPLIANCE WITH SPECIFICATION REQUIREMENTS.

NO.	DATE	REVISION	APP.

AMANI ENGINEERING, INC.
11011 RICHMOND AVENUE
SUITE 700
HOUSTON, TEXAS 77024
TEL: (713) 270-5700
TBPE REG. NO. F-4528
TBPELS REG. NO. 1028200

HATCH
750 TOWN & COUNTRY BLVD.
SUITE 650
HOUSTON, TEXAS 77024
P:832-930-7670
TX FIRM NUMBER: F-314

SURVEYED BY:
AMANI ENGINEERING,INC.
FB NO. P-6357

STATE OF TEXAS
DAVID L. BROWN
48282
REGISTERED
PROFESSIONAL
LAND SURVEYOR
8/11/2026

CITY OF HOUSTON
HOUSTON PUBLIC WORKS

LIFT STATION RENEWAL & REPLACEMENT PROJECT

BISSONNET #4 LIFT STATION
PROPOSED MECHANICAL ELEVATION
SECTION A-A

WBS NUMBER	R-000267-0173-4
DRAWING SCALE	Scale 1"=3'
CITY OF HOUSTON PM	N.K. NUPUR KRISHNAN, PE
SHEET NO. 103 OF 274	

FOR CITY OF HOUSTON USE ONLY

HOUSTON PUBLIC WORKS
ACCEPTED AND FILED
82825
CITY DRAWING NUMBER
Approval Date 08/14/26
HOUSTON TX

N1M24

FILE NAME:
PLOTTED ON:

ORIGINAL SCALE IN INCHES FOR REDUCED PLANS
0 1 2 3

P:\Code\2024\24013 - Hatch - COH FY26 Lift Stations\CAD_DWG\Phase IV\E-Phase II BISSONNET #4\Phase II LS-BISSONNET #4.dwg

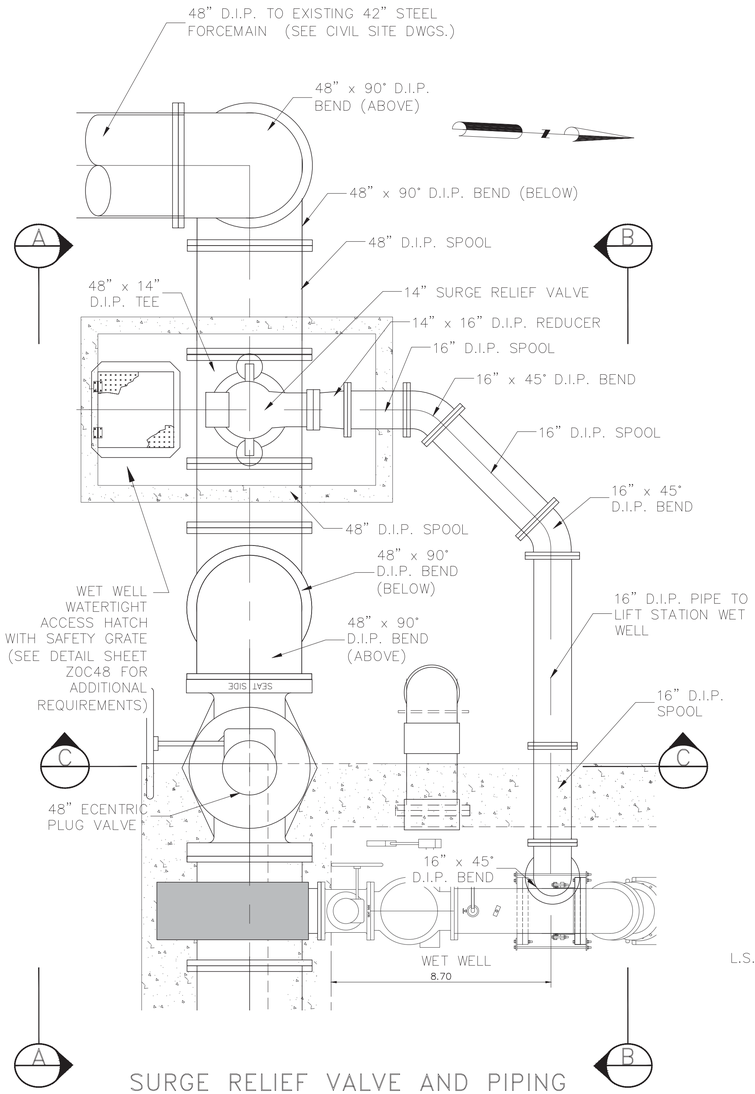

SURGE RELIEF VALVE AND PIPING

TOP VIEW

SCALE 1":3'

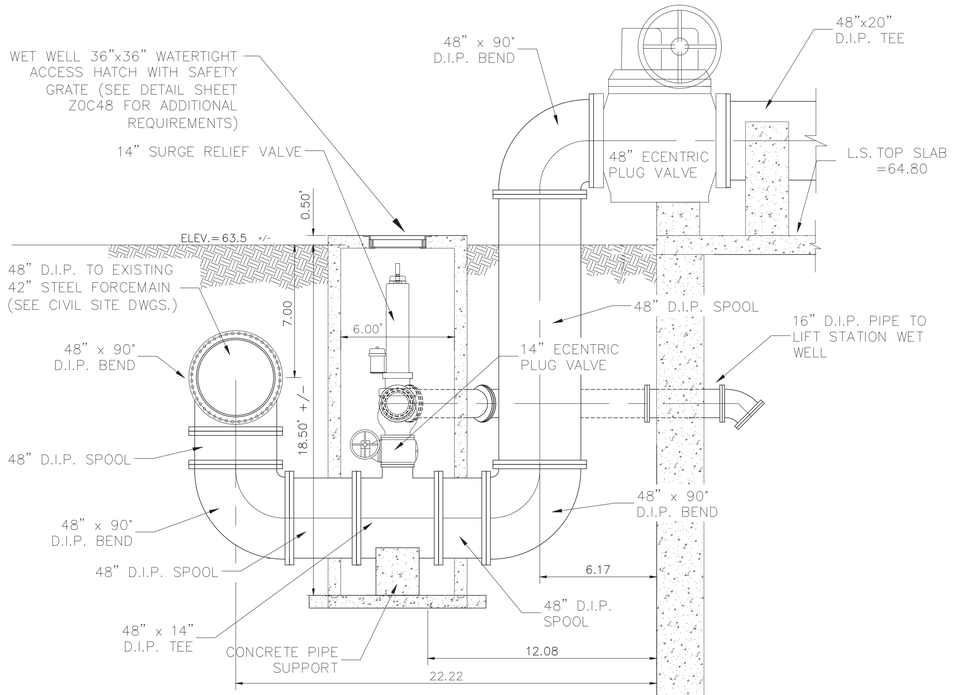

SECTION A–A (LOOKING NORTH)

SCALE 1":4'

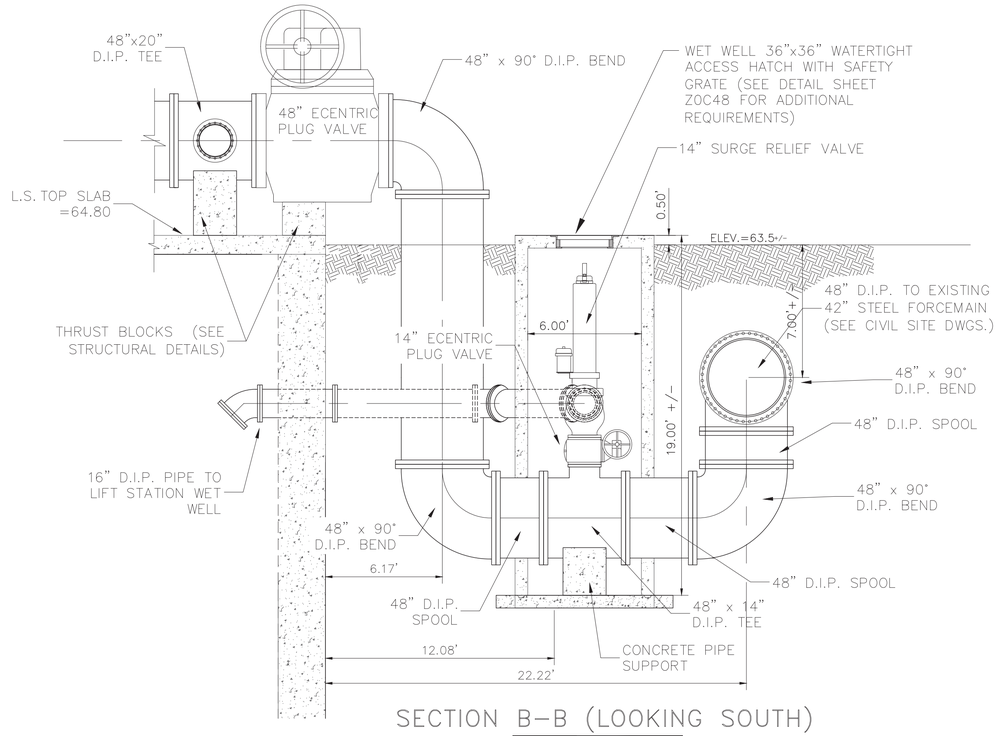

SECTION B–B (LOOKING SOUTH)

SCALE 1":4'

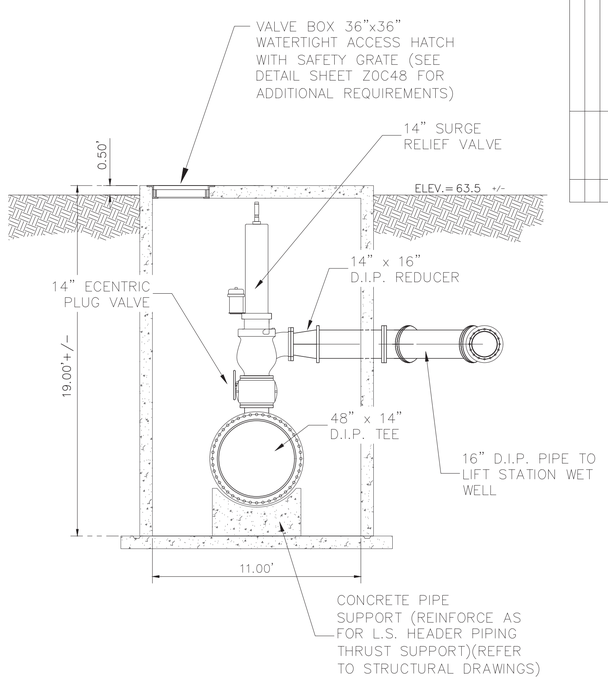

SECTION C–C (LOOKING WEST)

SCALE 1":4'

NOTES:

1. PRIOR TO CONSTRUCTION OF SURGE VALVE, SURGE VALVE VAULT, DIP PIPING AND DIP SPOOL PIECES, CONTRACTOR SHALL EXCAVATE THE 42" EXISTING FORCE MAIN TO DETERMINE THE EXACT DEPTH. THE ELEVATION OF THE 42" FORCE MAIN IN RELATION TO THE TOP SLAB OF THE LIFT STATION ALONG WITH THE HORIZONTAL LOCATION DIMENSIONALLY FROM THE LIFT STATION TO THE CENTERLINE OF THE 42" FORCE MAIN SHALL BE REPORTED TO THE ENGINEER.
2. NO FABRICATION OF SPOOL PIECES WILL BE PERMITTED UNTIL THE ENGINEER VERIFIES SHOP DRAWINGS SUBMITTED BY THE CONTRACTOR FOR REVIEW AND APPROVAL. IF IT BECOMES EVIDENT THE LENGTHS OF SPOOL PIECES AND TYPES OF FITTINGS VARY FROM SHOWN, THE CONTRACTOR SHALL PROVIDE SUCH FITTINGS TO ACHIEVE PROPER INSTALLATION AT NO ADDITIONAL COST TO THE CITY.
3. THE VALVE VAULT SHALL BE A PRECAST STRUCTURE, 6'x11' INSIDE DIMENSION AND APPROXIMATELY 19' FROM TOP SLAB TO INSIDE BOTTOM ELEVATION. NO CASTING OF VAULT IS PERMITTED UNTIL ITEMS 1 & 2 ABOVE HAVE BEEN PERFORMED. VARIATIONS IN DEPTH, AS REQUIRED FOR PROPER FITTING D.I.P. PIPING SHALL BE BOURNE BY THE CONTRACTOR.AT NO ADDITIONAL COST TO THE CITY.

0 1 2 3 ORIGINAL SCALE IN INCHES FOR REDUCED PLANS

NO.	DATE	REVISION	APP.

AMANI ENGINEERING, INC.
11011 RICHMOND AVENUE
SUITE 700
HOUSTON, TEXAS 77024
TEL: (713) 270-5700
TBPE REG. NO. F-4528
TBPELS REG. NO. 1028200

HATCH
750 TOWN & COUNTRY BLVD.
SUITE 650
HOUSTON, TEXAS 77024
P:832-930-7670
TX FIRM NUMBER: F-314

SURVEYED BY:
AMANI ENGINEERING,INC.
FB NO. P-6357

STATE OF TEXAS
DAVID L. BROWN
48282
REGISTERED PROFESSIONAL ENGINEER
8/11/2026

CITY OF HOUSTON
HOUSTON PUBLIC WORKS

LIFT STATION RENEWAL & REPLACEMENT PROJECT

BISSONNET #4 LIFT STATION
PROPOSED MECHANICAL
SURGE VALVE DETAIL

WBS NUMBER
R-000267-0173-4
DRAWING SCALE
Scale: AS SHOWN
CITY OF HOUSTON PM
N.K. NUPUR KRISHNAN, PE
SHEET NO. 104 OF 274

FOR CITY OF HOUSTON USE ONLY

HOUSTON PUBLIC WORKS
ACCEPTED AND FILED
82825
CITY DRAWING NUMBER
Approval Date 08/14/26
HOUSTON TX

N1M25

FILE NAME:
PLOTTED ON:

P:\Coa\y2024\24013 - Hatch - COH FY20 Lift Stations\CAD_DWG\Phase IV\6-Phase II BISSONNET #4\Phase II LS-BISSONNET #4.dwg

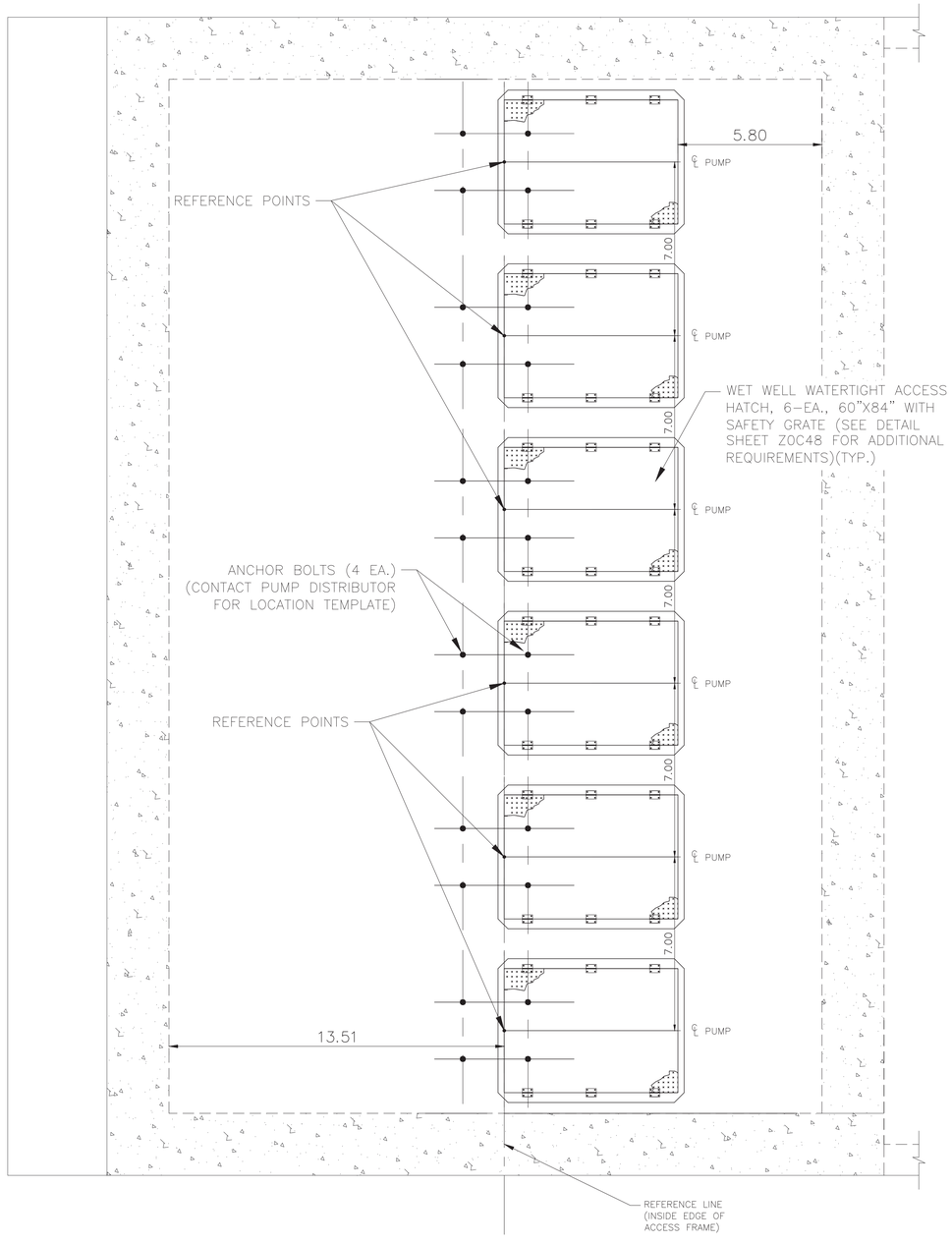

TOP VIEW

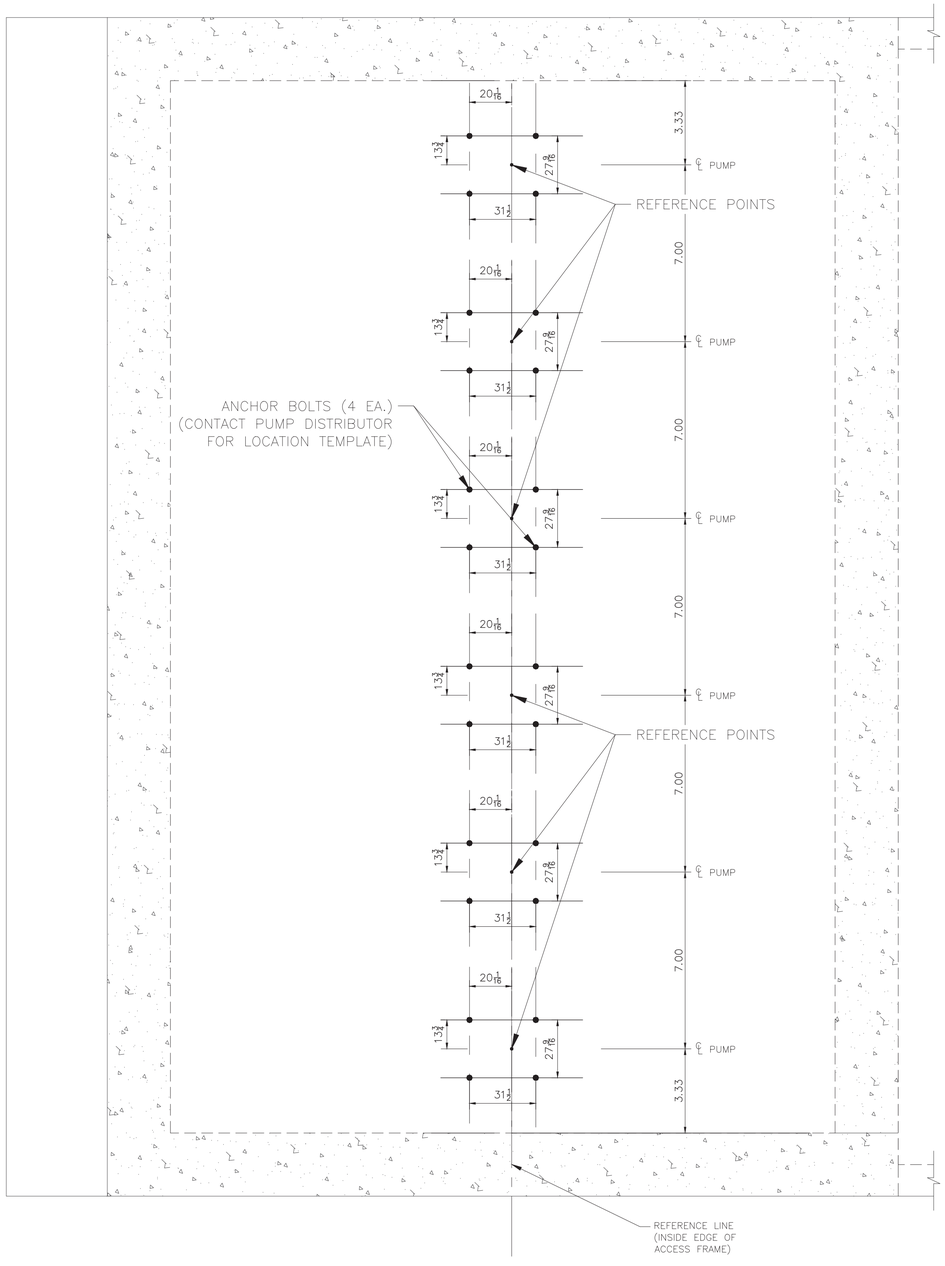

BASE SECTION

0 1 2 3 ORIGINAL SCALE IN INCHES FOR REDUCED PLANS

NO.	DATE	REVISION	APP.

AMANI ENGINEERING, INC.
11011 RICHMOND AVENUE
SUITE 700
HOUSTON, TEXAS 77024
TEL: (713) 270-5700
TBPE REG. NO. F-4528
TBPELS REG. NO. 1028200

HATCH
750 TOWN & COUNTRY BLVD.
SUITE 650
HOUSTON, TEXAS 77024
P:832-930-7670
TX FIRM NUMBER: F-314

SURVEYED BY:
AMANI ENGINEERING,INC.
FB NO. P-6357

STATE OF TEXAS
DAVID L. BROWN
48282
REGISTERED PROFESSIONAL ENGINEER
8/11/2026

CITY OF HOUSTON
HOUSTON PUBLIC WORKS

LIFT STATION RENEWAL & REPLACEMENT PROJECT

BISSONNET #4 LIFT STATION PROPOSED MECHANICAL TOP VIEW/BASE SECTION

WBS NUMBER
R-000267-0173-4
DRAWING SCALE
Scale 1"=3'
CITY OF HOUSTON PM
N.K. NUPUR KRISHNAN, PE
SHEET NO. 105 OF 274

FOR CITY OF HOUSTON USE ONLY

HOUSTON PUBLIC WORKS
ACCEPTED AND FILED
82825
CITY DRAWING NUMBER
Approval Date 08/14/26
HOUSTON TX

N1M26

FILE NAME:
PLOTTED ON:

P:\Condi\2024\24013 - Hatch - COH FY20 Lift Stations\CAD_DWG\Phase III\6-Phase II BISSONNET #4\Phase II LS-BISSONNET #4.dwg

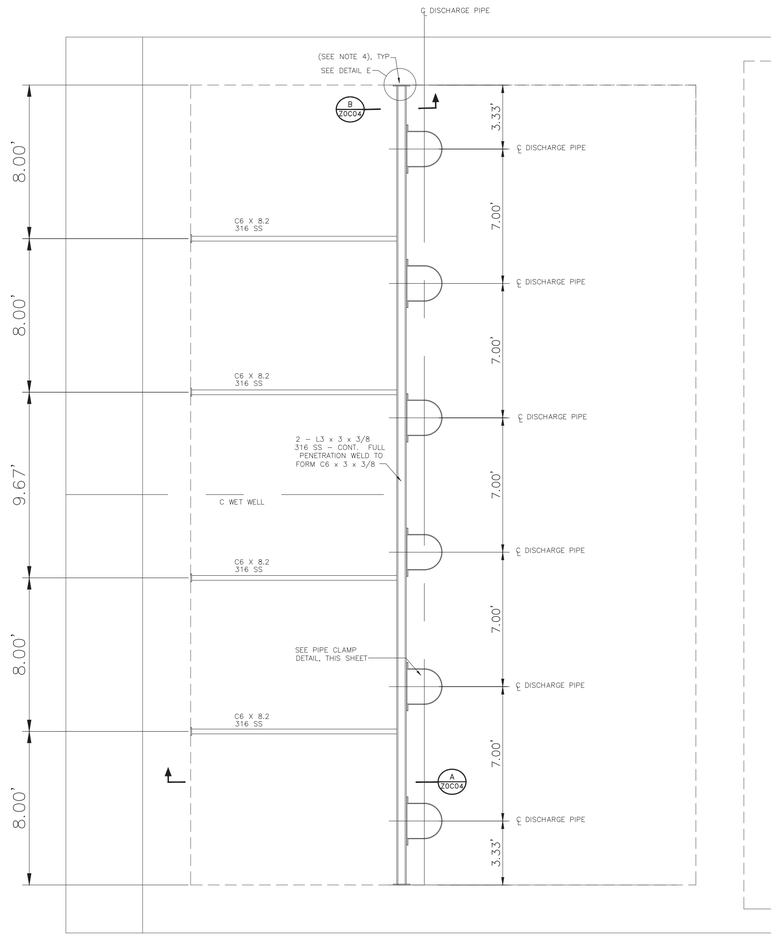

PLAN BELOW GRADE
SCALE 1":4'

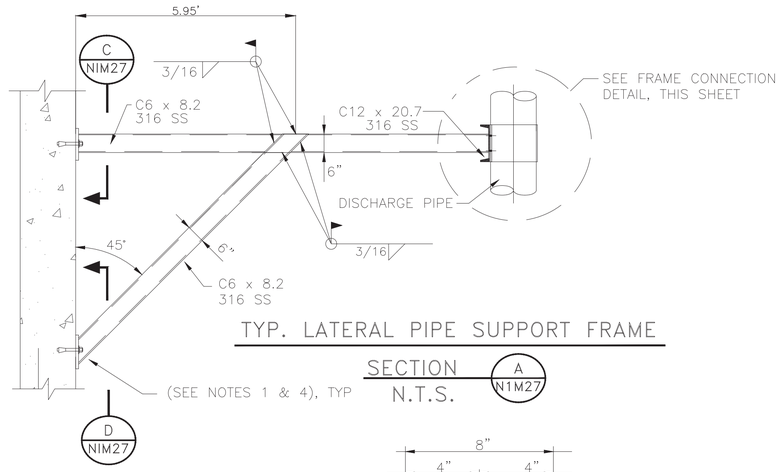

TYP. LATERAL PIPE SUPPORT FRAME
SECTION A N1M27
N.T.S.

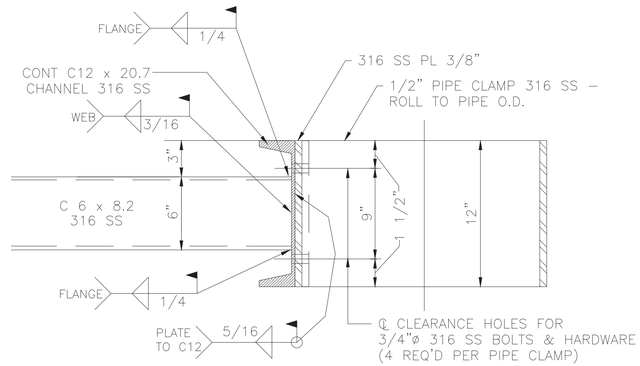

FRAME CONNECTION DETAIL
N.T.S.

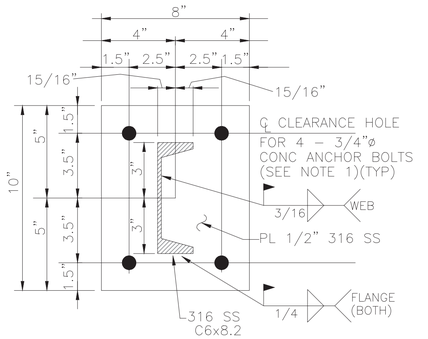

SECTION C N1M27
N.T.S.

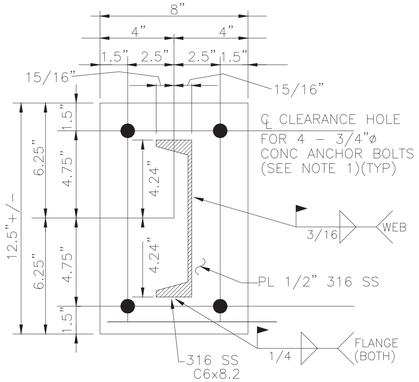

SECTION D N1M27
N.T.S.

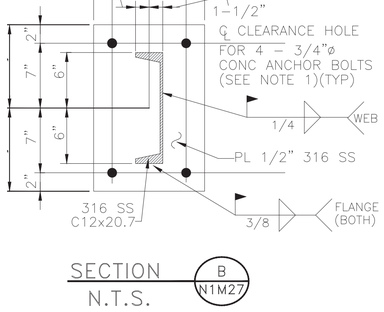

SECTION B N1M27
N.T.S.

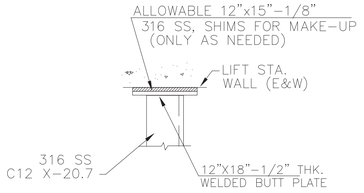

DETAIL E
N.T.S.

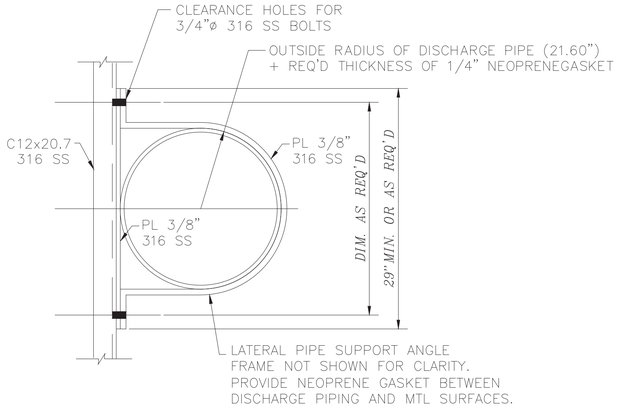

PIPE CLAMP DETAIL
N.T.S.

NOTES:

1. CONCRETE ANCHOR SHALL BE DRILLED AND EPOXIED HILTI HAS SYSTEM OR EQUAL, SHALL HAVE 8" MINIMUM EMBEDMENT AND SHALL BE TYPE 316 STAINLESS STEEL.
2. SEE LIFT STATION AND STRUCTURAL DRAWINGS FOR DIMENSIONS AND INFORMATION NOT SHOWN ON THIS SHEET.
3. SET 1/4" NEOPRENE GASKET ON WALL SURFACE IN SIKA 1A (OR EQUAL) SEALANT AT ALL BRACING ATTACHMENTS.

NO.	DATE	REVISION	APP.

AMANI ENGINEERING, INC.
11011 RICHMOND AVENUE
SUITE 700
HOUSTON, TEXAS 77024
TEL: (713) 270-5700
TBPE REG. NO. F-4528
TBPELS REG. NO. 1028200

HATCH
750 TOWN & COUNTRY BLVD.
SUITE 650
HOUSTON, TEXAS 77024
P:832-930-7670
TX FIRM NUMBER: F-314

SURVEYED BY:
AMANI ENGINEERING,INC.
FB NO. P-6357

STATE OF TEXAS
DAVID L. BROWN
48282
REGISTERED
PROFESSIONAL
ENGINEER
8/11/2026

CITY OF HOUSTON
HOUSTON PUBLIC WORKS

LIFT STATION RENEWAL & REPLACEMENT PROJECT

BISSONNET #4 LIFT STATION
PROPOSED MECHANICAL DISCHARGE
PIPING SUPPORT DETAILS

WBS NUMBER	FOR CITY OF HOUSTON USE ONLY
R-000267-0173-4	HOUSTON PUBLIC WORKS ACCEPTED AND FILED 82825 CITY DRAWING NUMBER Approval Date 08/14/26 HOUSTON TX
DRAWING SCALE	
Scale: AS SHOWN	
CITY OF HOUSTON PM	
N.K. NUPUR KRISHNAN, PE	
SHEET NO. 106 OF 274	

N1M27

FILE NAME:
PLOTTED ON:

0 1 2 3 ORIGINAL SCALE IN INCHES FOR REDUCED PLANS

P:\Cadd\2024\24013 - Hatch - COH FY26 Lift Stations\CAD_DWG\Phase II\6-Phase II BISSONNET #4\Phase II LS-BISSONNET #4.dwg

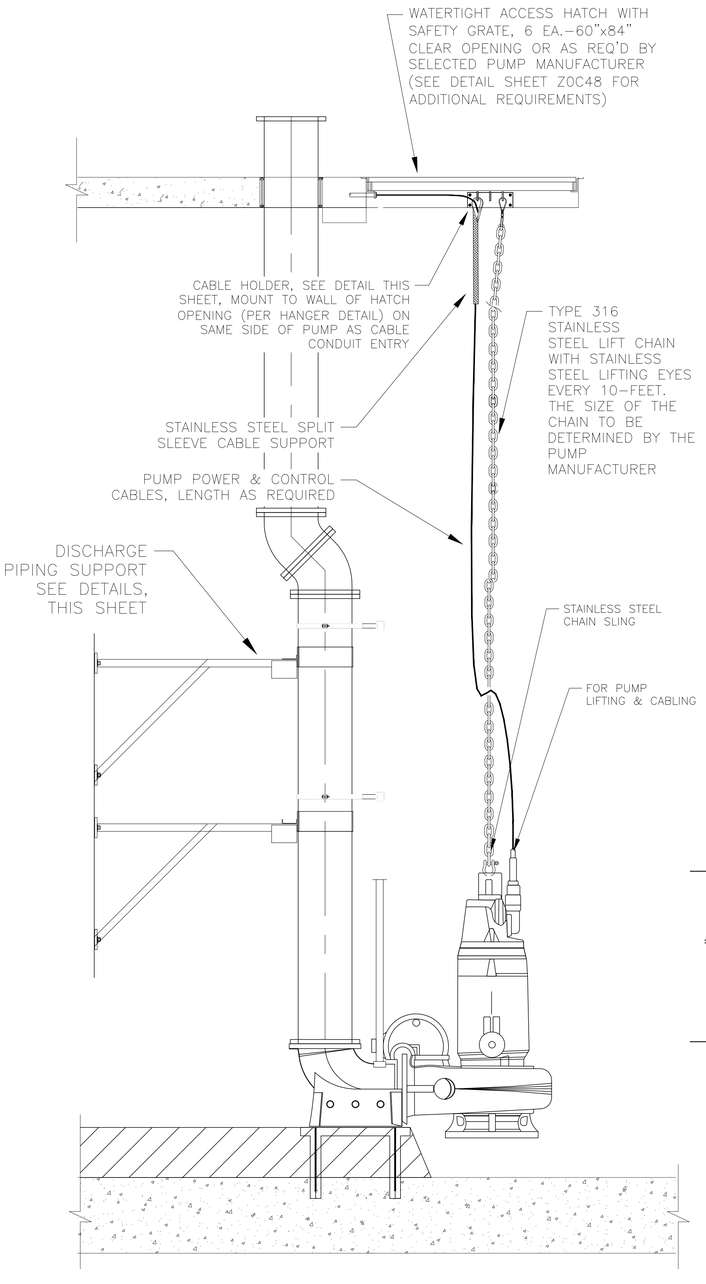

TYP DISCHARGE PIPING SUPPORT
PLAN FOR 6 PUMPS

DETAIL 3 / N1M28 — N.T.S.

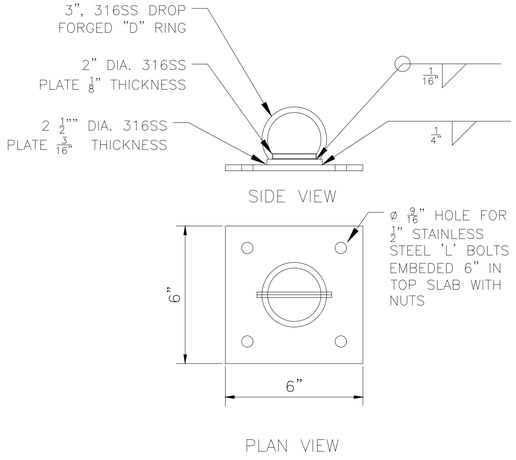

CB SERIES FALL PROTECTION CB–1B BOLT ANCHORED

DETAIL 1A / N1M28 — N.T.S.

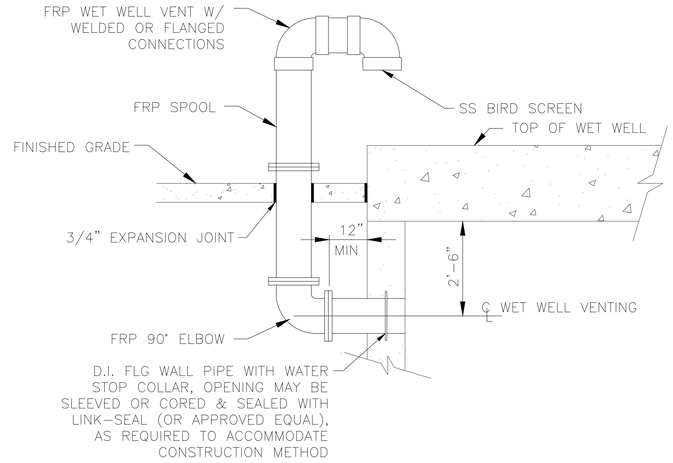

TYPICAL HIGH PROFILE
WET WELL VENTING INSTALLATION

DETAIL 1 / N1M28 — N.T.S.

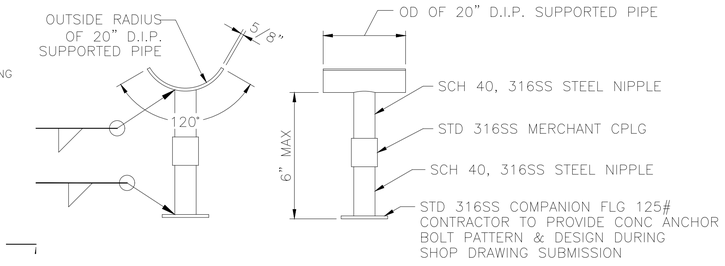

TYP ADJUSTABLE PIPE SUPPORT

DETAIL 2A / N1M28 — N.T.S.

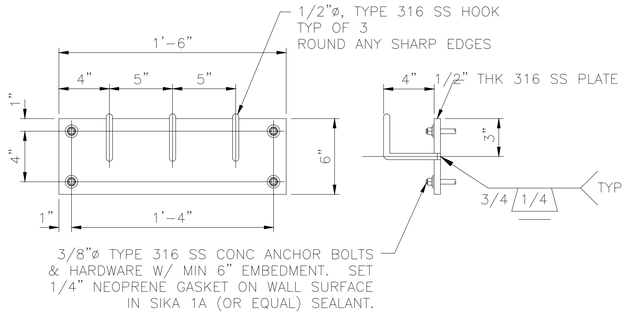

TYPICAL CABLE HOLDER ASSY

DETAIL 3A / N1M28 — N.T.S.

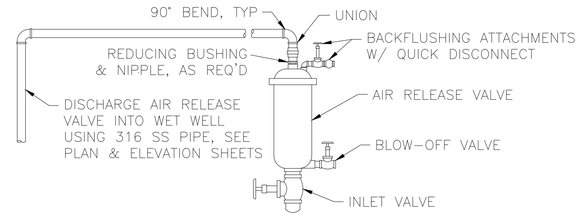

NOTE: PROVIDE STAINLESS STEEL VALVE BODY AND FITTINGS AS MAY BE REQUIRED BY SPECIFICATIONS

TYPICAL AIR RELEASE VALVE ASSY

DETAIL 10 / N1M28 — N.T.S.

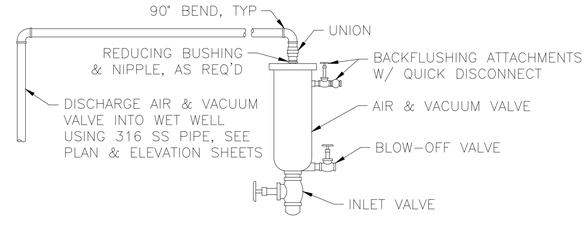

NOTE: PROVIDE STAINLESS STEEL VALVE BODY AND FITTINGS AS MAY BE REQUIRED BY SPECIFICATIONS

TYPICAL AIR & VACUUM VALVE ASSY

DETAIL 11 / N1M28 — N.T.S.

NO.	DATE	REVISION	APP.

AMANI ENGINEERING, INC.
11011 RICHMOND AVENUE
SUITE 700
HOUSTON, TEXAS 77024
TEL: (713) 270–5700
TBPE REG. NO. F–4528
TBPELS REG. NO. 1028200

HATCH
750 TOWN & COUNTRY BLVD.
SUITE 650
HOUSTON, TEXAS 77024
P:832–930–7670
TX FIRM NUMBER: F–314

SURVEYED BY:
AMANI ENGINEERING,INC.
FB NO. P–6357

STATE OF TEXAS
DAVID L. BROWN
48282
REGISTERED PROFESSIONAL ENGINEER
8/11/2026

CITY OF HOUSTON
HOUSTON PUBLIC WORKS

LIFT STATION RENEWAL & REPLACEMENT PROJECT

BISSONNET #4 LIFT STATION
PROPOSED MECHANICAL DETAILS

WBS NUMBER	FOR CITY OF HOUSTON USE ONLY
R–000267–0173–4	HOUSTON PUBLIC WORKS ACCEPTED AND FILED 82825 CITY DRAWING NUMBER Approval Date 08/14/26 HOUSTON TX
DRAWING SCALE	
Scale N.T.S.	
CITY OF HOUSTON PM	
N.K. NUPUR KRISHNAN, PE	
SHEET NO. 107 OF 274	

N1M28

FILE NAME:
PLOTTED ON:

ORIGINAL SCALE IN INCHES FOR REDUCED PLANS
0 1 2 3

P:\Cad\2024\24013 - Hatch - COH FY26 Lift Stations\CAD_DWG\Phase IV\6-Phase II BISSONNET #4\Phase II LS-BISSONNET #4.dwg

BISSONNET #4
LIFT STATION
2-ADF PUMPS ONLY

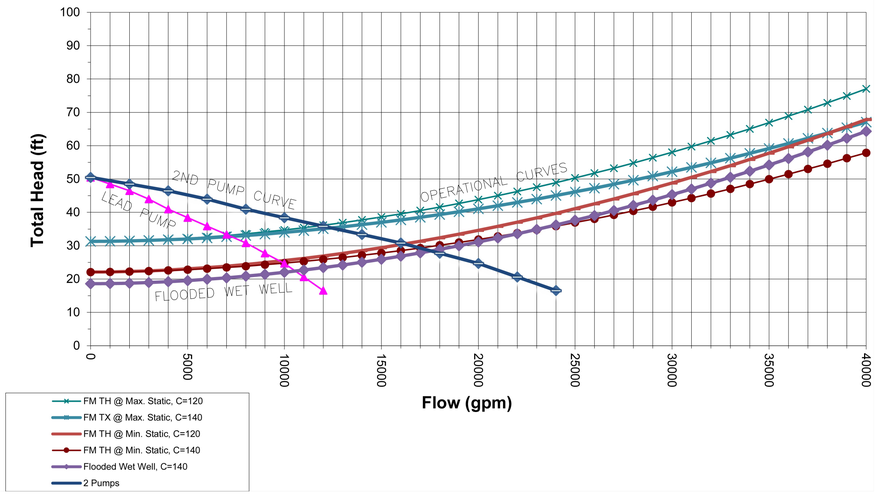

BISSONNET #4
LIFT STATION
3-WET WEATHER PUMPS ONLY

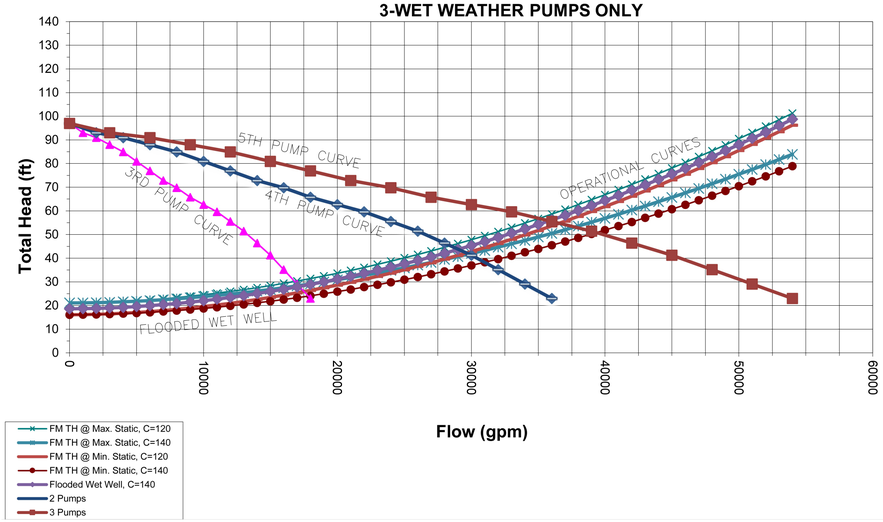

PUMP CHARACTERISTICS	PUMP NO. 1	PUMP NO. 2	PUMP NO. 3	PUMP NO. 4	PUMP NO. 5	PUMP NO. 6
MOTOR DATA NOMINAL SIZE (HP) MAX SPEED (RPM)	 90 500	 90 500	 215 595	 215 595	 215 595	 215 595
SOLIDS PASSAGE MIN SPHERE (IN)	 3	 3	 3	 3	 3	 3
CAPACITY (GPM) DESIGN RUNOUT	 7000 12000	 7000 12000	 17000 18000	 17000 18000	 17000 18000	 17000 18000
DISCHARGE HEAD (FT) DESIGN RUNOUT SHUT OFF	 32 14 50	 32 14 50	 30 22 96	 30 22 96	 30 22 96	 30 22 96
EFFICIENCY (%) DESIGN	 84	 84	 85	 85	 85	 85
NPSHR (FT) DESIGN RUNOUT	 7 17	 7 17	 11 40	 11 40	 11 40	 11 40
PUMP CYCLE TIME (MIN)	10+	10+	15+	15+	15+	15+
CUMMULATIVE CAP.* (GPM)	7000	16000	17000	28500	36000	STANDBY

PUMP DATA TABLE

* CUMMULATIVE CAPACITY IS THE DUTY POINT WHEN ALL PUMPS IN THE OPERATIONAL CYCLE ARE BEING CALLED.

NOTE: ALL PUMPS TO BE PROVIDED WITH COOLING JACKETS TO ALLOW LOWERING WET WELL LEVEL TO "ALL PUMPS OFF" SETTING

BISSONNET #4
LIFT STATION
2-ADF + 1-WWF PUMPS

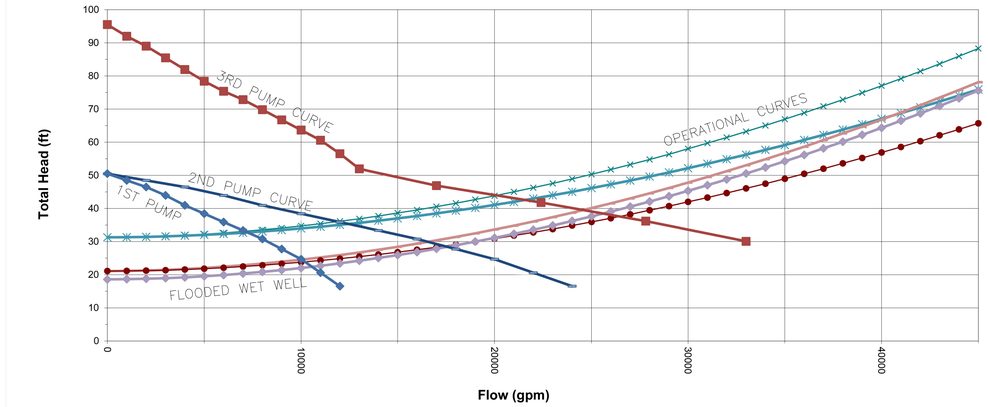

STATION OPERATION TABLES

	RISING LEVEL CYCLE – DRY WEATHER PUMPS

WATER LEVEL DEPTH	WATER LEVEL ELEVATION	ACTION	PUMP(S) IN OPERATION
5.00	36.00	PUMPS OFF LEVEL – NO ACTION	ALL PUMPS ARE OFF
13.20	44.20	LEAD PUMP TURNS ON	LEAD (90HP) PUMP ON
14.20	45.20	2ND PUMP TURNS ON	LEAD & 2ND (90HP) PUMPS ON

	FALLING LEVEL CYCLE – DRY WEATHER PUMPS

WATER LEVEL DEPTH	WATER LEVEL ELEVATION	ACTION	PUMP(S) IN OPERATION
13.20	44.20	LEAD PUMP TURNS ON	LEAD (90HP) PUMP ON
5.00	36.00	HIGH WATER ALARM OFF	ALL PUMPS OFF – 2ND PUMP SWITCHES TO LEAD PUMP
4.50	35.50	LOW LEVEL ALARM	–

	RISING LEVEL CYCLE – WET WEATHER PUMPS

WATER LEVEL DEPTH	WATER LEVEL ELEVATION	ACTION	PUMP(S) IN OPERATION
5.00	36.00	PUMPS OFF LEVEL – NO ACTION	ALL PUMPS ARE OFF
13.20	44.20	LEAD PUMP TURNS ON	LEAD (90HP) PUMP ON
14.20	45.20	2ND PUMP TURNS ON	LEAD & 2ND (90HP) PUMPS ON
18.20	49.20	3RD PUMP (LEAD WET WEATHER PUMP) TURNS ON	LEAD & 2ND (90HP) & 3RD (215HP) PUMPS ON
19.20	50.20	4TH PUMP TURNS ON LEAD & 2ND (90HP) PUMPS OFF	3RD & 4TH (215HP) PUMPS ON
20.20	51.20	5TH PUMP TURNS ON	3RD, 4TH & 5TH (215HP) PUMPS ON
21.00	52.00	HIGH WATER ALARM ON	HIGH WATER ALARM SOUND
23.00	54.00	HIGH HIGH WATER ALARM ON (FLOAT ON LEVEL)	ALL (215HP) PUMPS ON ALL (90HP) PUMPS OFF

	FALLING LEVEL CYCLE – WET WEATHER PUMPS

WATER LEVEL DEPTH	WATER LEVEL ELEVATION	ACTION	PUMP(S) IN OPERATION
23.00	54.00	FLOAT LEVEL OFF	3RD, 4TH & 5TH (215HP) PUMPS OFF (FLOATS)
21.00	52.00	HIGH WATER ALARM OFF	3RD, 4TH & 5TH (215HP) PUMPS ON
19.20	50.20	3RD PUMP (215HP) TURNS OFF	4TH & 5TH (215HP) PUMPS ON
18.20	49.20	4TH PUMP (215HP) TURNS OFF LEAD & 2ND PUMPS (90HP) TURN ON	5TH (215HP), LEAD & 2ND (90HP) PUMPS ON
14.20	45.20	5TH PUMP (215HP) TURNS OFF	LEAD & 2ND (90HP) PUMPS ON
13.20	44.20	2ND PUMP TURNS OFF	LEAD (90HP) PUMP ON
5.00	36.00	LEAD PUMP (90HP) TURNS OFF	ALL PUMPS OFF – 2ND PUMP SWITCHES TO LEAD & STANDBY PUMP SWITCHES TO THIRD
4.50	35.50	LOW LEVEL ALARM	–

NO.	DATE	REVISION	APP.

AMANI ENGINEERING, INC.
11011 RICHMOND AVENUE
SUITE 700
HOUSTON, TEXAS 77024
TEL: (713) 270-5700
TBPE REG. NO. F-4528
TBPELS REG. NO. 1028200

HATCH
750 TOWN & COUNTRY BLVD.
SUITE 650
HOUSTON, TEXAS 77024
P:832-930-7670
TX FIRM NUMBER: F-314

SURVEYED BY:
AMANI ENGINEERING,INC.
FB NO. P-6357

STATE OF TEXAS
DAVID L. BROWN
48282
REGISTERED PROFESSIONAL ENGINEER
8/11/2026

CITY OF HOUSTON
HOUSTON PUBLIC WORKS

LIFT STATION RENEWAL & REPLACEMENT PROJECT

BISSONNET #4 LIFT STATION
PUMP CURVE

WBS NUMBER
R-000267-0173-4
DRAWING SCALE
Scale: N.T.S.
CITY OF HOUSTON PM
N.K. NUPUR KRISHNAN, PE
SHEET NO. 108 OF 274

FOR CITY OF HOUSTON USE ONLY
HOUSTON PUBLIC WORKS
ACCEPTED AND FILED
82825
CITY DRAWING NUMBER
Approval Date 08/14/26
HOUSTON TX

N1M29

FILE NAME:
PLOTTED ON:

ORIGINAL SCALE IN INCHES
FOR REDUCED PLANS
0 1 2 3

P:\Corda\2024\24013 - Hatch - COH FY26 Lift Stations\CAD_DWG\Phase IV\6-Phase II BISSONNET #4\Phase II LS-BISSONNET #4.dwg

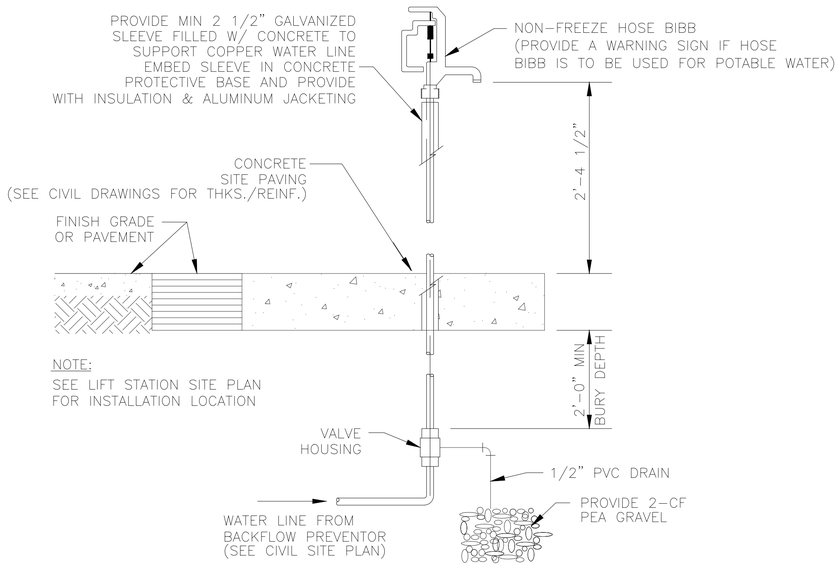

NON-FREEZE HOSE BIBB DETAIL

N.T.S.

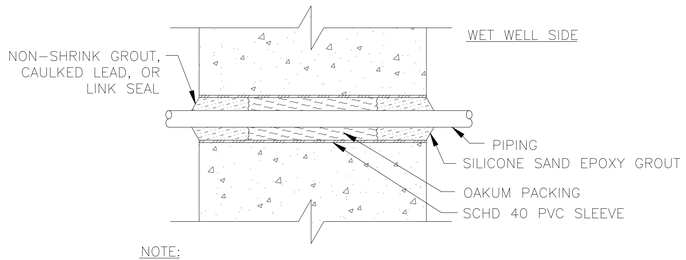

NOTE:
SLEEVED WET WELL PENETRATION IS NOT TO BE USED FOR CONDUIT INSTALLATION. SEE ELECTRICAL DETAIL SHEETS FOR CONDUIT PENETRATIONS.

SLEEVED WET WELL PENETRATION FOR PIPING 4"ø & SMALLER

DETAIL 6 N1M30

N.T.S.

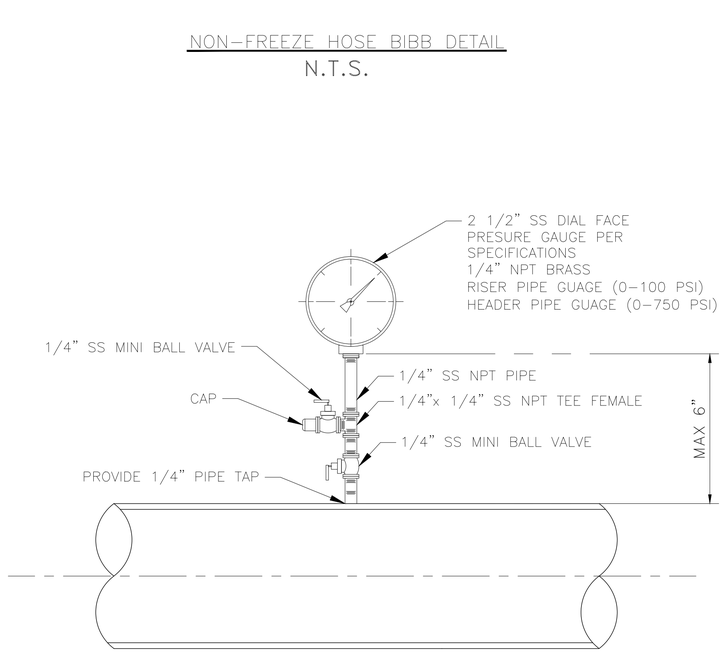

NOTE: ALL FITTINGS SHALL BE STAINLESS STEEL (316)

PRESSURE GAUGE DETAIL

DETAIL 15 N1M30

N.T.S.

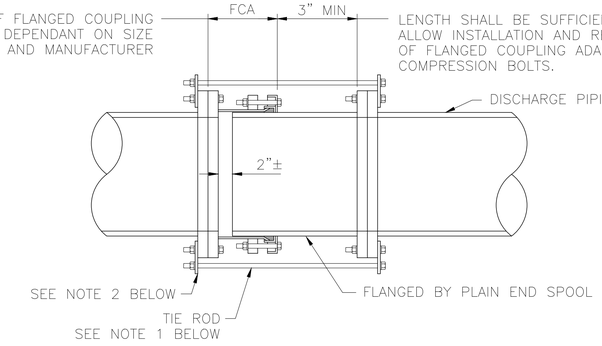

NOTES:

1. PROVIDE A NUMBER OF TIE RODS EQUAL TO 1/2 THE NUMBER OF FLANGE BOLTS. EVENLY SPACE INSTALLATION OF TIE RODS. DIAMETER OF TIE RODS TO BE EQUAL TO THE DIAMETER OF FLANGE BOLTS. LENGTH OF TIE RODS TO BE DETERMINED BY CONTRACTOR BASED ON SIZE AND MANUFACTURER OF FLANGED COUPLING ADAPTOR AND FINAL LENGTH OF SPOOL PIECE.
2. PROVIDE 316 SS TAB FOR ATTACHMENT OF TIE RODS. SIZE TO BE DETERMINED BY CONTRACTOR.
3. CONTRACTOR TO SUBMIT DETAILS DURING SHOP DRAWING SUBMISSION.
4. ALL HARDWARE SHALL BE 316 STAINLESS STEEL. TIE RODS SHOULD BE THREADED.
5. THIS RESTRAINT DOES NOT REPLACE THRUST BLOCKS TO BE PROVIDED AT OTHER LOCATIONS.

FLANGED COUPLING ADAPTOR RESTRAINT DETAIL

DETAIL 14 N1M30

N.T.S.

NO	DATE	REVISION	APP
A	06/23/25	INTERNAL REVISION	LL
B	10/30/25	CLIENT REVIEW	LL

AMANI ENGINEERING, INC.
11011 RICHMOND AVENUE SUITE 700 HOUSTON, TEXAS 77024
TEL: (713) 270-5700
TBPE REG. NO. F-4528
TBPELS REG. NO. 1028200

HATCH
750 TOWN & COUNTRY BLVD. SUITE 650 HOUSTON, TEXAS 77024
P:832-930-7670
TX FIRM NUMBER: F-314

SURVEYED BY:
AMANI ENGINEERING,INC.
FB NO. P-6357

STATE OF TEXAS DAVID L. BROWN 48282 REGISTERED PROFESSIONAL ENGINEER
8/11/2026

CITY OF HOUSTON
HOUSTON PUBLIC WORKS

LIFT STATION RENEWAL & REPLACEMENT PROJECT

BISSONNET #4 LIFT STATION
PROPOSED MECHANICAL DETAILS

WBS NUMBER	R-000267-0173-4
DRAWING SCALE	Scale N.T.S.
CITY OF HOUSTON PM	N.K. NUPUR KRISHNAN, PE

FOR CITY OF HOUSTON USE ONLY
HOUSTON PUBLIC WORKS
ACCEPTED AND FILED
82825
CITY DRAWING NUMBER
Approval Date 08/14/26
HOUSTON TX

N1M30

SHEET NO. 109 OF 274

FILE NAME:
PLOTTED ON:

0 1 2 3 ORIGINAL SCALE IN INCHES FOR REDUCED PLANS

P:\Cadd\2024\24013 - Hatch - COH FY26 Lift Stations\CAD_DWG\Phase II\6-Phase II BISSONNET #4\Phase II LS-BISSONNET #4.dwg

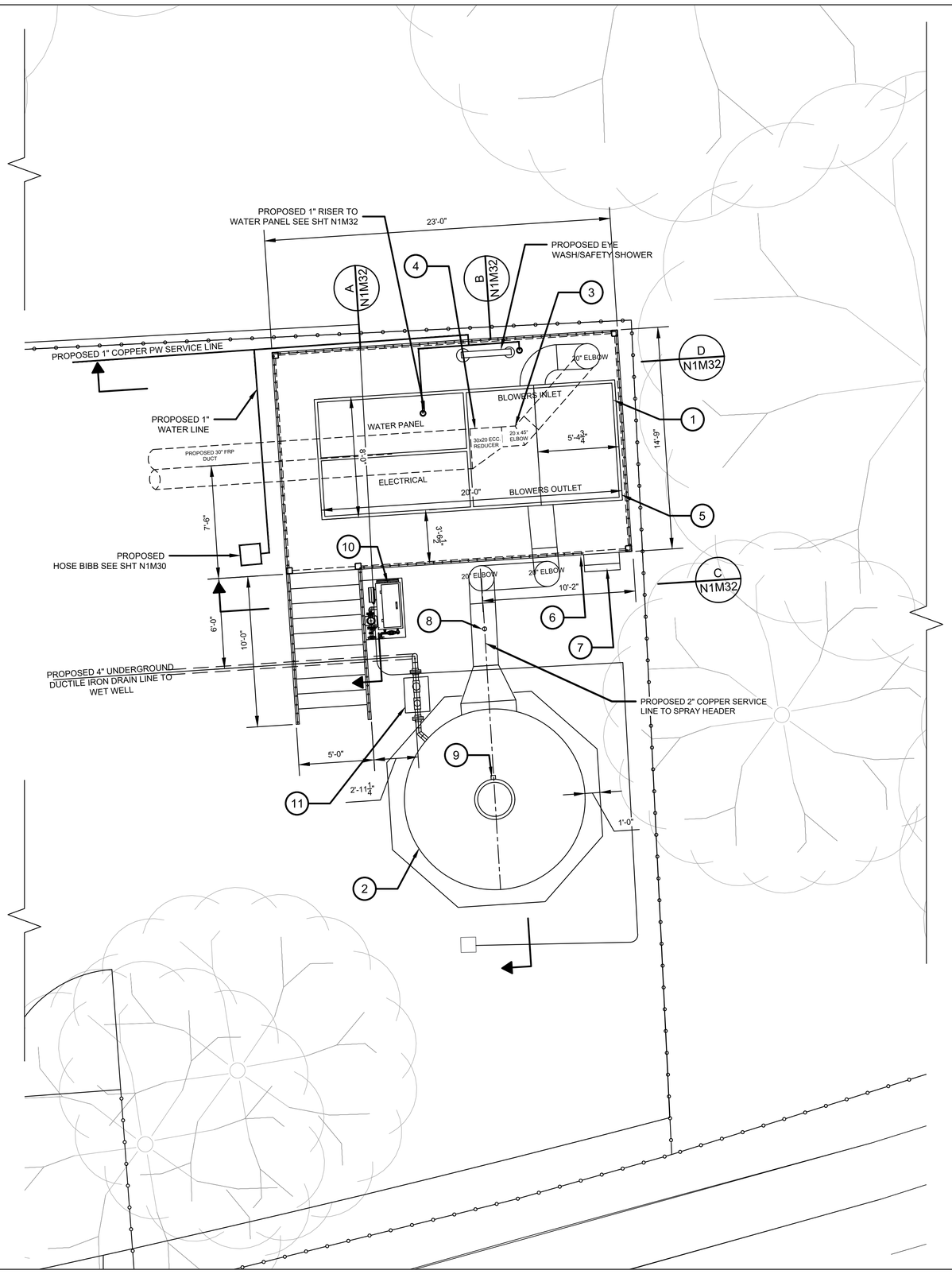

#	KEY NOTE:
1	BIOFILTER BLOWER AND CONTROL SKID, COMPLETE WITH BLOWERS, ELECTRICAL PANEL, CONTROL PANEL, WATER VALVES AND CONTROL SYSTEMS
2	12' DIA. BIO-TRICKLING FILTER SHELL.
3	20" DIA. 45° FRP ELBOW.
4	30"X20" FRP ECCENTRIC REDUCER
5	℄ HANDRAIL.
6	ELEVATED SUPPORT/ACCESS PLATFORM, REF.
7	LADDER.
8	AIR FLOW METER.
9	H2S METER.
10	START-UP EQUIPMENT. (TEMPORARY)
11	WATERLOCK FOR pH MEASUREMENT, PER VENDOR SPECIFICATIONS

N

NOTE:

EQUIPMENT SELECTION AND CONFIGURATION MAY VARY WITH SELECTED VENDOR OFFERING. CONTRACTOR TO SUBMIT VENDOR DRAWINGS FOR ENGINEERING REVIEW AND APPROVAL, HIGHLIGHTING ANT REQUESTED VARIANCES FROM THESE PLANS.

NO.	DATE	REVISION	APP.

0 5 10 Feet

HATCH
750 TOWN & COUNTRY BLVD
SUITE 650
HOUSTON, TX 77024
P: 832-930-7670
TX FIRM NUMBER: F-314

STATE OF TEXAS
LARRY LINGUIST
118136
LICENSED PROFESSIONAL ENGINEER
07/22/26

CITY OF HOUSTON
HOUSTON PUBLIC WORKS

LIFT STATION RENEWAL & REPLACEMENT PROJECT
BISSONNET #4 LS
PROPOSED ODOR CONTROL SYSTEM
GENERAL ARRANGEMENT–PLAN VIEW

WBS NUMBER	FOR CITY OF HOUSTON USE ONLY
R-000267-0173-4	HOUSTON PUBLIC WORKS ACCEPTED AND FILED 82825 CITY DRAWING NUMBER Approval Date 08/14/26 HOUSTON TX
DRAWING SCALE	
AS NOTED	
CITY OF HOUSTON PM	
NUPUR KRISHNAN, P.E. N.K.	
SHEET NO. 110 OF 274	

N1M31

PLOTTED: 7/21/2026 1:50 PM
PLOT STYLE: Coh.ctb
FILE PATH: C:\pwworking\hatch-dpd-south_central_us\dms51177\H374729-0100-240-271-0001.dwg

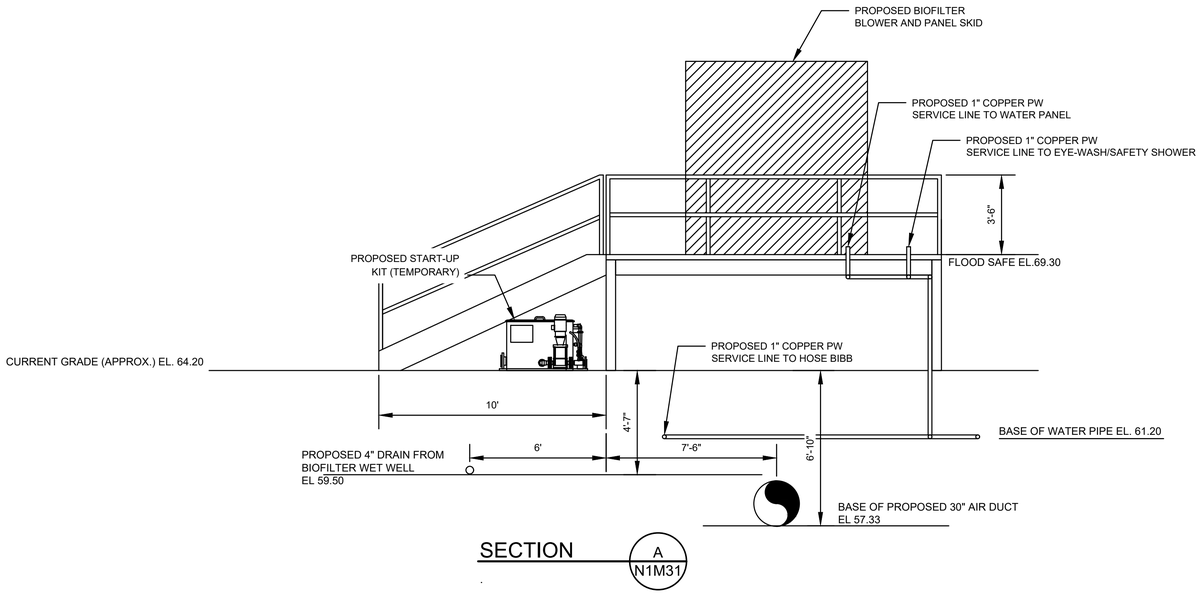

SECTION A N1M31

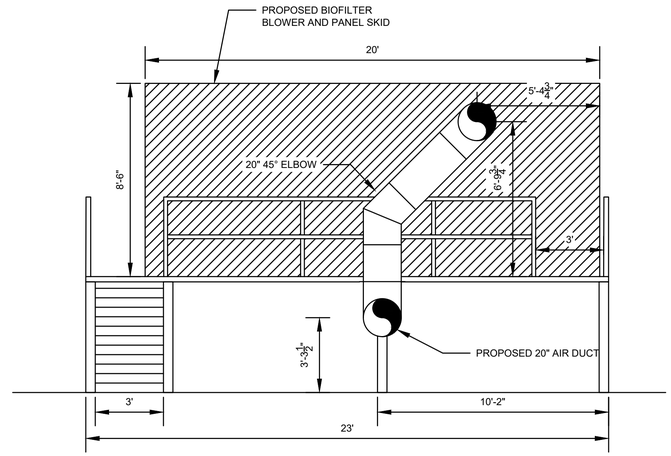

SECTION C N1M31

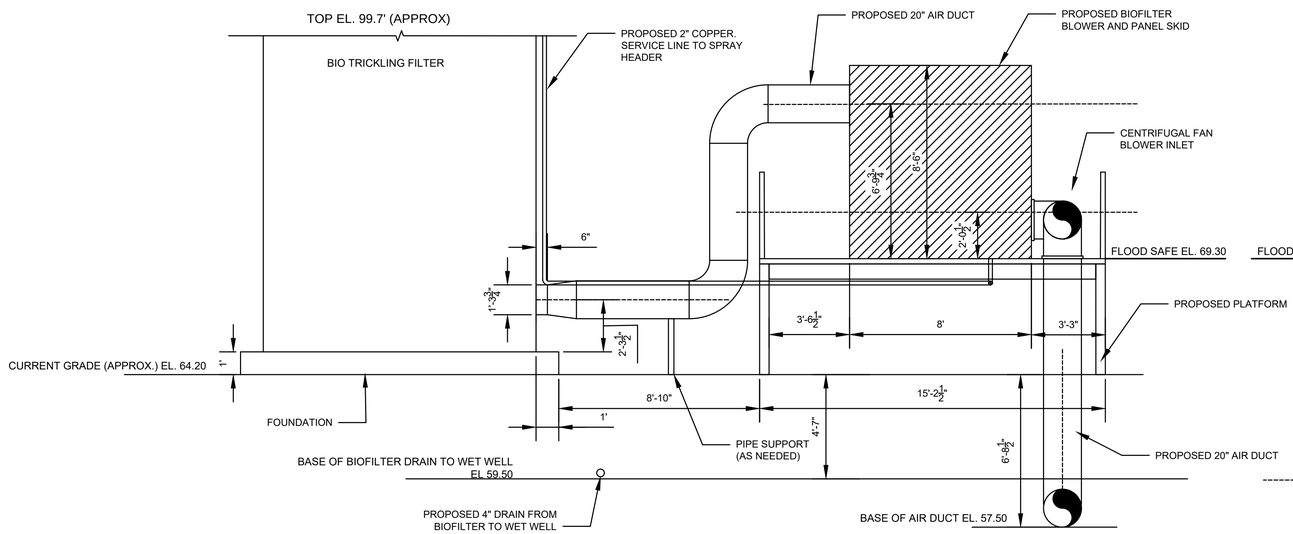

SECTION B N1M31

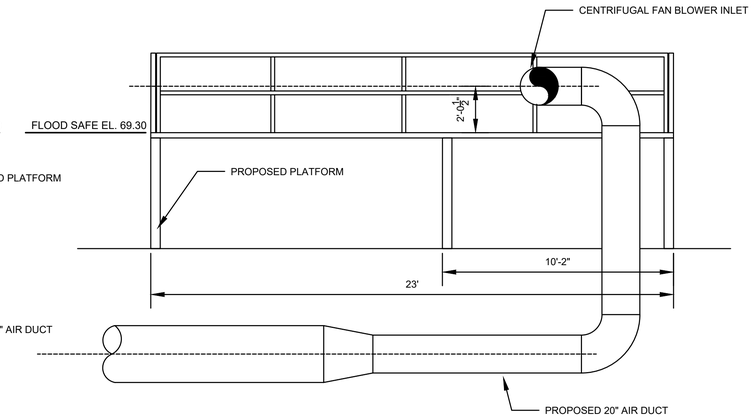

SECTION D N1M31

0 3 6 FEET

N1M32

NO.	DATE	REVISION	APP.

HATCH
750 TOWN & COUNTRY BLVD
SUITE 650
HOUSTON, TX 77024
P: 832-930-7670
TX FIRM NUMBER: F-314

STATE OF TEXAS
LARRY LINGUIST
118136
LICENSED
PROFESSIONAL ENGINEER
07/22/26

CITY OF HOUSTON
HOUSTON PUBLIC WORKS

LIFT STATION RENEWAL & REPLACEMENT PROJECT
BISSONNET #4 LS ODOR CONTROL
SECTION VIEW

WBS NUMBER	FOR CITY OF HOUSTON USE ONLY
R-000267-0173-4	HOUSTON PUBLIC WORKS ACCEPTED AND FILED 82825 CITY DRAWING NUMBER Approval Date 08/14/26 HOUSTON TX
DRAWING SCALE	
AS NOTED	
CITY OF HOUSTON PM	
NUPUR KRISHNAN, P.E. N.K.	
SHEET NO. 111 OF 274	

PLOTTED: 7/21/2026 10:56 AM
PLOT STYLE: Coh.ctb
FILE PATH: C:\pwworking\hatch-dpd-south_central_us\dms5117\H374729-0100-240-273-0001.dwg

NO.	DATE	REVISION	APP.

SHEET NOT USED

HATCH

750 TOWN & COUNTRY BLVD
SUITE 650
HOUSTON, TX 77024
P: 832-930-7670
TX FIRM NUMBER: F-314

SURVEYED BY:
AMANI ENGINEERING, INC.
FB NO. P-6357

STATE OF TEXAS
MARK G. SCALLY
136279
LICENSED PROFESSIONAL ENGINEER
8/7/26

CITY OF HOUSTON
HOUSTON PUBLIC WORKS

LIFT STATION RENEWAL & REPLACEMENT PROJECT

WBS NUMBER
R-000267-0173-4
DRAWING SCALE
AS NOTED
CITY OF HOUSTON PM
NUPUR KRISHNAN P.E. N.K.
SHEET NO. 112 OF 274

FOR CITY OF HOUSTON USE ONLY

HOUSTON PUBLIC WORKS
ACCEPTED AND FILED
82825
CITY DRAWING NUMBER
Approval Date 08/14/26
HOUSTON TX

N1M33

PLOT STYLE: COH.ctb
PLOTTED: 8/11/2026 10:17 AM
FILE PATH: \\wuspplot01\c$\Global ProjectWise Plotting - WUS\Queue 5\queue5.dwg

DRAWING LIMIT

(NOTE 20) TYP.
HH-1
(NOTE 14)
8 Z0E125
Y
100A 100B 100C 100D 100E 100F 100G 100H
(TYP.) 9 Z0E125
10 Z0E125
#2/0 AWG BARE COPPER GROUND COND. (TYP.) (NOTE 19)
X
Z
CONTROL BUILDING
(NOTE 9 & 11)
802 703 702 502 403 402 302 202 203 1002 1100 1105
HH-2
(NOTE 14)
8 Z0E125
10 Z0E125
6D Z0E124
6B Z0E124
6A Z0E124
16 Z0E126
LIGHT FIXTURE (F1)
5 Z0E124
(NOTE 10)
5'-6"
100E 100F 100G 100H
100A 100B 100C 100D
100
(TYP.) 12 Z0E125
ELECTRIC SERVICE POLE (PROPOSED)
1102 1101 1104 1106
1103
1108
1107
1102 1101 1104 1106
1102
1101
1106
1104
105A
105
HH-3
(NOTE 14)
8 Z0E125
10 Z0E125
1001
1003
1000
105
(NOTE 21)
LT-2 (NOTE 7)
FLOAT SWITCH (NOTE 7)
LT-1 (NOTE 7)
800 801 PUMP NO.6 (NOTE 13)
700 701 PUMP NO.5 (NOTE 13)
500 501 PUMP NO.4 (NOTE 13)
400 401 PUMP NO.3 (NOTE 13)
300 301 PUMP NO.2 (NOTE 13)
200 201 PUMP NO.1 (NOTE 13)
BISSONNET LIFT STATION
SC.: 1/4"=1'-0"
#2/0 AWG BARE COPPER GROUND COND. (TYP.) (NOTE 19)
(TYP.) 12 Z0E125
BIOSCRUBBER PLATFORM
(NOTE 15)
WCP
ELECTRICAL CONTROL PANEL
604
(NOTE 20) TYP.
POWER JUNCTION BOX (PROPOSED)
CONTROL JUNCTION BOX (PROPOSED)
(NOTE 14)
16 Z0E126
LIGHT FIXTURE (F1)
1106
105 105A
W
DRAWING LIMIT
TRUE NORTH
OVERHEAD SERVICE LINE
EXISTING SERVICE POLE
19 Z0E128
#2/0 AWG BARE COPPER GROUND COND. (TYP.) (NOTE 19)
DRAWING LIMIT
LIGHT FIXTURE (G2)
LIGHT & COMMUNICATION POLE (PROPOSED)
(TYP.) 9 Z0E125
15 Z0E126
(NOTE 20) TYP.
(NOTE 18) TYP.
A N1E02
DRAWING LIMIT

DUCT BANK
SECTION W NTS.
105 105A
DUCT BANK
SECTION X NTS.
1102 1101 1104 1106
DUCT BANK
SECTION Y NTS.
100A 100B 100C 100D 100E 100F 100G 100H
DUCT BANK
SECTION Z NTS.
202 402 502 703 203 1100 1002 1105 302 802 403 702

No.	DESCRIPTION
1	GENERATOR DISCONNECT
2	SERVICE DISCONNECT
3	CT CAN
4	UTILITY METER
5	WEATHER PROOF GFI
6	LEVEL TRANSMITTER J-BOX
7	PUMP NO.1 J-BOX
8	PUMP NO.2 J-BOX
9	PUMP NO.3 J-BOX
10	PUMP NO.4 J-BOX
11	PUMP NO.5 J-BOX
12	PUMP NO.6 J-BOX
13	PPU-AC PANEL
14	LIGHTING SWITCH

NOTES:

1. GROUNDING SHALL BE PER N.E.C. MINIMUM REQUIREMENTS.
2. THE ELECTRICAL INSTALLATION WITHIN THE WET WELL SHALL BE EXPLOSION PROOF IN ACCORDANCE WITH ARTICLE 510 OF THE NEC FOR CLASS I, DIVISION 1, GROUP C & D.
3. WHERE JUNCTION BOXES ARE SHOWN, THEY SHALL BE USED FOR PULLING OR TERMINATION PURPOSES ONLY. SPLICES WILL NOT BE ALLOWED EXCEPT AS PROVIDED BY NOTE 4 AND AT LIGHTING AND RECEPTACLE TERMINATIONS.
4. FOR MOTOR FEEDER AND CONTROL CABLES, INSTALL TYPE CSBE CABLE SEALING FITTING AT JUNCTION BOX ENTRANCE AND EXPLOSION PROOF SEAL IN CONDUITS TO CONTROL BUILDING OR PANEL.
5. TERMINATE PUMP POWER & CONTROL CONDUITS WITH CSBE SEAL. ATTACH STAINLESS STEEL SPLIT SLEEVE CABLE SUPPORT ON EACH POWER AND CONTROL CABLE
6. ALL PUMP POWER AND CONTROL CABLE LEADS MUST BE THE SAME LENGTH REGARDLESS OF PUMP LOCATION FROM TERMINAL/JUNCTION BOX.
7. LEVEL TRANSMITTERS AND FLOAT SWITCH SHOWN IN APPROXIMATE LOCATION. ACTUAL LOCATION SHALL FIELD VERIFY.
8. INSIDE WET WELL IS CLASSIFIED AS CLASS I, DIVISION 1. OUTSIDE WET WELL WITHIN 5 FEET OF WET WELL OPENINGS ARE CLASSIFIED AS CLASS I, DIVISION 2.
9. FOR CONTROL BUILDING EQUIPMENT AND CONDUIT ARRANGEMENT SEE DRAWING NO. N1E42.
10. THE JUNCTION BOX RACK MUST BE AT LEAST 12' WIDE.
11. TO SEE THE GROUNDING CONNECTION OF THE CONTROL BUILDING AND THE ELECTRICAL & CONTROL EQUIPMENT, REFER TO DRAWING NO. N1E42A.
12. FOR ELECTRICAL CONDUIT SCHEDULE , SEE DRAWING NO. N1E61.
13. FOR MECHANICAL PLAN VIEW, SEE DRAWING No. N1M23.
14. BELOW SURFACE CONDUIT RUNS SHALL HAVE TOTAL BENDS EQUAL TO OR LESS THAN 270 DEGREES. INSTALL HANDHOLES AT GRADE LEVEL WHERE NECESSARY.
15. THE MECHANICAL ARRANGEMENT SHOWN FOR THE BIOSCRUBBER IS FOR REFERENCE ONLY. FOR FINAL ARRANGEMENT, REFER TO DRAWINGS N1M31 AND N1M32.
16. CONDUITS INSTALLED UNDER THE PLATFORM AND FIXED TO UNISTRUT SUPPORT.
17. GROUND FENCE USING #2/0 BARE COPPER CONDUCTOR AT FOUR CORNERS AND INTERMEDIATE POSTS AT INTERVALS NOT TO EXCEED 50 FEET.
18. PROVIDE FLEXIBLE BONDING JUMPERS ACROSS ALL GATE HINGES TO MAINTAIN CONTINUOUS GROUNDING.
19. GROUNDING LOOP SHALL BE BURIED 24" BELOW FINISHED GRADE.
20. EXOTHERMIC (THERMOWELD) CONNECTION OF #2/0 BARE COPPER GROUND CONDUCTOR TO REBAR.
21. CONDUIT WILL BE EMBEDDED IN THE TOP CONCRETE SLAB, NOT ON TOP OR BELOW THE SLAB.

NO.	DATE	REVISION	APP.

HATCH
750 TOWN & COUNTRY BLVD
SUITE 650
HOUSTON, TX 77024
P: 832-930-7670
TX FIRM NUMBER: F-314

SURVEYED BY:
AMANI ENGINEERING, INC.
FB NO. P-6357

STATE OF TEXAS
GUY N SEVERN
105809
LICENSED PROFESSIONAL ENGINEER
7/21/2026

CITY OF HOUSTON
HOUSTON PUBLIC WORKS

LIFT STATION RENEWAL & REPLACEMENT PROJECT
BISSONNET #4 LS

ELECTRICAL SITE PLAN

WBS NUMBER	FOR CITY OF HOUSTON USE ONLY
R-000267-0173-4	HOUSTON PUBLIC WORKS ACCEPTED AND FILED 82825 CITY DRAWING NUMBER Approval Date 08/14/26 HOUSTON TX
DRAWING SCALE	
AS NOTED	
CITY OF HOUSTON PM	
NUPUR KRISHNAN P.E. N.K.	
SHEET NO. 113 OF 274	

N1E40

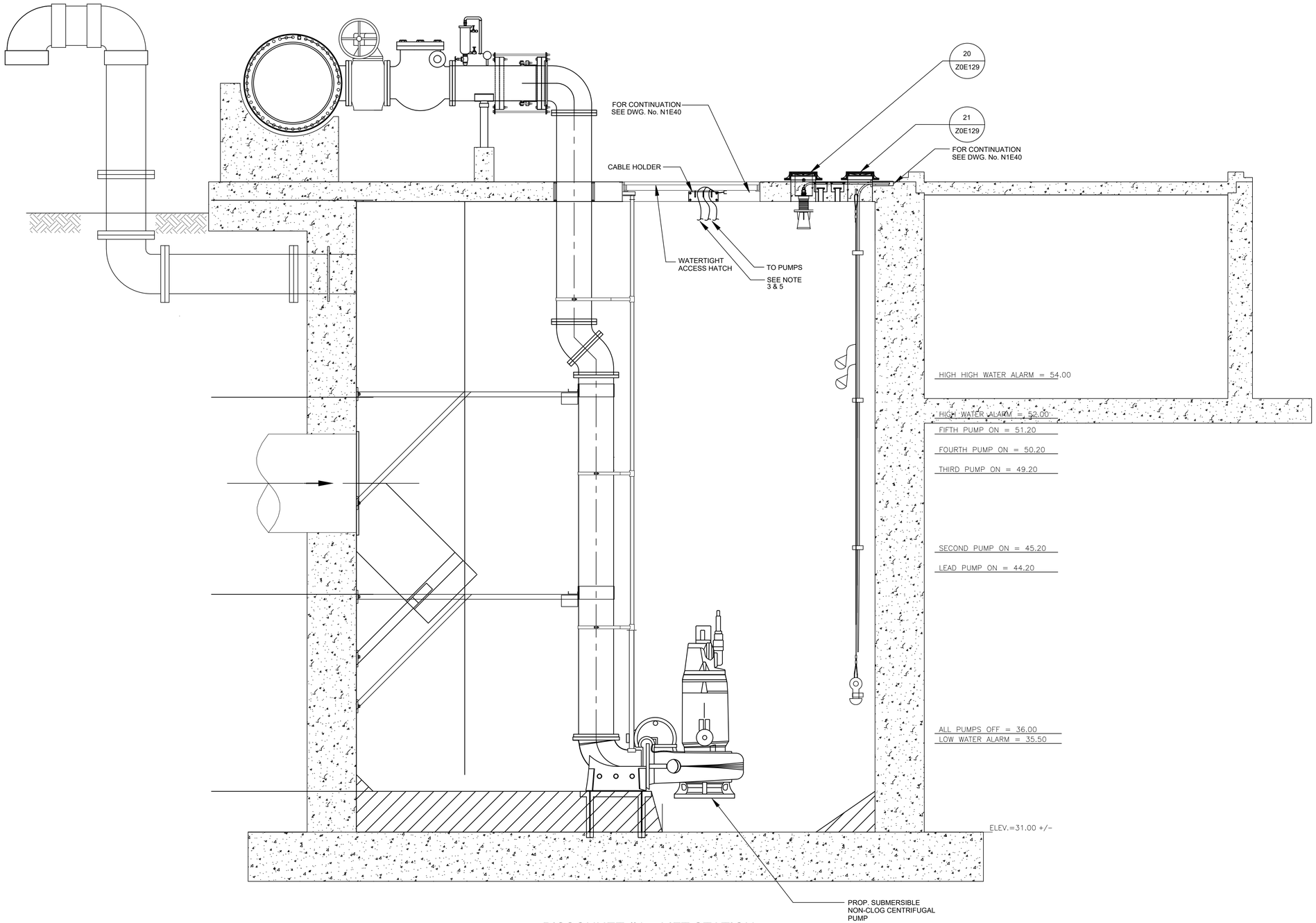

BISSONNET #4 - LIFT STATION

A / - ELEVATION

SC.: 3/8"=1'-0"

NOTES:

1. GROUNDING SHALL BE PER N.E.C. MINIMUM REQUIREMENTS.
2. THE ELECTRICAL INSTALLATION WITHIN THE WET WELL SHALL BE EXPLOSION PROOF IN ACCORDANCE WITH ARTICLE 510 OF THE NEC FOR CLASS I, DIVISION I, GROUP C & D.
3. ALL PUMP POWER AND CONTROL CABLE LEADS MUST BE THE SAME LENGTH REGARDLESS OF PUMP LOCATION FROM TERMINAL/JUNCTION BOX.
4. FOR MOTOR FEEDER AND CONTROL CABLES. INSTALL TYPE CSBE CABLE SEALING FITTING AT JUNCTION BOX ENTRANCE AND EXPLOSION PROOF SEAL IN CONDUITS TO POWER & CONTROL PANEL.
5. TERMINATE PUMP POWER & CONTROL CONDUITS WITH CSBE SEAL. ATTACH STAINLESS STEEL SPLIT SLEEVE CABLE SUPPORT ON EACH POWER AND CONTROL CABLE.
6. INSTRUMENTS SHOWN IN APPROXIMATE LOCATION. ACTUAL LOCATION SHALL BE CONFIRMED DURING CONSTRUCTION.
7. FOR MECHANICAL ELEVATION SECTION, SEE DRAWING No. N1M24.

NO.	DATE	REVISION	APP.

HATCH
750 TOWN & COUNTRY BLVD
SUITE 650
HOUSTON, TX 77024
P: 832-930-7670
TX FIRM NUMBER: F-314

SURVEYED BY:
AMANI ENGINEERING, INC.
FB NO. P-6357

STATE OF TEXAS
GUY N SEVERN
105809
LICENSED
PROFESSIONAL ENGINEER
7/21/2026

CITY OF HOUSTON

HOUSTON PUBLIC WORKS

LIFT STATION RENEWAL & REPLACEMENT PROJECT

BISSONNET #4 LS

LIFT STATION ELEVATION

WBS NUMBER	FOR CITY OF HOUSTON USE ONLY
R-000267-0173-4	HOUSTON PUBLIC WORKS ACCEPTED AND FILED 82825 CITY DRAWING NUMBER Approval Date 08/14/26 HOUSTON TX
DRAWING SCALE	
AS NOTED	
CITY OF HOUSTON PM	
N.K. NUPUR KRISHNAN P.E. P.E.	
SHEET NO. 114 OF 274	

N1E41

PLOTTED: 8/11/2026 1:47 PM

PLOT STYLE: COH.ctb

FILE PATH: \\wuspplal01\d$\Global ProjectWise Plotting - WUS\Queue 1\queue1.dwg

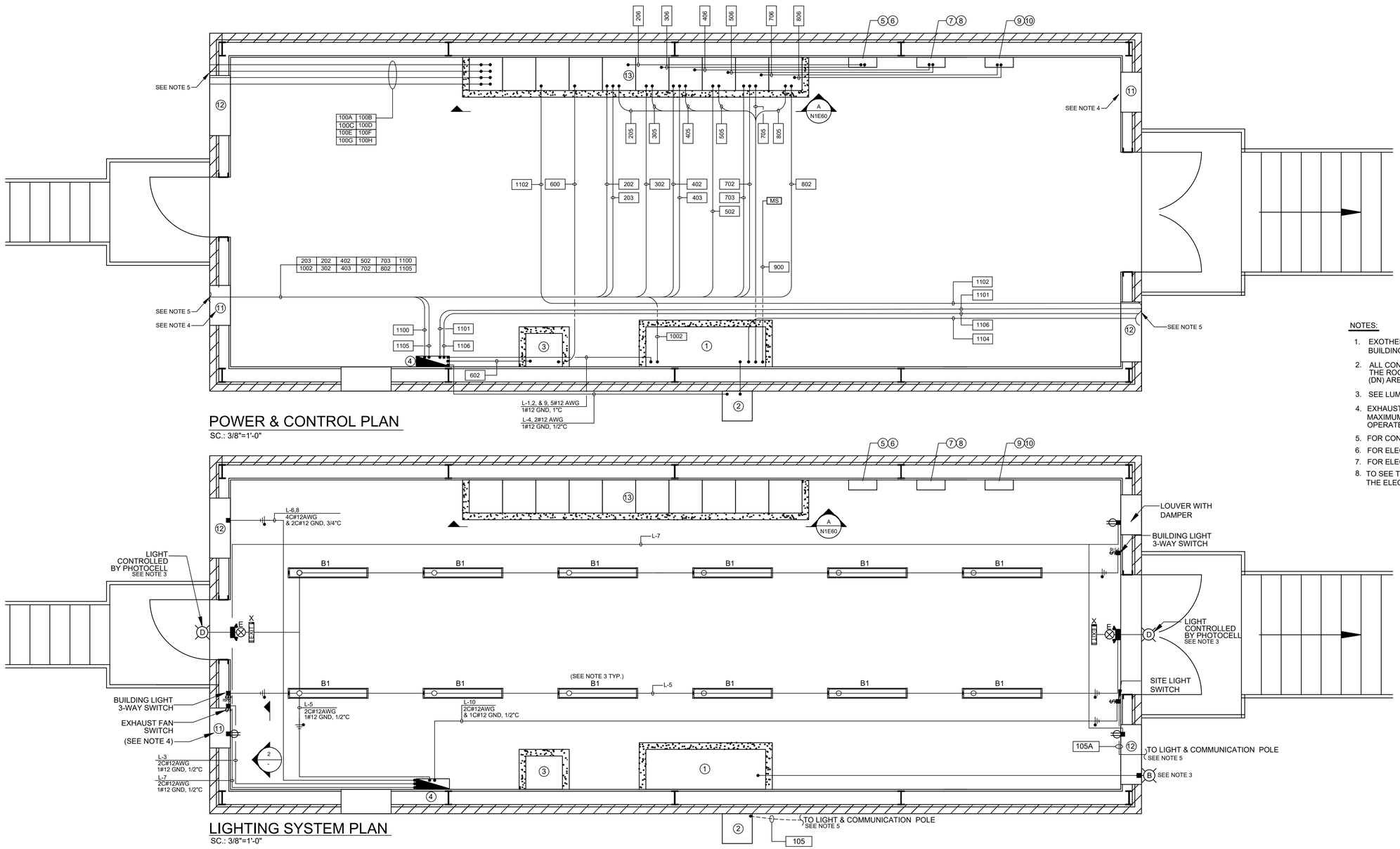

POWER & CONTROL PLAN

SC.: 3/8"=1'-0"

LIGHTING SYSTEM PLAN

SC.: 3/8"=1'-0"

LUMINAIRE SCHEDULE

FIXTURE TYPE	VOLTAGE	LAMP TYPE	TOTAL INPUT WATTS	TOTAL OUTPUT LUMENS	MOUNT	DESCRIPTION	MAKE/MODEL
B	120/277V UNIVERSALDRIVER	LED	13	---	STEM MOUNT	RED POLYCARBONATE LENS SUITABLE FOR WET LOCATIONS - 120V	EDWARD SIGNALING, SERIES 105 XBR, MODEL 05XBRMR120A, WITH OUTLET BOX ATTACHMENT CAT. No. 105BX
B1	120/277V UNIVERSAL DRIVER	LED	42	4000	SUSPENDED	LINEAR LED LUMINAIRE, UV-STABILIZED, INJECTION-MOLDED, IMPACT-RESISTANT, FROSTED POLYCARBONATE HOUSING, -29°C TO 40°C OPERATING TEMPERATURE, 4000K COLOR TEMPERATURE, 80CRI, UV-STABILIZED, INJECTION-MOLDED, IMPACT-RESISTANT CLEAR POLYCARBONATE LENS, UL 1598 WET LOCATION LISTED.	LITHONIA ARCHWAY VAP LED SERIES VAP-4000L-PCL-WD-MVOLT-40K-80CRI-VAPCMB DAY-BRITE CFI VAPORLUME LED V2, V2WPB70L840-4-UNV TBK OR WBK ACESSORY & FKR-126
D	120/277V UNIVERSAL DRIVER WITH EMERGENCY BATTERY PACK WITH PHOTO CELL	LED	12W	1500	WALL	POWDER COATED DIE-CAST ALUMINUM HOUSING, NATURAL ALUMINUM FINISH, -30°C TO 40°C OPERATING TEMPERATURE, 4000K COLOR TEMPERATURE, 70CRI, GASKETED LENS, IESNA TYPE III DISTRIBUTION, NEMA 4X RATED, WET LOCATION RATED, WITH EMERGENCY BATTERY PACK.	LITHONIA LIGHTING WST LED SERIES WST LED P1 40K VF MVOLT E20WC GARDCO LED WALL SCONCE 101L SERIES, 101L-16L-530-NW-G1-3-EBPC-UNV-MGY
E	120/277V UNIVERSAL DRIVER WITH EMERGENCY BATTERY PACK	LED	1.2	536	WALL 8-FT ABOVE FLOOR	LED STANDBY EMERGENCY LUMINAIRE, WHITE ENGINEERING GRADE THERMOPLASTIC HOUSING, 16°C TO 32°C OPERATING TEMPERATURE, IMPACT RESISTANT, CORROSION-PROOF, DAMP LOCATION RATED, EMERGENCY BATTERY PACK INCLUDED.	LITHONIA ELM6 LED SERIES
X	120/277V UNIVERSAL DRIVER WITH EMERGENCY BATTERY PACK	LED	18.2	N/A	UNIVERSAL	EMERGENCY EXIT SIGN, CAST-ALUMINUM, NEMA-4X, CLEAR UV-STABLE POLYCARBONATE COVER, SINGLE WHITE POLYCARBONATE, FACEPLATE WITH DIRECTIONAL CHEVRON KNOCKOUTS. WHITE HOUSING, UNIVERSAL MOUNT, SEALED MAINTENANCE-FREE NICKEL CADMIUM BATTERY WITH 90 MINUTE CAPACITY.	LITHONIA LIGHTING LV EL N LED, SERIES LV-S-W-2-R-120/277-EL

No.	DESCRIPTION
1	CONTROL CABINET
2	PPU-AC PANEL
3	LIGHTING TRANSFORMER
4	LIGHTING PANEL
5	PUMP NO. 1 PWR FACT. CORR. CAPACITOR
6	PUMP NO. 2 PWR FACT. CORR. CAPACITOR
7	PUMP NO. 3 PWR FACT. CORR. CAPACITOR
8	PUMP NO. 4 PWR FACT. CORR. CAPACITOR
9	PUMP NO. 5 PWR FACT. CORR. CAPACITOR
10	PUMP NO. 6 PWR FACT. CORR. CAPACITOR
11	EXHAUST FAN WITH MANUAL DAMPER
12	WALL MOUNT A/C UNIT
13	MOTOR CONTROL CENTER MCC-1

NOTES:

1. EXOTHERMIC WELD BUILDING GROUND CONDUCTOR TO BUILDING REINFORCING STEEL.
2. ALL CONDUITS DESIGNATED AS UP ARE CONTINUED ON THE ROOF PLAN. ALL CONDUITS DESIGNATED AS DOWN (DN) ARE CONTINUED ON THE FLOOR PLAN.
3. SEE LUMINAIRE SCHEDULE FOR FIXTURE TYPE.
4. EXHAUST FAN TO BE WALL MOUNT AND SIZED 2HP 120 VOLT MAXIMUM PROVIDE WITH TEMPERATURE SENSOR SET TO OPERATE AT 10" DEGREES ABOVE A/C RANGE COOLING.
5. FOR CONTINUATION SEE DRAWING NO. N1E40.
6. FOR ELECTRICAL CONDUIT SCHEDULE , SEE DRAWING NO. N1E61.
7. FOR ELECTRICAL BUILDING DIMENSIONS, SEE DRAWING NO. N1S11 & N1S11A.
8. TO SEE THE GROUNDING CONNECTION OF THE CONTROL BUILDING AND THE ELECTRICAL & CONTROL EQUIPMENT, REFER TO DRAWING NO. N1E42A.

NO.	DATE	REVISION	APP.

HATCH
750 TOWN & COUNTRY BLVD
SUITE 650
HOUSTON, TX 77024
P: 832-930-7670
TX FIRM NUMBER: F-314

SURVEYED BY:
AMANI ENGINEERING, INC.
FB NO. P-6357

STATE OF TEXAS
GUY N SEVERN
105809
LICENSED
PROFESSIONAL ENGINEER
7/21/2026

CITY OF HOUSTON

HOUSTON PUBLIC WORKS

LIFT STATION RENEWAL & REPLACEMENT PROJECT

BISSONNET #4 LS

CONTROL BUILDING-I

WBS NUMBER	R-000267-0173-4
DRAWING SCALE	AS NOTED
CITY OF HOUSTON PM	NUPUR KRISHNAN P.E. N.K.
SHEET NO.	115 OF 274

FOR CITY OF HOUSTON USE ONLY

HOUSTON PUBLIC WORKS
ACCEPTED AND FILED
82825
CITY DRAWING NUMBER
Approval Date 08/14/26
HOUSTON TX

N1E42

PLOTTED: 8/11/2026 10:15 AM
PLOT STYLE: COH.ctb
FILE PATH: \\wuspplot01\d$\Global ProjectWise Plotting - WUS\Queue 2\queue2.dwg

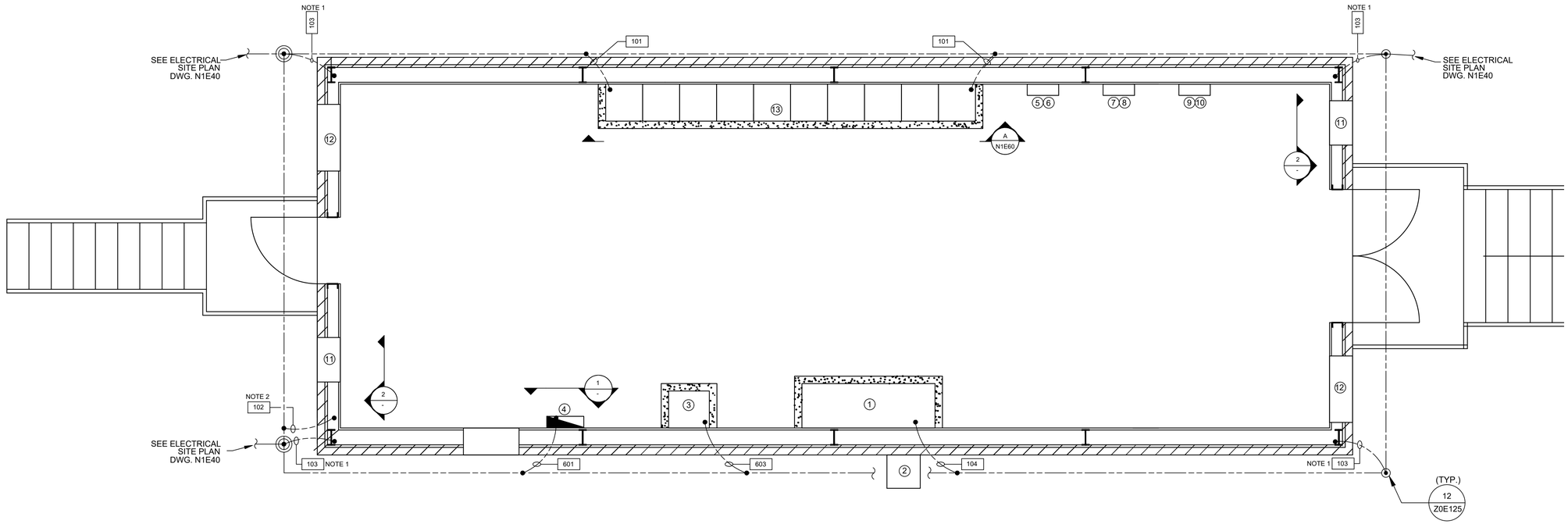

GROUNDING PLAN

SC.: 3/8"=1'-0"

NOTES:

1. BOND REBAR IN CONCRETE FOOTER TO GROUND ROD IN FOUR LOCATIONS.
2. EXOTHERMIC WELD BUILDING GROUND CONDUCTOR TO BUILDING REINFORCING STEEL.

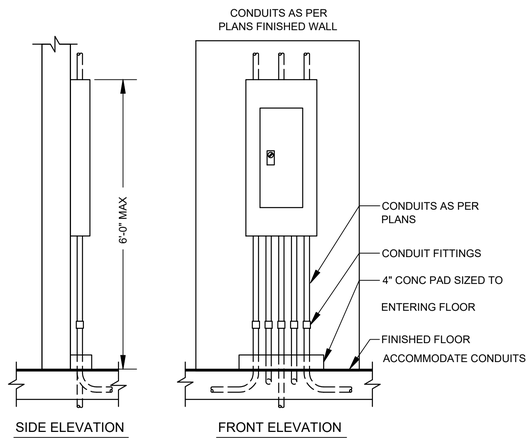

TYPICAL PANEL INSTALLATION

DETAIL 1 (SC.: 3/8"=1'-0")

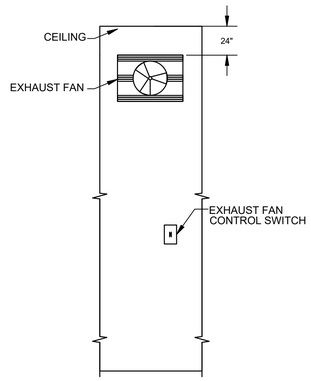

EXHAUST FAN

DETAIL 2 (SC.: 3/8"=1'-0")

No.	DESCRIPTION
1	CONTROL CABINET
2	PPU-AC PANEL
3	LIGHTING TRANSFORMER
4	LIGHTING PANEL
5	PUMP NO. 1 PWR FACT. CORR. CAPACITOR
6	PUMP NO. 2 PWR FACT. CORR. CAPACITOR
7	PUMP NO. 3 PWR FACT. CORR. CAPACITOR
8	PUMP NO. 4 PWR FACT. CORR. CAPACITOR
9	PUMP NO. 5 PWR FACT. CORR. CAPACITOR
10	PUMP NO. 6 PWR FACT. CORR. CAPACITOR
11	EXHAUST FAN WITH MANUAL DAMPER
12	WALL MOUNT A/C UNIT
13	MOTOR CONTROL CENTER MCC-1
14	ELECTRICAL & CONTROL PANEL (BIOSCRUBER)

NO.	DATE	REVISION	APP.

HATCH
750 TOWN & COUNTRY BLVD
SUITE 650
HOUSTON, TX 77024
P: 832-930-7670
TX FIRM NUMBER: F-314

SURVEYED BY:
AMANI ENGINEERING, INC.
FB NO. P-6357

STATE OF TEXAS
GUY N SEVERN
105809
LICENSED
PROFESSIONAL ENGINEER
7/21/2026

CITY OF HOUSTON

HOUSTON PUBLIC WORKS

LIFT STATION RENEWAL & REPLACEMENT PROJECT

BISSONNET #4 LS

CONTROL BUILDING-II

WBS NUMBER
R-000267-0173-4
DRAWING SCALE
AS NOTED
CITY OF HOUSTON PM
NUPUR KRISHNAN P.E. N.K.

FOR CITY OF HOUSTON USE ONLY

HOUSTON PUBLIC WORKS
ACCEPTED AND FILED
82825
CITY DRAWING NUMBER
Approval Date 08/14/26
HOUSTON TX

N1E42A

SHEET NO. 115A OF 274

PLOTTED: 8/11/2026 10:27 AM

PLOT STYLE: COH.ctb

FILE PATH: \\wusppplot01\d$\Global ProjectWise Plotting - WUS\Queue 5\queue5.dwg

EQUIPMENT AND DEVICE SCHEDULE

ITEM	QTY.	DESCRIPTION
A	1	SINGLE CHANNEL INTRINSICALLY SAFE RELAY, ATC MODEL ISO-120-AFA
B	2	ANALOG I/O SURGE SUPPRESSOR EATON MODEL IOP32D
C	6	PUMP PROTECTION MODULE RATED FOR CLASS I, DIVISION I, MINICAS II 83 58 57 24VDC/AC
D	3	CONTROL RELAY, 3 POLE, 120VAC CONTROL COIL - TURCK C3-A30X/120AC W/S3-S BASE
E	6	HAND-OFF-AUTO SWITCH, 3 POSITION, HEAVY-DUTY, OILTIGHT WITH 2 SETS OF CONTACT BLOCKS (PUMP CONTROL), ALLEN-BRADLEY MODEL 800H-JR2B
F	6	INDICATING LIGHT, HEAVY DUTY, OILTIGHT, RED, 24 VDC, LED, WITH "RUN" LEGEND, ALLEN-BRADLEY MODEL 800H-QRTH2R
G	7	TERMINAL RAIL, STEEL GALVANIC ZINC, W: 2000 mm, H: 15 mm, D: 5.5 mm, WEIDMULLER ITEM No.0117510000
H	1	SWITCH FOR CABINET LIGHT, 120V, 20A, SPST, HUBBELL MODEL HBL1221I WITH METALLIC BOX 4"X4" AND STEEL METALLIC SQUARE BOX COVER DUPLEX
I	2	DUPLEX RECEPTACLE, 120V, 20A, 2 WIRE, GROUNDED, HUBBELL MODEL HBL53621 WITH METALLIC BOX 4"X4" AND STEEL METALLIC SQUARE BOX COVER DUPLEX
J	1	24" LED STRIP LIGHT 120V SUITABLE FOR ZERO DEGREE OPERATION, HOFFMAN MODEL LF120V28
K	73	NAMEPLATES, SEE SPECIFICATIONS (SEE NAMEPLATE SCHEDULE)
L	2	PROGRAMMABLE LOGIC CONTROLLER WITH EXPANSION UNIT, SIEMENS MODEL 6ES7214-1HG40-0XB0
M	39	CONTROL RELAY, 3 POLE, 24VDC CONTROL COIL - TURCK C3-A30X/24DC W/S3-S BASE
N	55	TAG CARRIER, SCHT 5 WEIDMULLER, CATALOG NO. 0292460000
O	16	END BRACKET, WEW 35/2 WEIDMULLER, CATALOG NO. 1061200000
P	1	NEMA 12 GASKETED STEEL ENCLOSURES WITHOUT VENTS 72" H x 72" W x 24" D.
Q	195	TERMINAL BLOCKS, WEIDMULLER WDU 2.5, CATALOG NO. 1020000000
R	10	WIRE DUCT 2" WIDE X 3" DEEP MINIMUM, LENGTH 6', HELLERMANN TYTON MODEL SL2X3W4
S	1	GROUND BUS
T	1	COMMUNICATION ETHERNET SWITCH, SIEMENS MODEL SCALANCE X310FE
U	1	ANALOG INPUT MODULE, 8 ANALOG INPUT, SIEMENS MODEL SIMATIC S7-1200, 6ES7231-4HF32-0XB0
V	1	PUMP ALARM RESET PUSHBUTTON, ROCKWELL MODEL 800H-AR2BF
W	3	ANALOG INPUT MODULE, 4 ANALOG INPUT, SIEMENS MODEL SIMATIC S7-1200, 6ES7231-4HD32-0XB0
X	192	FUSED TERMINAL BLOCKS, WEIDMULLER WSI 6, CATALOG NO. 1011000000
Y	1	480VAC, 3 PHASES SURGE PROTECTOR - SURGE SUPPRESSION INC MODEL SDLA3N4
Z	1	PROGRAMMING SCREEN (OIT) - SIEMENS INDUSTRY TP900 - CONFORT TOUCH PANEL
AA	1	DIGITAL INPUT/OUTPUT MODULE, 8 DI/8 DO 24 VDC , SIEMENS MODEL SIMATIC S7-1200, 6ES7223-1BH32-0XB0
BB	1	120VAC - 24VDC PLC POWER SUPPLY 5A, PHOENIX CONTACT MODEL QUINT-PS/1AC/24DC/5
CC	2	DIGITAL INPUT MODULE, 16 DIGITAL INPUT 24 VDC, SIEMENS MODEL SIMATIC S7-1200, 6ES7231-4BH32-0XB0
DD	2	INDICATING LED LIGHT, HEAVY DUTY, OILTIGHT, GREEN, 24 VDC, LED WITH " PRIMARY PLC" & "BACKUP, PLC" LEGEND, ALLEN-BRADLEY AB 800H-QRTH2G
EE	2	ANALOG SIGNAL ISOLATOR, TURCK MODEL IMS-AI-DLI-22-DLI/L

* - AS SCHEDULED

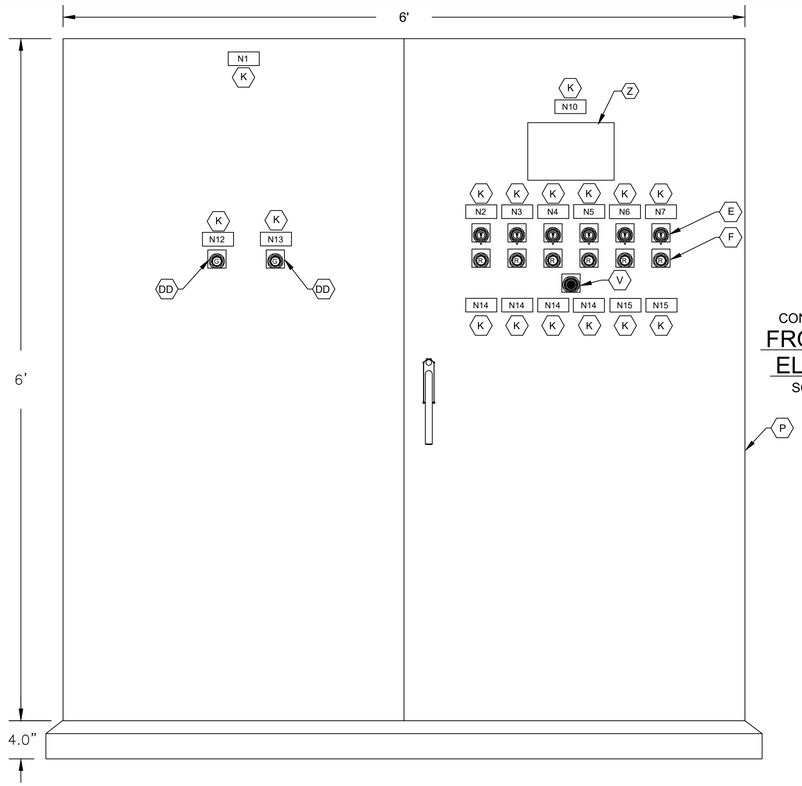

CONTROL CABINET
FRONT DOOR
ELEVATION
SC.: 1-1/2"=1'-0"

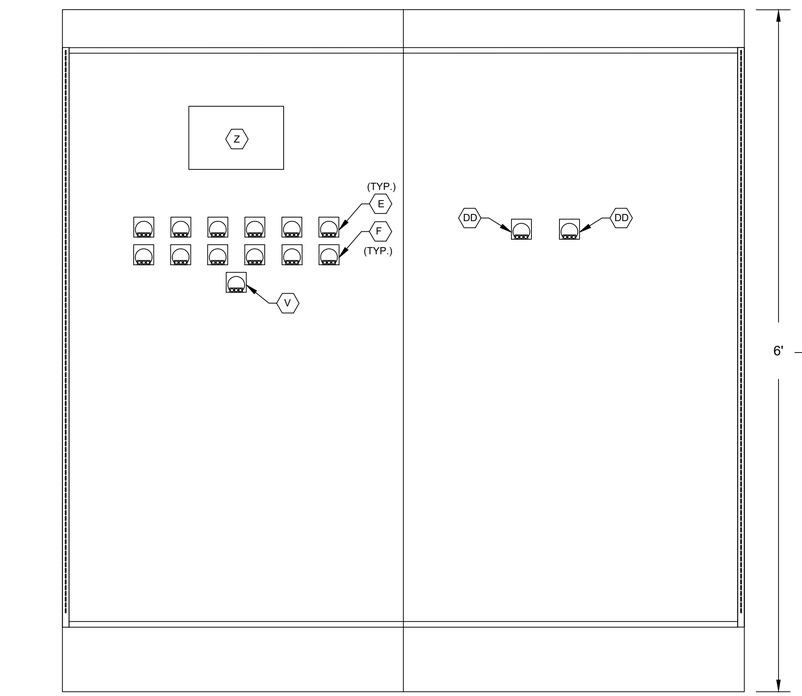

CONTROL CABINET
INNER DOOR
ELEVATION
SC.: 1-1/2"=1'-0"

NAMEPLATE SCHEDULE

DESIGNATION	ENGRAVED
N1	BISSONNET #4 LS PUMP STATION
N2	PUMP NO. 1
N3	PUMP NO. 2
N4	PUMP NO. 3
N5	PUMP NO. 4
N6	PUMP NO. 5
N7	PUMP NO. 6
N8	-
N9	-
N10	PROGRAMMING SCREEN
N11	-
N12	PRIMARY PLC
N13	BACKUP PLC
N14	MOTOR DATA HORSEPOWER (OUTPUT) ---------- 215 RPM AT FULL LOAD ---------- 595 MAX START PER HOUR ---------- 15 FREQUENCY ---------- 60 hZ NUMBER OF PHASES ---------- 3 MODEL NUMBER ---------- RATED VOLTAGE ---------- 480V SERVICE FACTOR ---------- 0.62 FULL LOAD AMPS ---------- 345A INSULATION CLAS ---------- H NEMA DESIGN LETTER ---------- TEMPERATURE RISE ---------- NEMA FRAME SIZE ---------- DATE OF MANUFACTURE ---------- THERMO PROTECTION ---------- MOISTURE PROTECTION ----------
N15	MOTOR DATA HORSEPOWER (OUTPUT) ---------- 90 RPM AT FULL LOAD ---------- 500 MAX START PER HOUR ---------- 10 FREQUENCY ---------- 60 hZ NUMBER OF PHASES ---------- 3 MODEL NUMBER ---------- RATED VOLTAGE ---------- 480V SERVICE FACTOR ---------- 0.58 FULL LOAD AMPS ---------- 153A INSULATION CLAS ---------- H NEMA DESIGN LETTER ---------- TEMPERATURE RISE ---------- NEMA FRAME SIZE ---------- DATE OF MANUFACTURE ---------- THERMO PROTECTION (IF REQUIRED) -- MOISTURE PROTECTION (IF REQUIRED)-

TEMPERATURE RISE ----------
NEMA FRAME SIZE ----------
DATE OF MANUFACTURE ----------
THERMO PROTECTION (IF REQUIRED) --
MOISTURE PROTECTION (IF REQUIRED)-

NO.	DATE	REVISION	APP.

HATCH
750 TOWN & COUNTRY BLVD
SUITE 650
HOUSTON, TX 77024
P: 832-930-7670
TX FIRM NUMBER: F-314

SURVEYED BY:
AMANI ENGINEERING, INC.
FB NO. P-6357

STATE OF TEXAS
GUY N SEVERN
105809
LICENSED
PROFESSIONAL ENGINEER
7/21/2026

CITY OF HOUSTON
HOUSTON PUBLIC WORKS

LIFT STATION RENEWAL & REPLACEMENT PROJECT
BISSONNET #4 LS

CONTROL CABINET EQUIPMENT LAYOUT AND SCHEDULE

WBS NUMBER	FOR CITY OF HOUSTON USE ONLY
R-000267-0173-4	HOUSTON PUBLIC WORKS ACCEPTED AND FILED 82825 CITY DRAWING NUMBER Approval Date 08/14/26 HOUSTON TX
DRAWING SCALE	
AS NOTED	
CITY OF HOUSTON PM	
NUPUR KRISHNAN P.E. N.K.	
SHEET NO. 116 OF 274	

N1E43

PLOTTED: 8/11/2026 10:14 AM
PLOT STYLE: COH.ctb
FILE PATH: \\wusppplot01\d$\Global ProjectWise Plotting - WUS\Queue 5\queue5.dwg

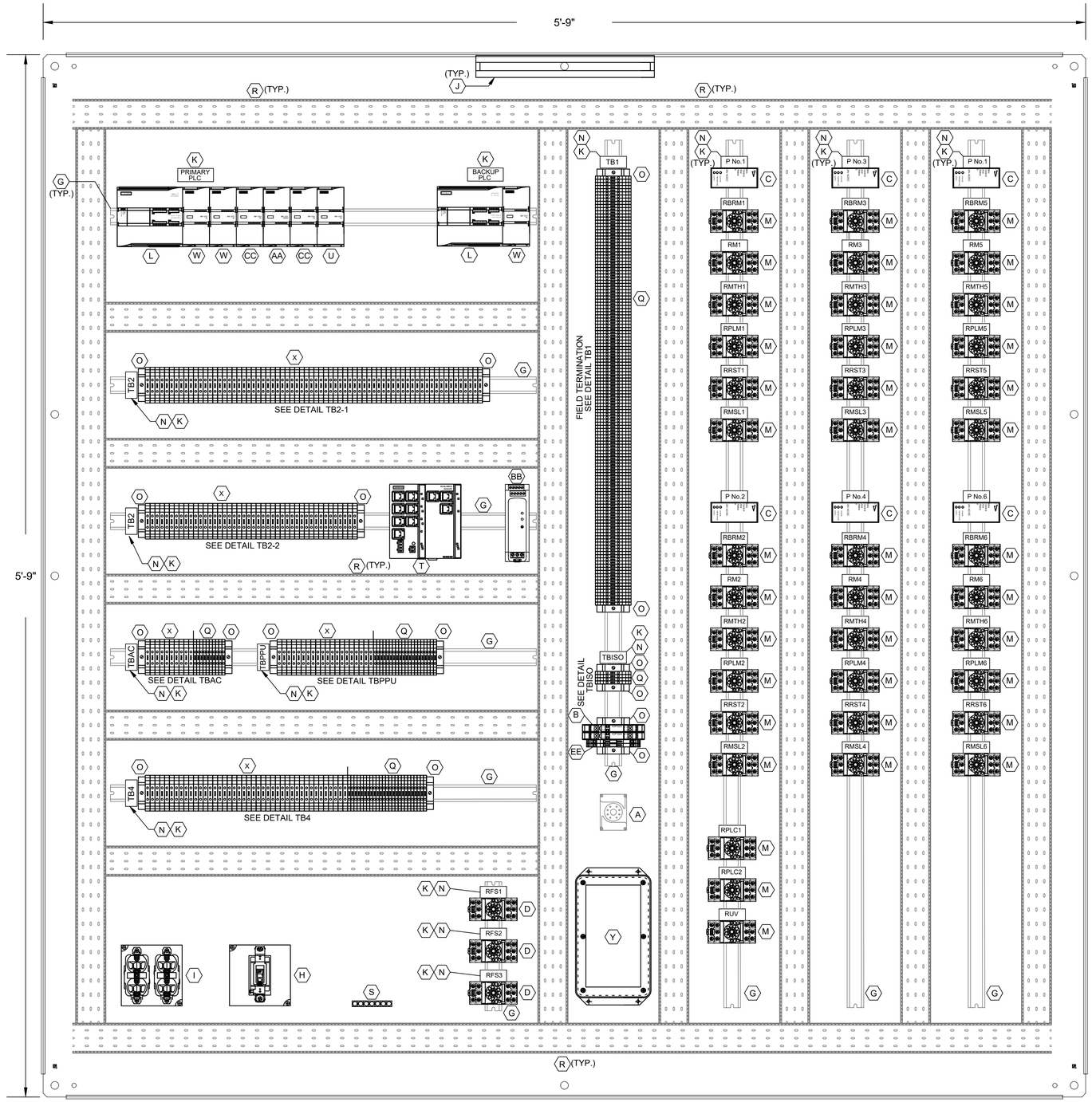

CONTROL PANEL
INTERNAL ARRANGEMENT
SC.: 3"=1'-0"

L1A
L1N
SPARE
3
3N
SPARE
49
50
51
52
53
54
1004
1
24V-
24V-
SPARE
1002
2
11
1001
1001A
12
1003
1003A
34
3N
SPARE
SPARE
102
103
3P1
109
110
112
116
117
120
121
122
123
124
125
126
127
SPARE
SPARE
202
203
3P2
209
210
212
216
217
220
221
222
223
224
225
226
227
SPARE
SPARE
302
303
3P3
309
310
312
316
317
320
321
322
323

DETAIL TB1

324
325
326
327
SPARE
SPARE
402
403
3P4
409
410
412
416
417
420
421
422
423
424
425
426
427
SPARE
SPARE
503
3P5
509
510
512
516
517
520
521
522
523
524
525
526
527
SPARE
SPARE
602
603
3P6
609
610
612
616
617
620
621
622
623
624
625
626
627

DETAIL TB1 (CONT.)

36A
37A
50
52
54
52A
52A
54A
L+
M
35B
38B
41B
44B
SPARE
SPARE
47B
50B
53B
13B
13AB
B
L+
M
14B
14AB
14GB
119
SPARE
L+
M
13
13A
13G
14
14A
14G
1M
2M
1L
3
30
32
34
37
38
41
33B
45
18B
SPARE
100
112
113
114
115
117
118
119
120
121
SPARE
200
212
213
214
215
217
218
219
220
221
SPARE

DETAIL TB2-1

300
312
SPARE
313
314
315
317
318
319
320
321
SPARE
400
412
413
414
415
417
418
419
420
421
SPARE
500
512
513
514
515
517
518
519
520
521
SPARE
600
612
613
614
615
617
618
619
620
621
SPARE

DETAIL TB2-2

1
2
3
4
5
6
7
8
9
10
11
12
13
14
15
16
17
18
19
20
21
22
23
24
25
26
27
28
29
30
31
32
33
34
35
36
37
38
39
40
41
42
N1
N2
N3
N4
N5
N6
N7
N8
N9
N10
N11
N12
N13
N14
N15
N16
N17
N18
N19
N20
N21
N22
N23
N24
N25

DETAIL TB4

L1
L2
L3
L4
L5
L6
L7
L8
L9
L10
L11
L12
L13
L14
L15
L16
L17
L18
L19
L20
N1
N2
N3
N4
N5
N6
N7
N8
N9
N10
N11
N12
N13
N14
N15
N16
N17
N18
N19
N20

DETAIL TBPPU

L1
L2
L3
L4
L5
L6
L7
L8
L9
L10
N1
N2
N3
N4
N5
N6
N7
N8
N9
N10

DETAIL TBAC

1500
1501
1503
1504

DETAIL TBISO

LEGEND

TAG	DESCRIPTION
RMTH	MOTOR HIGH TEMPERATURE ALARM RELAY
RPLM	PLC PUMP RUN RELAY
RRST	PUMP RESET AUX RELAY
RPLC	PLC MODE AUX RELAY
RMOR	MOTOR OVERLOAD ALARM RELAY
RBRM	BACKUP SYSTEM RUN RELAY
RUV	UNDER VOLTAGE RELAY
ISO	INTRINSICALLY SAFE RELAY
RFS	PUMP RUN FLOAT SWITCH RELAY
TDFRM	TIMER FLOAT SWITCH RUN RELAY
RMSL	MOTOR SEAL LEAK ALARM RELAY
RM	PUMP RUN AUX RELAY

NOTES:

1. SEE SHEET N1E43 FOR EQUIPMENT SCHEDULE.

NO.	DATE	REVISION	APP.

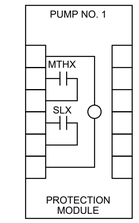

PUMP PROTECTION MODULE DETAIL, ITEM C

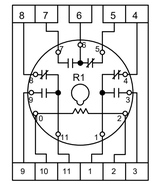

RELAY DETAIL ITEM D

HATCH
750 TOWN & COUNTRY BLVD
SUITE 650
HOUSTON, TX 77024
P: 832-930-7670
TX FIRM NUMBER: F-314

SURVEYED BY:
AMANI ENGINEERING, INC.
FB NO. P-6357

STATE OF TEXAS
GUY N SEVERN
105809
LICENSED
PROFESSIONAL ENGINEER
7/21/2026

CITY OF HOUSTON
HOUSTON PUBLIC WORKS

LIFT STATION RENEWAL & REPLACEMENT PROJECT
BISSONNET #4 LS

CONTROL CABINET EQUIPMENT LAYOUT

WBS NUMBER
R-000267-0173-4
DRAWING SCALE
AS NOTED
CITY OF HOUSTON PM
NUPUR KRISHNAN P.E. N.K.

FOR CITY OF HOUSTON USE ONLY

HOUSTON PUBLIC WORKS
ACCEPTED AND FILED
82825
CITY DRAWING NUMBER
Approval Date 08/14/26
HOUSTON TX

N1E44 | SHEET NO. 117 OF 274

PLOTTED: 8/11/2026 10:21 AM
PLOT STYLE: COH.ctb
FILE PATH: \\wusppplot01\d$\Global ProjectWise Plotting - WUS\Queue 5\queue5.dwg

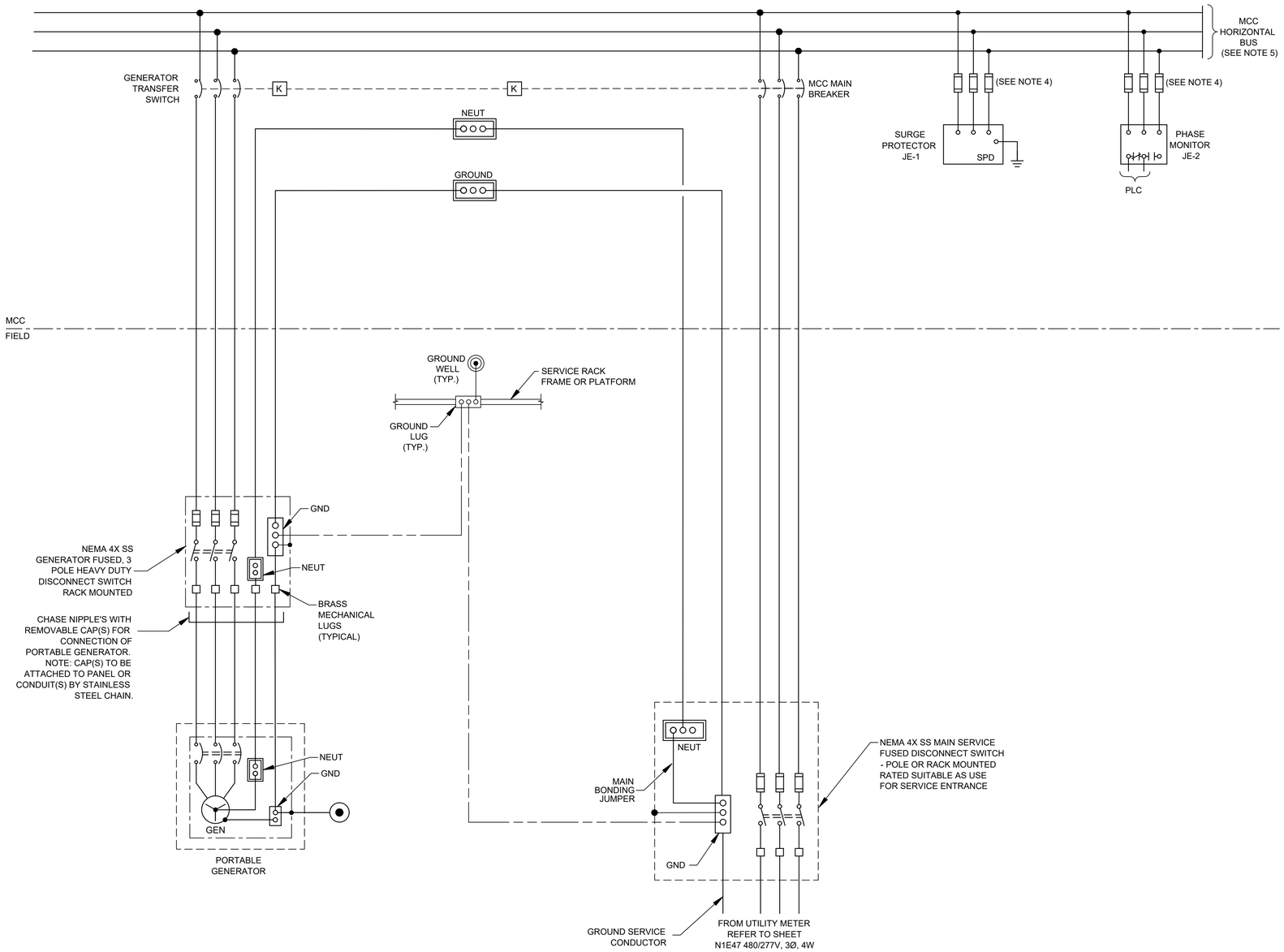

NO.	DATE	REVISION	APP.

NOTES:

1. UNLESS OTHERWISE INDICATED, ALL DEVICES WITHOUT FURTHER DESIGNATION ARE LOCATED AT THE MOTOR CONTROL CENTER (MCC).
2. REFER TO SPEC SECTION 16120 FOR CONDUCTOR COLOR CODE.
3. FOR ELECTRICAL DIAGRAM, SEE DRAWING N1E47.
4. PROVIDE FUSE SIZE ACCORDING TO MANUFACTURER'S REQUIREMENTS.
5. FOR MCC SCHEMATIC AND WIRING DIAGRAM, SEE DRAWING N1E46.

HATCH
750 TOWN & COUNTRY BLVD
SUITE 650
HOUSTON, TX 77024
P: 832-930-7670
TX FIRM NUMBER: F-314

SURVEYED BY:
AMANI ENGINEERING, INC.
FB NO. P-6357

STATE OF TEXAS
GUY N SEVERN
105809
LICENSED
PROFESSIONAL ENGINEER
7/21/2026

CITY OF HOUSTON
HOUSTON PUBLIC WORKS

LIFT STATION RENEWAL & REPLACEMENT PROJECT
BISSONNET #4 LS

INCOMING POWER THREE LINE DIAGRAM

WBS NUMBER
R-000267-0173-4
DRAWING SCALE
AS NOTED
CITY OF HOUSTON PM
NUPUR KRISHNAN P.E. N.K.
SHEET NO. 118 OF 274

FOR CITY OF HOUSTON USE ONLY

HOUSTON PUBLIC WORKS
ACCEPTED AND FILED
82825
CITY DRAWING NUMBER
Approval Date 08/14/26
HOUSTON TX

N1E45

PLOTTED: 8/11/2026 10:23 AM
PLOT STYLE: COH.ctb
FILE PATH: \\wusppplot01\d$\Global ProjectWise Plotting - WUS\Queue 4\queue4.dwg

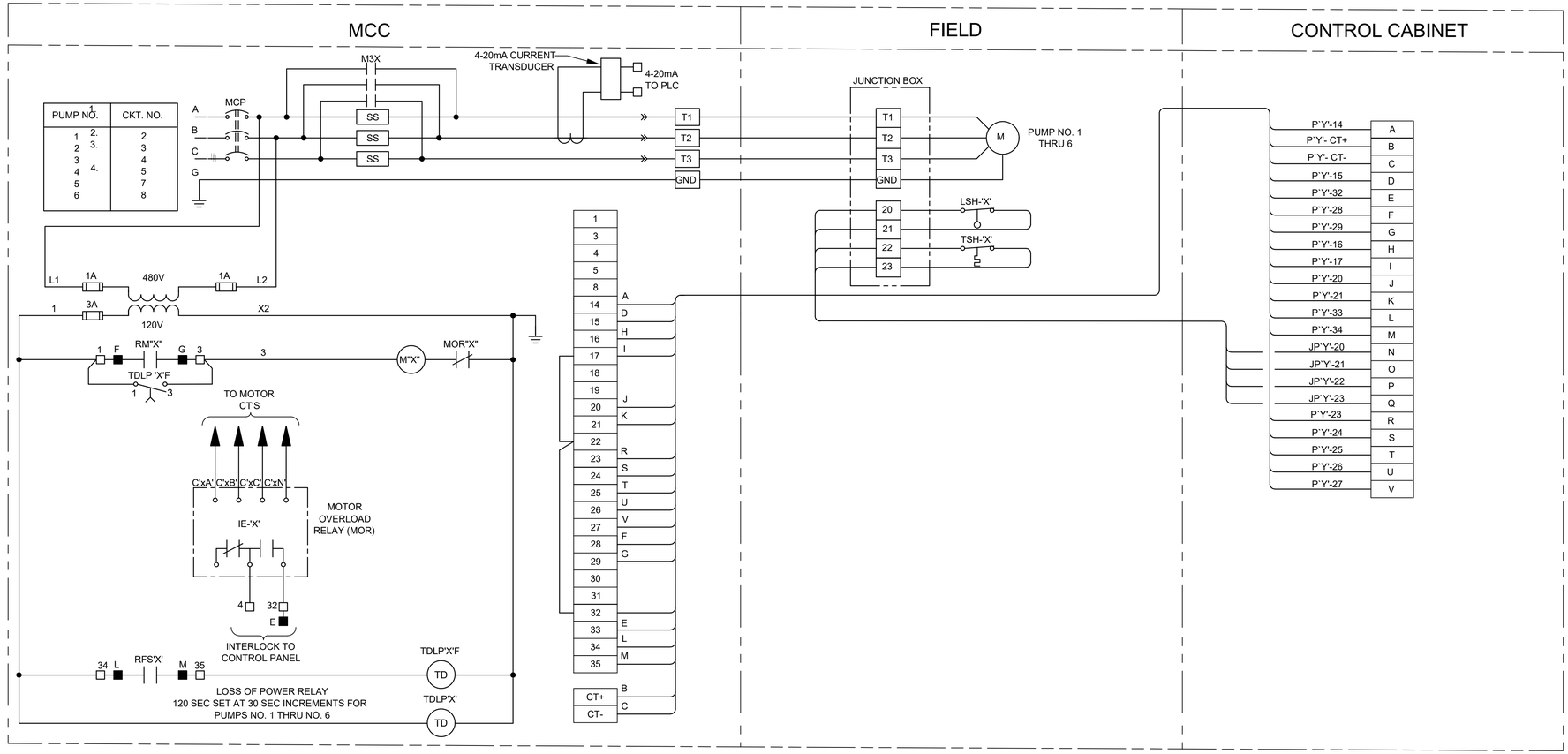

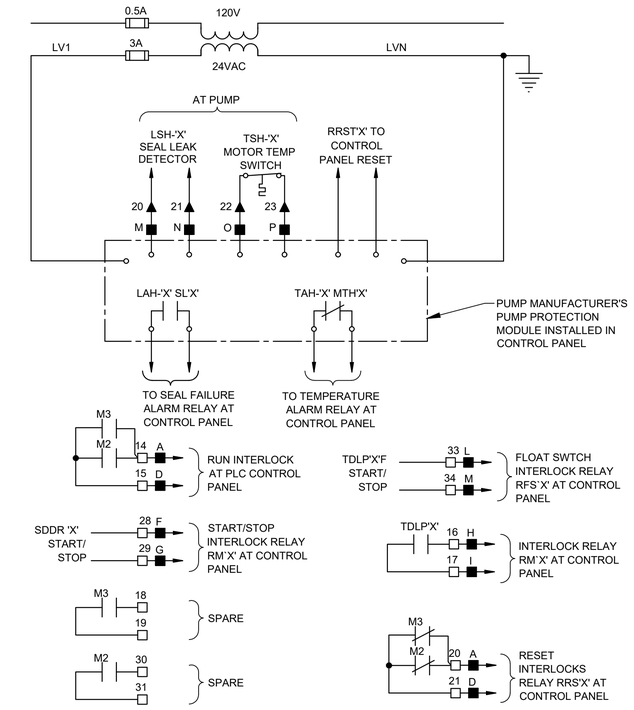

INDOOR MCC PUMP SCHEMATIC & WIRING DIAGRAM

SCHEMATIC 1 -

WIRE TAG OR TERMINAL LABEL	PUMP NO. 1	PUMP NO. 2	PUMP NO. 3	PUMP NO. 4	PUMP NO. 5	PUMP NO. 6	FUNCTION
A	3P1	3P2	3P3	3P4	3P5	3P6	24VDC CONTROL
B	124	224	324	424	524	624	4-20mA CURRENT TRANSDUCER
C	125	225	325	425	525	625	4-20mA CURRENT TRANSDUCER
D	116	216	316	416	516	616	M CONTACT
E	117	217	317	417	517	617	OVERLOAD ALARM
F	114	214	314	414	514	614	RUN INTERLOCK
G	115	215	315	415	515	615	RUN INTERLOCK
H	102	202	302	402	502	602	LOSS OF POWER TIMER
I	103	203	303	403	503	603	LOSS OF POWER TIMER
J	118	218	318	418	518	618	ALARM RESET INTERLOCK
K	119	219	319	419	519	619	ALARM RESET INTERLOCK
L	126	226	326	426	526	626	FLOAT SWITCH RUN INTERLOCK
M	127	227	327	427	527	627	FLOAT SWITCH RUN INTERLOCK
N	120	220	320	420	520	620	**SEAL LEAK DETECTOR**
O	121	221	321	421	521	621	SEAL LEAK DETECTOR
P	122	222	322	422	522	622	**MOTOR TEMPERATURE SWITCH**
Q	123	223	323	423	523	623	MOTOR TEMPERATURE SWITCH
R	109	209	309	409	509	609	SDDR MODE

NOTES:

1. THE 'X' NOTATION IN SCHEMATIC DESIGNATIONS REPRESENTS APPLICABLE PUMP NO. 1, 2, 3, 4, 5, OR 6.
2. THE 'Y' NOTATION INDICATES MCC CIRCUIT NUMBER.
3. UNLESS OTHERWISE INDICATED, ALL DEVICES WITHOUT FURTHER DESIGNATION ARE LOCATED AT THE MOTOR CONTROL CENTER (MCC).
4. MOTOR OVERLOAD RELAY OUTPUT CONTACT SHOWN IS NORMALLY CLOSED WHEN RELAY IS DE-ENERGIZED. OPEN WHEN ENERGIZED, AND CLOSED WHEN IN ALARM. (VERIFY OPERATION OF RELAY PROVIDED AND ADJUST CONNECTION OF RMOR AUXILIARY RELAYS.)

LEGEND

- △ DEVICE OR FIELD TERMINAL LOCATED AT MOTOR
- * DEVICE OR FIELD TERMINAL LOCATED REMOTE
- □ DEVICE OR FIELD TERMINAL LOCATED AT POWER PANEL
- ■ FIELD TERMINAL LOCATED AT CONTROL PANEL
- ▲ REMOTE TERMINAL
- ● DEVICE TERMINAL NO.
- ◆ PLC INTERFACE TERMINAL

NO.	DATE	REVISION	APP.

HATCH
750 TOWN & COUNTRY BLVD
SUITE 650
HOUSTON, TX 77024
P: 832-930-7670
TX FIRM NUMBER: F-314

SURVEYED BY:
AMANI ENGINEERING, INC.
FB NO. P-6357

STATE OF TEXAS
GUY N SEVERN
105809
LICENSED PROFESSIONAL ENGINEER
7/21/2026

CITY OF HOUSTON
HOUSTON PUBLIC WORKS

LIFT STATION RENEWAL & REPLACEMENT PROJECT
BISSONNET #4 LS

MCC SCHEMATIC AND WIRING DIAGRAM

WBS NUMBER	R-000267-0173-4
DRAWING SCALE	AS NOTED
CITY OF HOUSTON PM	
NUPUR KRISHNAN P.E. N.K.	
SHEET NO.	119 OF 274

FOR CITY OF HOUSTON USE ONLY

HOUSTON PUBLIC WORKS
ACCEPTED AND FILED
82825
CITY DRAWING NUMBER
Approval Date 08/14/26
HOUSTON TX

N1E46

PLOTTED: 8/11/2026 10:15 AM
PLOT STYLE: COH.ctb
FILE PATH: \\wusppplot01\d$\Global ProjectWise Plotting - WUS\Queue 1\queue1.dwg

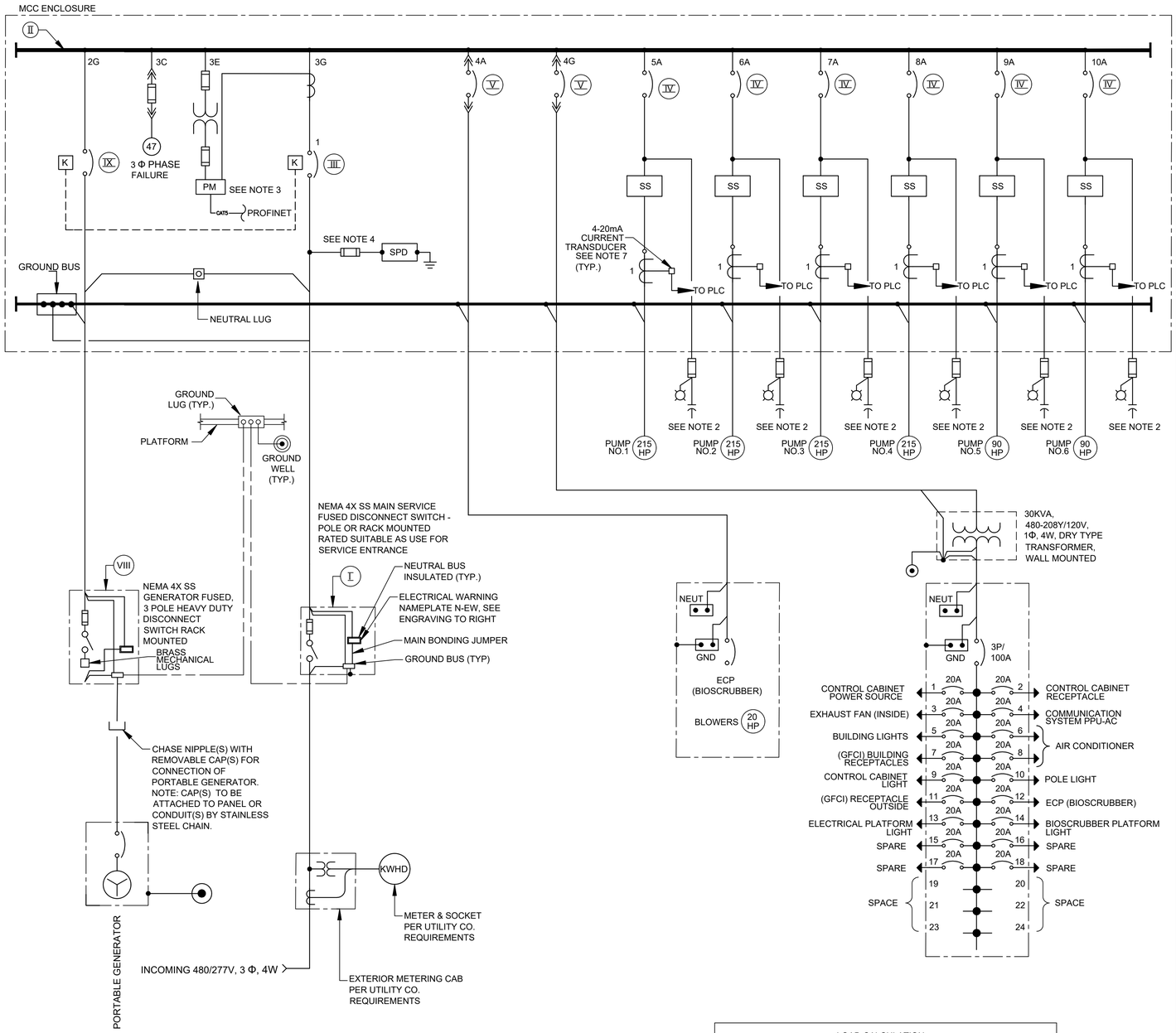

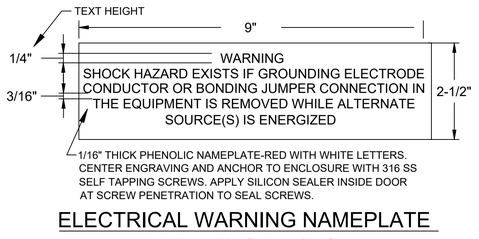

ELECTRICAL WARNING NAMEPLATE NEW ENGRAVING

RATINGS FOR PUMP SIZES INDICATED				
ITEM	CIRCUIT	DESCRIPTION	4 @ 215HP	2 @ 90HP
I	--	MAIN DISCONNECT SWITCH		
		OPERATING VOLTAGE	600V	
		CURRENT RATING	1600A	
		CURRENT LIMITING	CLASS L	
		FUSES TYPE & SIZE	1400A	
II	--	MOTOR CONTROL CENTER MAIN BUS - 3/C COPPER		
		OPERATING VOLTAGE	480V	
		CURRENT RATING	1600A	
		NEUTRAL SIZE & TYPE	800A LUG	
		BUS BRACING	65KA SYM	
III	3G (SEE NOTE 6)	MAIN BREAKER		
		3 POLE - TYPE	MOLDED CASE	
		MOUNTING	FIXED	
		OPERATING VOLTAGE	480V	
		FRAME SIZE	1600A	
		TRIP SETTING	1600A (100% RATED)	
		INTERRUPT CAPACITY	65KA SYM	
		OPTIONS	GND FAULT	
IV	5A 6A 7A 8A 9A 10A	PUMP MOTOR STARTERS		
		QUANTITY	6	
		MOUNTING	DRAWOUT	
		SHORT CIRCUIT PROTECTION		
		3 POLE - TYPE	MCP	MCP
		OPERATING VOLTAGE	480V	480V
		FRAME SIZE	600A	600A
		TRIP SETTING	FIELD ADJ	FIELD ADJ
		INTERRUPT CAPACITY	65KA SYM	65KA SYM
		MOTOR STARTING CONTACTOR		
		3 POLE - TYPE	VACUUM	VACUUM
		OPERATING VOLTAGE	480V	480V
		SIZE	NEMA 5	NEMA 4
		OVERLOAD PROTECTION TYPE	SOLID STATE MOR	SOLID STATE MOR
		CT RATIO	150:5	150:5
V	4A 4G	LIGHTING TRANSF. & BIOSCRUBBER FEEDER BREAKER		
		NO. OF POLES	2	
		TYPE	MOLDED CASE	
		OPERATING VOLTAGE	480V	
		FRAME SIZE	150A	
		TRIP SETTING	50A	
		INTERRUPT CAPACITY	65KA SYM	
VIII	--	GENERATOR FUSED DISCONNECT SWITCH		
		OPERATING VOLTAGE	600V	
		CURRENT RATING	1600A	
		CURRENT LIMITING	CLASS L	
		FUSES TYPE & SIZE	1400A	
IX	2G	GENERATOR TRANSFER SWITCH		
		3 POLE - TYPE	MOLDED CASE	
		MOUNTING	FIXED	
		OPERATING VOLTAGE	480V	
		FRAME SIZE	1600A	
		TRIP SETTING	1600A (100% RATED)	
		INTERRUPT CAPACITY	65KA SYM	
		OPTIONS	GND FAULT	
MOTOR CONTROL CENTER ELEVATION LETTER			C	
INDOOR CONTROL PANEL WIDTH (MIN)			60"	
CONTROL BUILDING CONFIGURATION			CONTROL BUILDING	

LOAD CALCULATION			
ITEM	DESCRIPTION	HP	
1	PUMP NO. 1	215 HP	345A
2	PUMP NO. 2	215 HP	345A
3	PUMP NO. 3	215 HP	345A
4	PUMP NO. 4	215 HP	345A
5	PUMP NO. 5	90 HP	0A
6	PUMP NO. 6	90 HP	0A
7	30 KVA TRANSFORMER		36A
8	BIOSCRUBBER		36A
SUBTOTAL			1452A
25% OF LARGEST MOTOR LOAD			86A
MINIMUM AMPACITY @480V/3 Φ			1538A

* BASED ON SELECTED PUMP MFG DATA

NOTES:

1. FOR DESCRIPTION AND RATINGS OF ITEMS INDICATED WITH ROMAN NUMERAL FLAGS, SEE DEVICE RATINGS SCHEDULE.
2. CONTRACTOR SHALL VERIFY ACTUAL ELECTRIC VALUES OF MOTORS AND SIZE STARTERS, MOTOR CIRCUIT PROTECTORS, ETC. ACCORDINGLY.
3. POWER MONITOR.
4. PROVIDE FUSE ACCORDING TO MANUFACTURER'S REQUIREMENTS.
5. WHERE USED 320 SERIES METER, USE 400A AND BELOW DISCONNECT.
6. PROVIDE FULLY RATED BREAKER WITH KIRK KEY INTER-CONNECTED WITH GENERATOR/TRANSFER BREAKER.
7. PROVIDE 5A PRIMARY TO 4-20mA CURRENT TRANSDUCER.

NO.	DATE	REVISION	APP.

HATCH
750 TOWN & COUNTRY BLVD
SUITE 650
HOUSTON, TX 77024
P: 832-930-7670
TX FIRM NUMBER: F-314

SURVEYED BY:
AMANI ENGINEERING, INC.
FB NO. P-6357

STATE OF TEXAS
GUY N SEVERN
105809
LICENSED
PROFESSIONAL ENGINEER
7/21/2026

CITY OF HOUSTON
HOUSTON PUBLIC WORKS

LIFT STATION RENEWAL & REPLACEMENT PROJECT
BISSONNET #4 LS

SINGLE LINE DIAGRAM

WBS NUMBER	FOR CITY OF HOUSTON USE ONLY
R-000267-0173-4	HOUSTON PUBLIC WORKS ACCEPTED AND FILED 82825 CITY DRAWING NUMBER Approval Date 08/14/26 HOUSTON TX
DRAWING SCALE	
AS NOTED	
CITY OF HOUSTON PM	
NUPUR KRISHNAN P.E. N.K.	

N1E47

SHEET NO. 120 OF 274

PLOTTED: 8/11/2026 10:14 AM
PLOT STYLE: COH.ctb
FILE PATH: \\wusppplot01\d$\Global ProjectWise Plotting - WUS\Queue 4\queue4.dwg

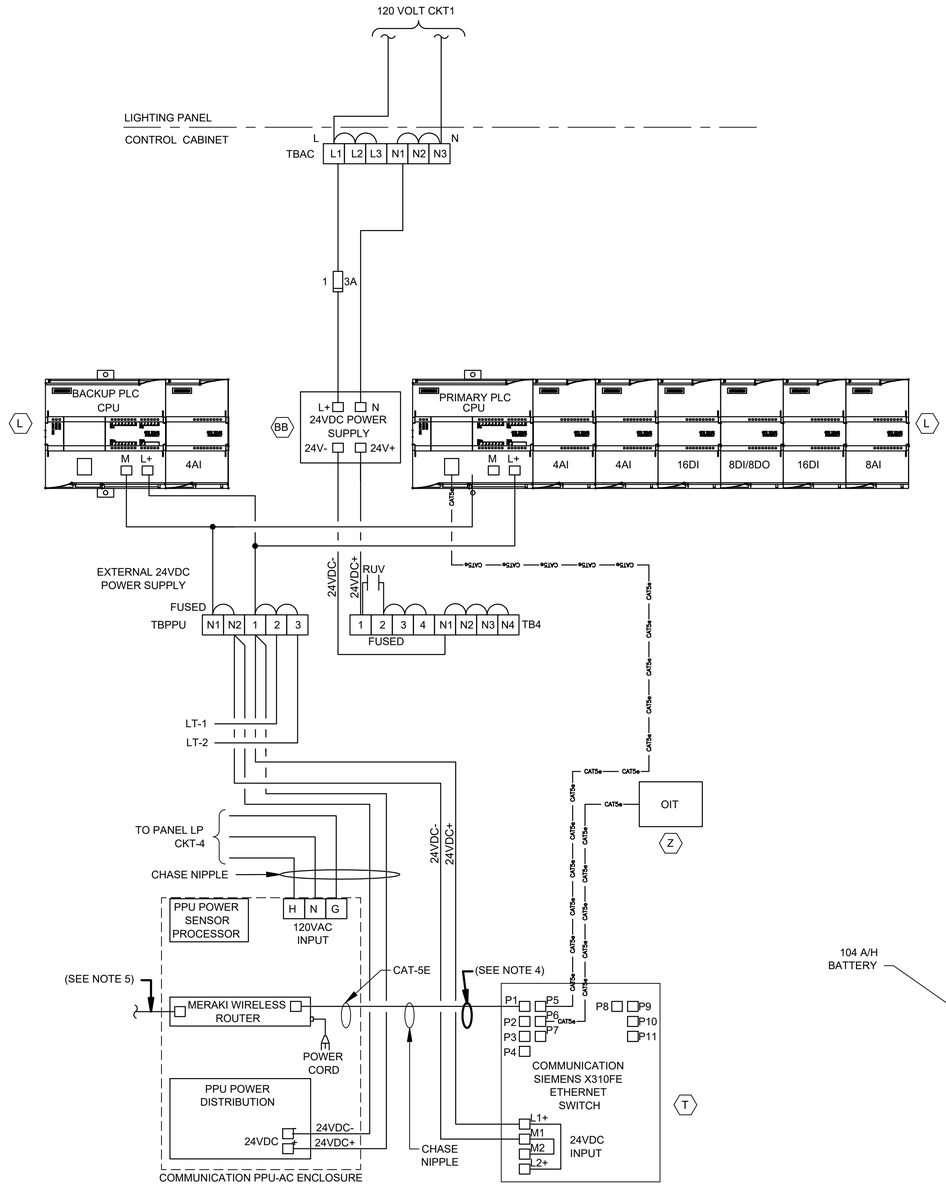

CONTROL POWER &
COMMUNICATIONS WIRING

DIAGRAM

NTS

(SEE NOTE 3)

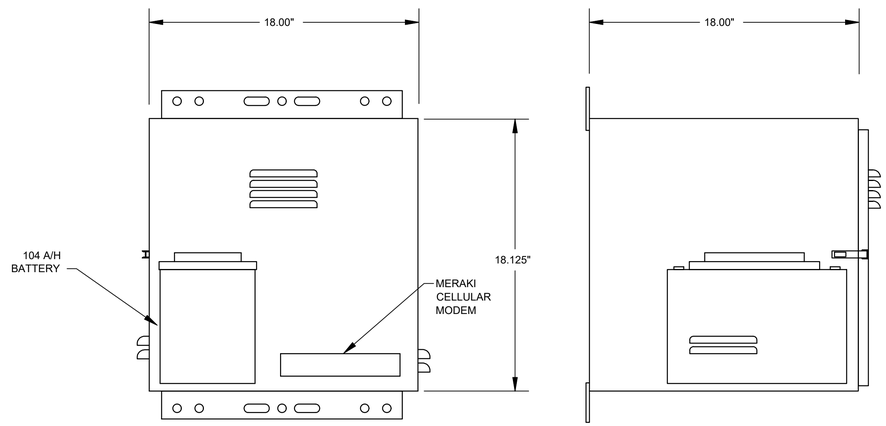

PPU-AC ENCLOSURE
FRONT VIEW

PPU-AC ENCLOSURE
SIDE VIEW

PPU-AC
CONTROL ENCLOSURE

ELEVATION

NTS

NOTES:

1. REFER TO SPEC SECTION 16120 FOR CONDUCTOR COLOR CODE.
2. THE PLC POWER SUPPLY SHALL FEED THE 24VDC I/O.
3. COMMUNICATION PPU-AC & SCADA SHALL BE PROVIDED BY CONTRACTOR INCLUDING TO RUN CONDUITS & WIRES.
4. ETHERNET CABLE FOR MERAKI CELLULAR ROUTER (P1).
5. POE CABLE TO RADIO.
6. SEE SHEET N1E43 FOR EQUIPMENT SCHEDULE.

NO.	DATE	REVISION	APP.

HATCH
750 TOWN & COUNTRY BLVD
SUITE 650
HOUSTON, TX 77024
P: 832-930-7670
TX FIRM NUMBER: F-314

SURVEYED BY:
AMANI ENGINEERING, INC.
FB NO. P-6357

STATE OF TEXAS
GUY N SEVERN
105809
LICENSED
PROFESSIONAL ENGINEER
7/21/2026

CITY OF HOUSTON

HOUSTON PUBLIC WORKS

LIFT STATION RENEWAL & REPLACEMENT PROJECT

BISSONNET #4 LS

COMMUNICATION DIAGRAM

WBS NUMBER
R-000267-0173-4
DRAWING SCALE
AS NOTED
CITY OF HOUSTON PM
NUPUR KRISHNAN P.E. N.K.
SHEET NO. 121 OF 274

FOR CITY OF HOUSTON USE ONLY

HOUSTON PUBLIC WORKS
ACCEPTED AND FILED
82825
CITY DRAWING NUMBER
Approval Date 08/14/26
HOUSTON TX

N1E48

PLOTTED: 8/11/2026 10:24 AM
PLOT STYLE: COH.ctb
FILE PATH: \\wusppplot01\d$\Global ProjectWise Plotting - WUS\Queue 2\queue2.dwg

PLOTTED: 8/11/2026 10:21 AM
PLOT STYLE: COH.ctb
FILE PATH: \\wusppplot01\d$\Global ProjectWise Plotting - WUS\Queue 3\queue3.dwg

NO.	DATE	REVISION	APP.

HMI

CONTROL CABINET (PLC)

CONTROL BUILDING

480V

PUMPS MCC

POWER & CONTROL CABINET

INFLUENT PUMP NO. 1 | INFLUENT PUMP NO. 2 | INFLUENT PUMP NO. 3 | INFLUENT PUMP NO. 4 | INFLUENT PUMP NO. 5

IN SS IS 1 | IN SS IS 2 | IN SS IS 3 | IN SS IS 4 | IN SS IS 5

SEAL FAIL ALARM	MOTOR OVERLOAD ALARM	MOTOR CURRENT	HIGH TEMP ALARM	IN HAND	IN AUTO	ON/OFF	START/ STOP
MA 1	MO 1	II 1	TH 1	HI 1	IA 1	YFS 1	YCS 1
MA 2	MO 2	II 2	TH 2	HI 2	IA 2	YFS 2	YCS 2
MA 3	MO 3	II 3	TH 3	HI 3	IA 3	YFS 3	YCS 3
MA 4	MO 4	II 4	TH 4	HI 4	IA 4	YFS 4	YCS 4
MA 5	MO 5	II 5	TH 5	HI 5	IA 5	YFS 5	YCS 5

PUMP NO. 1 H/O/A RUN | PUMP NO. 2 H/O/A RUN | PUMP NO. 3 H/O/A RUN | PUMP NO. 4 H/O/A RUN | PUMP NO. 5 H/O/A RUN | PUMP NO. 6 H/O/A RUN

PRIMARY PLC | BACKUP PLC

PUMP CONTROL PANEL

ALARMS RESET | OIT

TO SHEET N1E50

N1E50

N1E50

WET WELL

TSH 1A	LSH 1A	M	PUMP No. 1	20"-DIP → 42"x20 RED. TEE
TSH 2A	LSH 2A	M	PUMP No. 2	20"-DIP → 42"x20 RED. TEE
TSH 3A	LSH 3A	M	PUMP No. 3	20"-DIP → 42"x20 RED. TEE
TSH 4A	LSH 4A	M	PUMP No. 4	20"-DIP → 42"x20 RED. TEE
TSH 5A	LSH 5A	M	PUMP No. 5	20"-DIP → 42"x20 RED. TEE
TSH 6A	LSH 6A	M	PUMP No. 6	20"-DIP → 42"x20 RED. TEE

LT 1 / LE 1 | LT 2 / LE 2

FS2 HIGH-HIGH LEVEL FLOAT SWITCH

FS1 HIGH LEVEL FLOAT SWITCH

42"-DIP → DISCHARGE

HATCH
750 TOWN & COUNTRY BLVD
SUITE 650
HOUSTON, TX 77024
P: 832-930-7670
TX FIRM NUMBER: F-314

SURVEYED BY:
AMANI ENGINEERING, INC.
FB NO. P-6357

STATE OF TEXAS
GUY N SEVERN
105809
LICENSED PROFESSIONAL ENGINEER
7/21/2026

CITY OF HOUSTON
HOUSTON PUBLIC WORKS

LIFT STATION RENEWAL & REPLACEMENT PROJECT
BISSONNET #4 LS

PROCESS & INSTRUMENTATION DIAGRAM-1

WBS NUMBER	FOR CITY OF HOUSTON USE ONLY
R-000267-0173-4	HOUSTON PUBLIC WORKS ACCEPTED AND FILED
DRAWING SCALE	82825 CITY DRAWING NUMBER
AS NOTED	Approval Date 08/14/26 HOUSTON TX
CITY OF HOUSTON PM	
NUPUR KRISHNAN P.E. N.K.	
SHEET NO. 122 OF 274	

N1E49

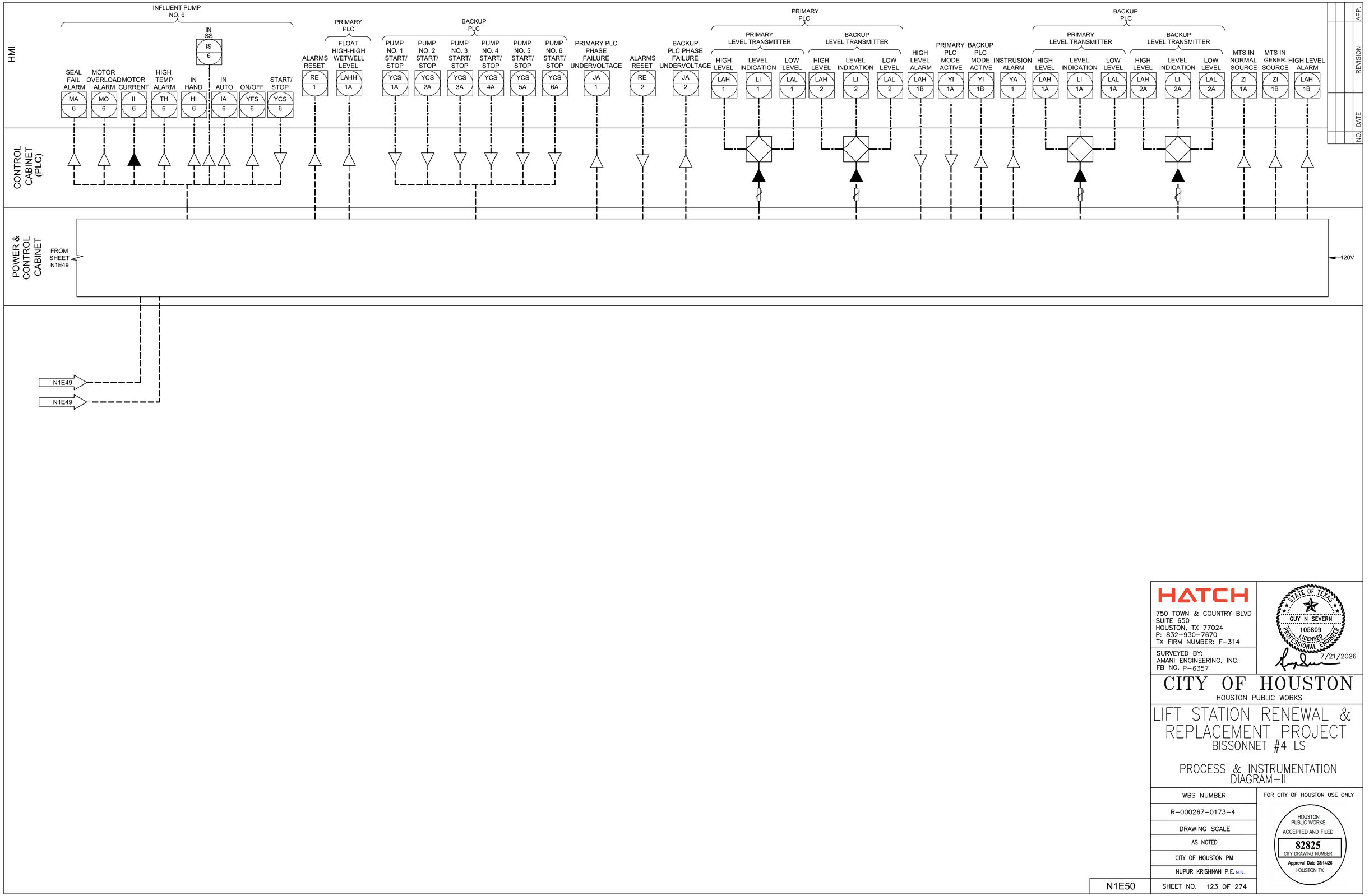

PLOTTED: 8/11/2026 10:20 AM

PLOT STYLE: COH.ctb

FILE PATH: \\wusppplot01\d$\Global ProjectWise Plotting - WUS\Queue 4\queue4.dwg

HATCH
750 TOWN & COUNTRY BLVD
SUITE 650
HOUSTON, TX 77024
P: 832-930-7670
TX FIRM NUMBER: F-314

SURVEYED BY:
AMANI ENGINEERING, INC.
FB NO. P-6357

STATE OF TEXAS
GUY N SEVERN
105809
LICENSED
PROFESSIONAL ENGINEER
7/21/2026

CITY OF HOUSTON

HOUSTON PUBLIC WORKS

LIFT STATION RENEWAL & REPLACEMENT PROJECT
BISSONNET #4 LS

PROCESS & INSTRUMENTATION DIAGRAM-II

WBS NUMBER
R-000267-0173-4
DRAWING SCALE
AS NOTED
CITY OF HOUSTON PM
NUPUR KRISHNAN P.E. N.K.

FOR CITY OF HOUSTON USE ONLY

HOUSTON PUBLIC WORKS
ACCEPTED AND FILED
82825
CITY DRAWING NUMBER
Approval Date 08/14/26
HOUSTON TX

N1E50

SHEET NO. 123 OF 274

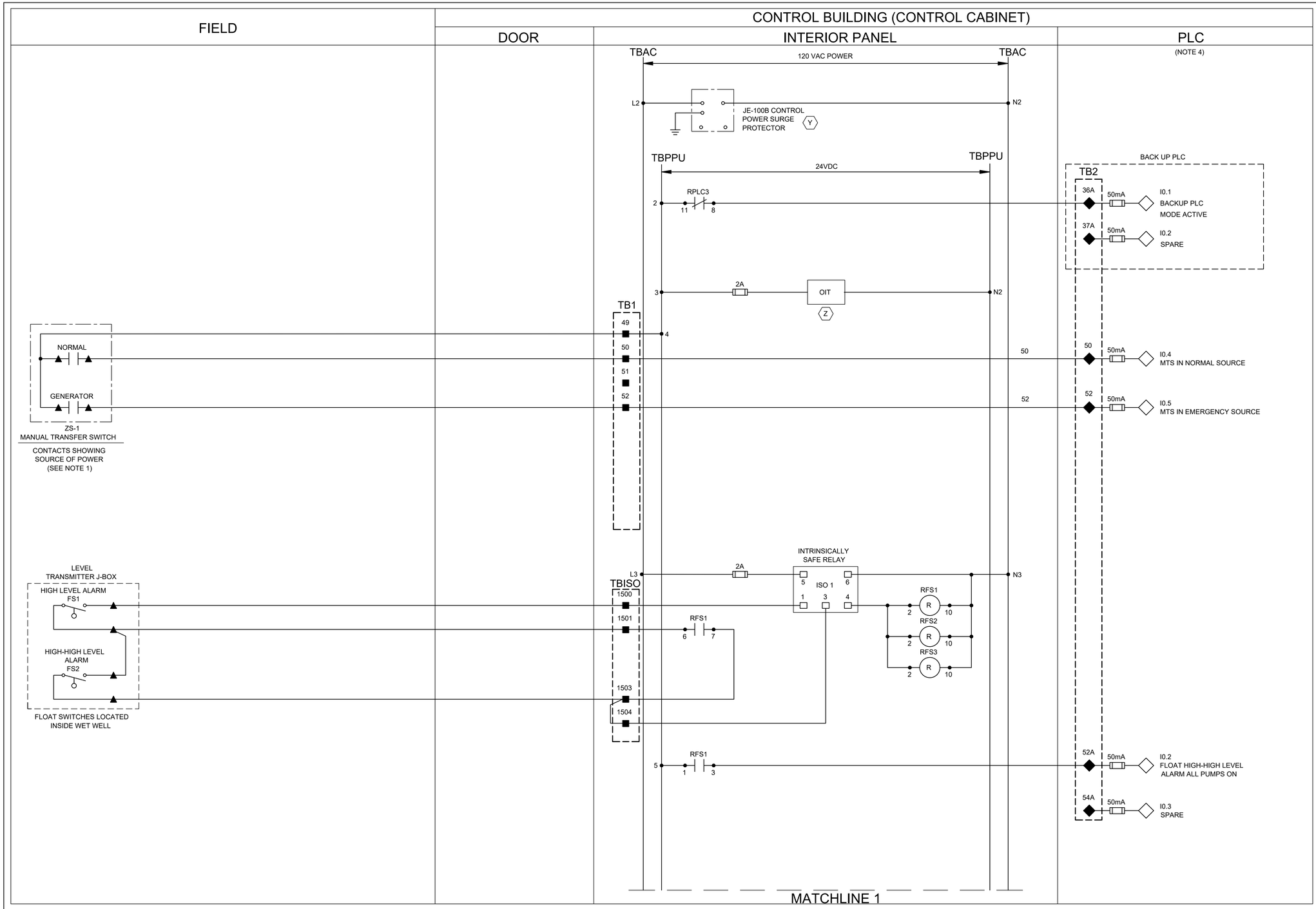

NOTES:

1. PROVIDE MANUAL TRANSFER SWITCH DRY CONTACT.
2. ALL FLOAT CONTROL CIRCUIT WIRES COLOR SHALL BE YELLOW.
3. SEE SHEET N1E43 FOR EQUIPMENT AND DEVICE SCHEDULE.
4. PRIMARY PLC UNLESS INDICATED OTHERWISE.

NO.	DATE	REVISION	APP.

LEGEND

- △ DEVICE OR FIELD TERMINAL LOCATED AT MOTOR
- ✳ DEVICE OR FIELD TERMINAL LOCATED REMOTE
- □ DEVICE OR FIELD TERMINAL LOCATED AT MCC/POWER PANEL
- ■ FIELD TERMINAL LOCATED AT CONTROL PANEL
- ▲ REMOTE TERMINAL
- ● DEVICE TERMINAL NO.
- ◆ PLC INTERFACE TERMINAL

HATCH
750 TOWN & COUNTRY BLVD
SUITE 650
HOUSTON, TX 77024
P: 832-930-7670
TX FIRM NUMBER: F-314

SURVEYED BY:
AMANI ENGINEERING, INC.
FB NO. P-6357

STATE OF TEXAS
GUY N SEVERN
105809
LICENSED
PROFESSIONAL ENGINEER
7/21/2026

CITY OF HOUSTON
HOUSTON PUBLIC WORKS

LIFT STATION RENEWAL & REPLACEMENT PROJECT
BISSONNET #4 LS

CONTROL CABINET
CONTROL WIRING DIAGRAM-I

WBS NUMBER
R-000267-0173-4
DRAWING SCALE
AS NOTED
CITY OF HOUSTON PM
NUPUR KRISHNAN P.E. N.K.

FOR CITY OF HOUSTON USE ONLY

HOUSTON PUBLIC WORKS
ACCEPTED AND FILED
82825
CITY DRAWING NUMBER
Approval Date 08/14/26
HOUSTON TX

N1E51

SHEET NO. 124 OF 274

PLOTTED: 8/11/2026 10:27 AM
PLOT STYLE: COH.ctb
FILE PATH: \\wuspplot01\d$\Global ProjectWise Plotting - WUS\Queue 2\queue2.dwg

PLOT STYLE: COH.ctb
PLOTTED: 8/11/2026 10:24 AM
FILE PATH: \\wuspplot01\d$\Global ProjectWise Plotting - WUS\Queue 1\queue1.dwg

NO.	DATE	REVISION	APP.

FIELD

CONTROL BUILDING (CONTROL CABINET)

DOOR

INTERIOR PANEL

PLC

(NOTE 4)

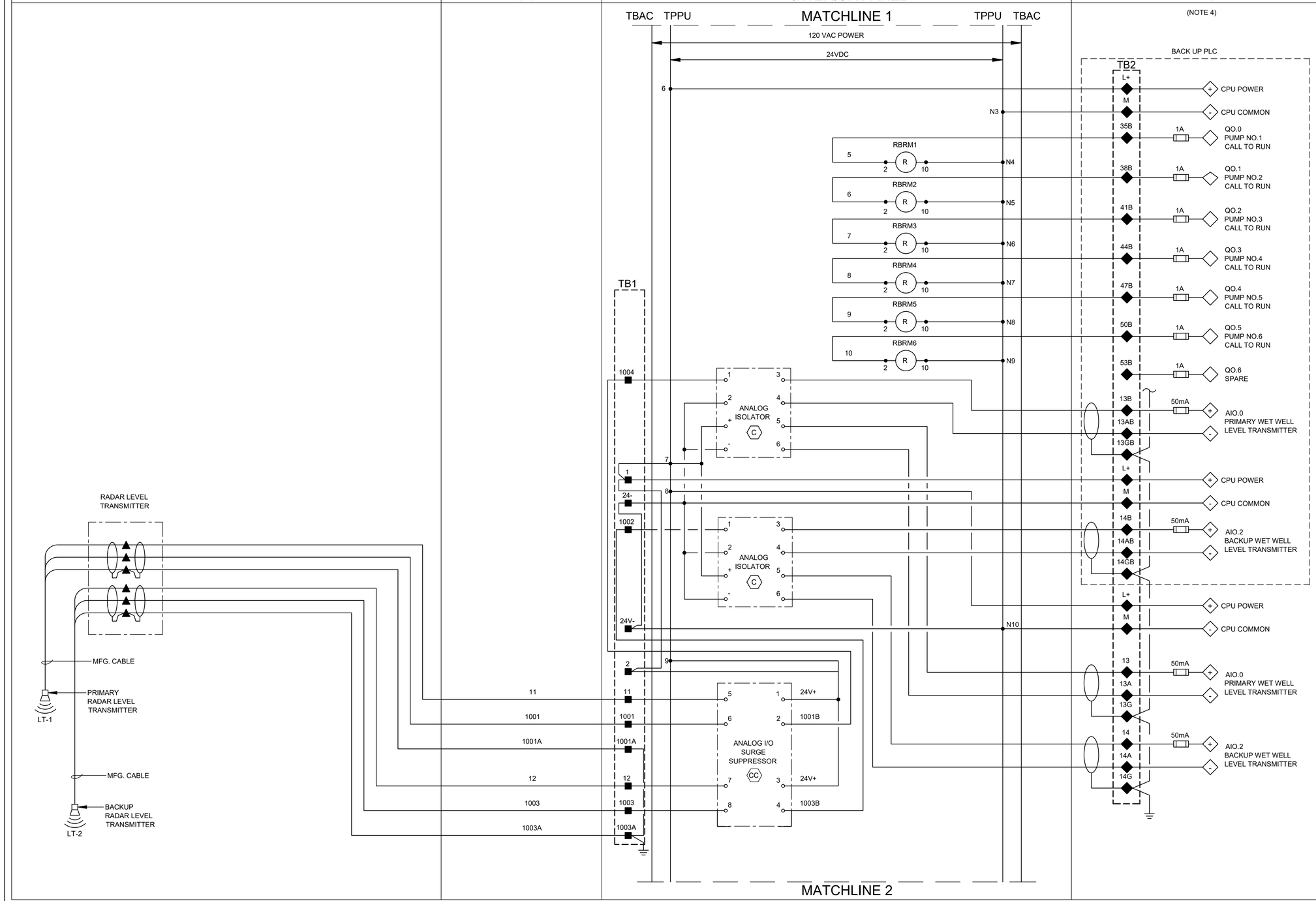

NOTES:

1. SEE SHEET N1E43 FOR EQUIPMENT AND DEVICE SCHEDULE.
2. PRIMARY PLC UNLESS INDICATED OTHERWISE.

LEGEND

- △ DEVICE OR FIELD TERMINAL LOCATED AT MOTOR
- ✳ DEVICE OR FIELD TERMINAL LOCATED REMOTE
- □ DEVICE OR FIELD TERMINAL LOCATED AT MCC/POWER PANEL
- ■ FIELD TERMINAL LOCATED AT CONTROL PANEL
- ▲ REMOTE TERMINAL
- ● DEVICE TERMINAL NO.
- ◆ PLC INTERFACE TERMINAL

HATCH
750 TOWN & COUNTRY BLVD
SUITE 650
HOUSTON, TX 77024
P: 832-930-7670
TX FIRM NUMBER: F-314

SURVEYED BY:
AMANI ENGINEERING, INC.
FB NO. P-6357

STATE OF TEXAS
GUY N SEVERN
105809
LICENSED PROFESSIONAL ENGINEER
7/21/2026

CITY OF HOUSTON

HOUSTON PUBLIC WORKS

LIFT STATION RENEWAL & REPLACEMENT PROJECT

BISSONNET #4 LS

CONTROL CABINET CONTROL WIRING DIAGRAM-II

WBS NUMBER	FOR CITY OF HOUSTON USE ONLY
R-000267-0173-4	HOUSTON PUBLIC WORKS ACCEPTED AND FILED 82825 CITY DRAWING NUMBER Approval Date 08/14/26 HOUSTON TX
DRAWING SCALE	
AS NOTED	
CITY OF HOUSTON PM	
NUPUR KRISHNAN P.E. N.K.	
N1E52	SHEET NO. 125 OF 274

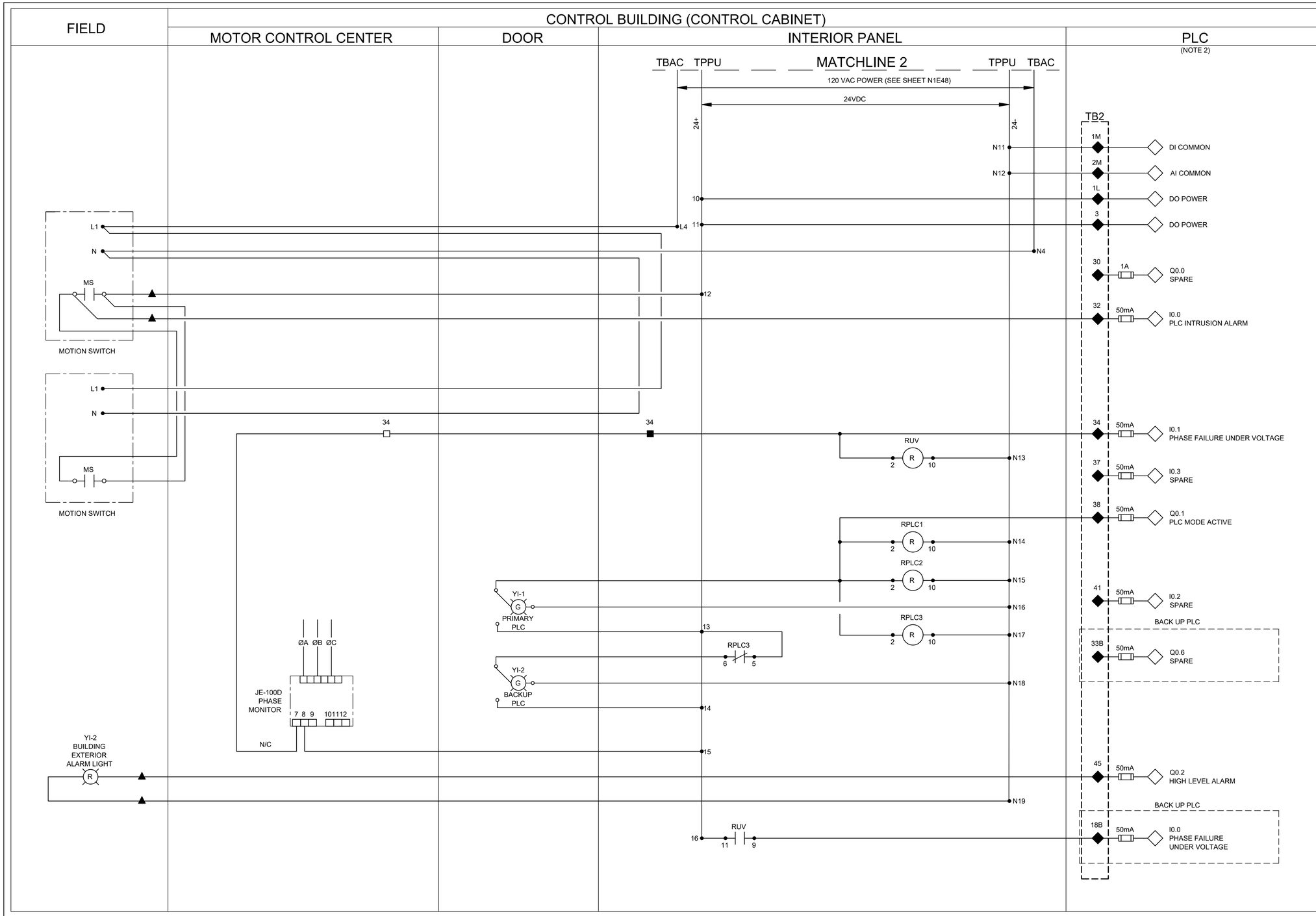

NOTES:

1. SEE SHEET N1E43 FOR EQUIPMENT AND DEVICE SCHEDULE.
2. PRIMARY PLC UNLESS INDICATED OTHERWISE.

LEGEND

- △ DEVICE OR FIELD TERMINAL LOCATED AT MOTOR
- ✳ DEVICE OR FIELD TERMINAL LOCATED REMOTE
- □ DEVICE OR FIELD TERMINAL LOCATED AT MCC/POWER PANEL
- ■ FIELD TERMINAL LOCATED AT CONTROL PANEL
- ▲ REMOTE TERMINAL
- ● DEVICE TERMINAL NO.
- ◆ PLC INTERFACE TERMINAL

NO.	DATE	REVISION	APP.

HATCH
750 TOWN & COUNTRY BLVD
SUITE 650
HOUSTON, TX 77024
P: 832-930-7670
TX FIRM NUMBER: F-314

SURVEYED BY:
AMANI ENGINEERING, INC.
FB NO. P-6357

STATE OF TEXAS
GUY N SEVERN
105809
LICENSED
PROFESSIONAL ENGINEER
7/21/2026

CITY OF HOUSTON
HOUSTON PUBLIC WORKS

LIFT STATION RENEWAL & REPLACEMENT PROJECT
BISSONNET #4 LS

CONTROL CABINET
CONTROL WIRING DIAGRAM-III

WBS NUMBER
R-000267-0173-4
DRAWING SCALE
AS NOTED
CITY OF HOUSTON PM
NUPUR KRISHNAN P.E. N.K.
SHEET NO. 126 OF 274

FOR CITY OF HOUSTON USE ONLY

HOUSTON PUBLIC WORKS
ACCEPTED AND FILED
82825
CITY DRAWING NUMBER
Approval Date 08/14/26
HOUSTON TX

N1E53

PLOTTED: 8/11/2026 10:18 AM
PLOT STYLE: COH.ctb
FILE PATH: \\wusppplot01\d$\Global ProjectWise Plotting - WUS\Queue 2\queue2.dwg

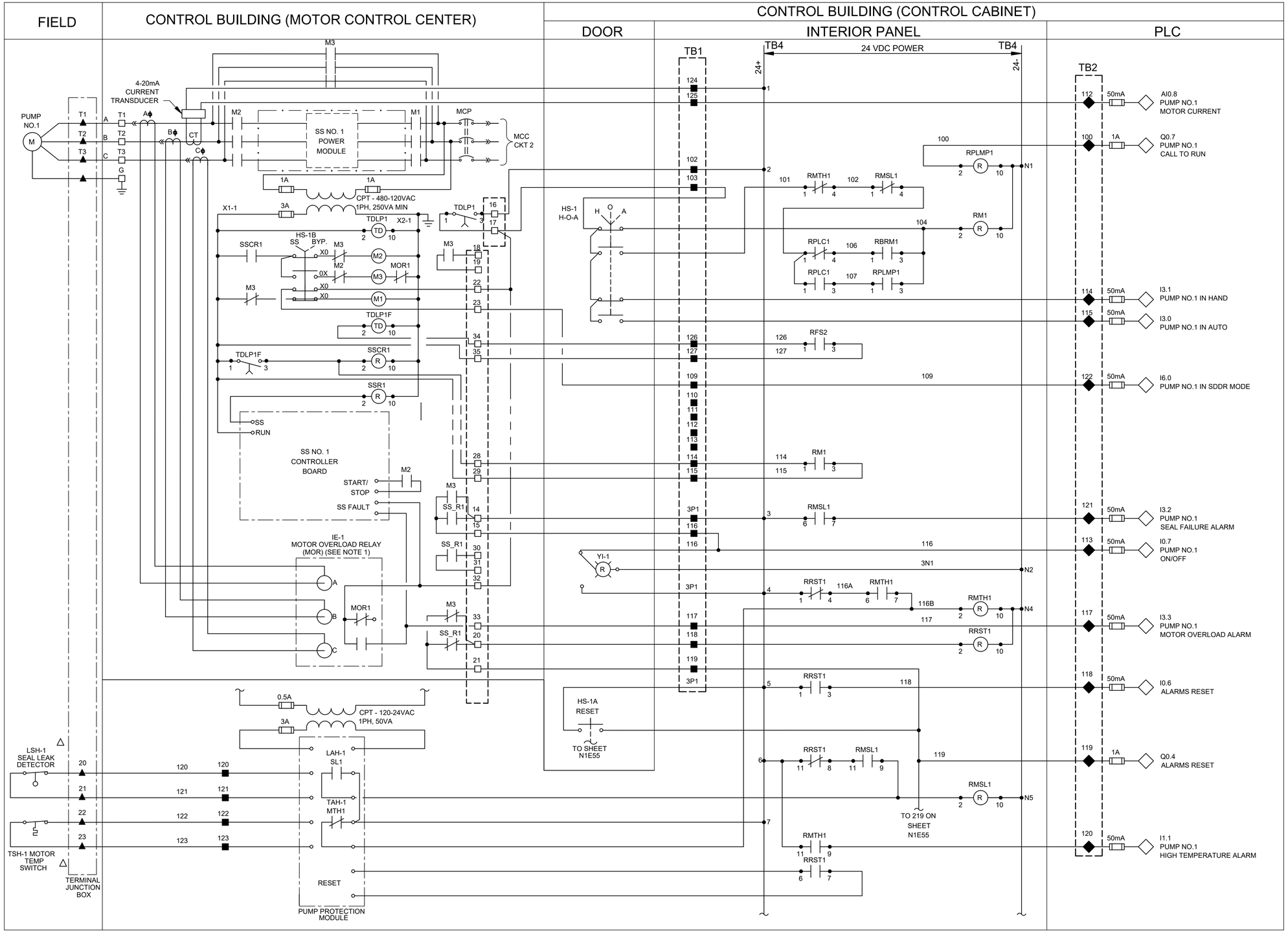

NOTES:

1. MOTOR OVERLOAD RELAY OUTPUT CONTACT SHOWN NORMALLY CLOSED WHEN RELAY IS DE-ENERGIZED, OPEN WHEN ENERGIZED, AND CLOSED WHEN IN ALARM. VERIFY OPERATION OF RELAY PROVIDED AND ADJUST CONNECTION OF RMOR AUXILIARY RELAYS.
2. FUSED TERMINAL ON TERMINAL BLOCK TB4 SEE CONTROL POWER AND COMMUNICATION WIRING DIAGRAM DRAWING NO. N1E48.
3. ALL FLOAT CONTROL CIRCUIT WIRES COLOR SHALL BE YELLOW.

LEGEND

- △ DEVICE OR FIELD TERMINAL LOCATED AT MOTOR
- ✳ DEVICE OR FIELD TERMINAL LOCATED REMOTE
- □ DEVICE OR FIELD TERMINAL LOCATED AT MCC/POWER PANEL
- ■ FIELD TERMINAL LOCATED AT CONTROL PANEL
- ▲ REMOTE TERMINAL
- ● DEVICE TERMINAL NO.
- ◆ PLC INTERFACE TERMINAL

HATCH
750 TOWN & COUNTRY BLVD
SUITE 650
HOUSTON, TX 77024
P: 832-930-7670
TX FIRM NUMBER: F-314

SURVEYED BY:
AMANI ENGINEERING, INC.
FB NO. P-6357

STATE OF TEXAS
GUY N SEVERN
105809
LICENSED PROFESSIONAL ENGINEER
7/21/2026

CITY OF HOUSTON

HOUSTON PUBLIC WORKS

LIFT STATION RENEWAL & REPLACEMENT PROJECT

BISSONNET #4 LS

PUMP NO.1
CONTROL WIRING DIAGRAM

WBS NUMBER	FOR CITY OF HOUSTON USE ONLY
R-000267-0173-4	HOUSTON PUBLIC WORKS ACCEPTED AND FILED 82825 CITY DRAWING NUMBER Approval Date 08/14/26 HOUSTON TX
DRAWING SCALE	
AS NOTED	
CITY OF HOUSTON PM	
NUPUR KRISHNAN P.E. N.K.	
SHEET NO. 127 OF 274	

N1E54

NO.	DATE	REVISION	APP.

PLOTTED: 8/11/2026 10:24 AM
PLOT STYLE: COH.ctb
FILE PATH: \\wusppplot01\d$\Global ProjectWise Plotting - WUS\Queue 3\queue3.dwg

FIELD | CONTROL BUILDING (MOTOR CONTROL CENTER) | CONTROL BUILDING (CONTROL CABINET) — DOOR | INTERIOR PANEL | PLC

PUMP NO.2
M
T1 T2 T3 G
A B C
4-20mA CURRENT TRANSDUCER
CT
M3
M2
M1
MCP
SS NO. 2 POWER MODULE
MCC CKT 3
1A 1A
CPT - 480-120VAC 1PH, 250VA MIN
3A
X1-2
X2-2
TDLP2
TD
SSCR2
HS-2B
SS BYP.
M3 X0
M2 0X
MOR2
M1
TDLP2F
SSCR2
R
SS_R2
SS
RUN
SS NO. 2 CONTROLLER BOARD
START/ STOP
SS FAULT
IE-2
MOTOR OVERLOAD RELAY (MOR) (SEE NOTE 1)
MOR2
0.5A
CPT - 120-24VAC 1PH, 50VA
3A
LSH-2
SEAL LEAK DETECTOR
TSH-2 MOTOR TEMP SWITCH
TERMINAL JUNCTION BOX
LAH-2
SL2
TAH-2
MTH2
RESET
PUMP PROTECTION MODULE

HS-2
H-O-A
YI-2
FROM SHEET N1E54
TO SHEET N1E56
FROM 119 ON SHEET N1E54
TO 319 ON SHEET N1E56

TB1
TB4
24 VDC POWER
24+
24-
TB2
RPLMP2
RMTH2
RMSL2
RPLC1
RBRM2
RM2
RFS2
RRST2
216A
216B

TB2		
212	50mA	AI1.0 PUMP NO.2 MOTOR CURRENT
200	1A	Q1.0 PUMP NO.2 CALL TO RUN
214	50mA	I3.5 PUMP NO.2 IN HAND
215	50mA	I3.4 PUMP NO.2 IN AUTO
222	50mA	I6.2 PUMP NO.2 IN SS MODE
221	50mA	I3.6 PUMP NO.2 SEAL FAILURE ALARM
213	50mA	I1.2 PUMP NO.2 ON/OFF
217	50mA	I3.7 PUMP NO.2 MOTOR OVERLOAD ALARM
220	50mA	I1.3 PUMP NO.2 HIGH TEMPERATURE ALARM

NOTES:

1. MOTOR OVERLOAD RELAY OUTPUT CONTACT SHOWN NORMALLY CLOSED WHEN RELAY IS DE-ENERGIZED, OPEN WHEN ENERGIZED, AND CLOSED WHEN IN ALARM. VERIFY OPERATION OF RELAY PROVIDED AND ADJUST CONNECTION OF RMOR AUXILIARY RELAYS.
2. FUSED TERMINAL ON TERMINAL BLOCK TB4 SEE CONTROL POWER AND COMMUNICATION WIRING DIAGRAM DRAWING NO. N1E48.
3. ALL FLOAT CONTROL CIRCUIT WIRES COLOR SHALL BE YELLOW.

LEGEND

- △ DEVICE OR FIELD TERMINAL LOCATED AT MOTOR
- ✳ DEVICE OR FIELD TERMINAL LOCATED REMOTE
- □ DEVICE OR FIELD TERMINAL LOCATED AT MCC/POWER PANEL
- ■ FIELD TERMINAL LOCATED AT CONTROL PANEL
- ▲ REMOTE TERMINAL
- ● DEVICE TERMINAL NO.
- ◆ PLC INTERFACE TERMINAL

NO.	DATE	REVISION	APP.

HATCH
750 TOWN & COUNTRY BLVD
SUITE 650
HOUSTON, TX 77024
P: 832-930-7670
TX FIRM NUMBER: F-314

SURVEYED BY:
AMANI ENGINEERING, INC.
FB NO. P-6357

STATE OF TEXAS — GUY N SEVERN — 105809 — LICENSED PROFESSIONAL ENGINEER — 7/21/2026

CITY OF HOUSTON
HOUSTON PUBLIC WORKS

LIFT STATION RENEWAL & REPLACEMENT PROJECT
BISSONNET #4 LS

PUMP NO.2 CONTROL WIRING DIAGRAM

WBS NUMBER	FOR CITY OF HOUSTON USE ONLY
R-000267-0173-4	HOUSTON PUBLIC WORKS ACCEPTED AND FILED 82825 CITY DRAWING NUMBER Approval Date 08/14/26 HOUSTON TX
DRAWING SCALE	
AS NOTED	
CITY OF HOUSTON PM	
NUPUR KRISHNAN P.E. N.K.	

N1E55 | SHEET NO. 128 OF 274

PLOTTED: 8/11/2026 10:23 AM
PLOT STYLE: COH.ctb
FILE PATH: \\wusppplot01\d$\Global ProjectWise Plotting - WUS\Queue 5\queue5.dwg

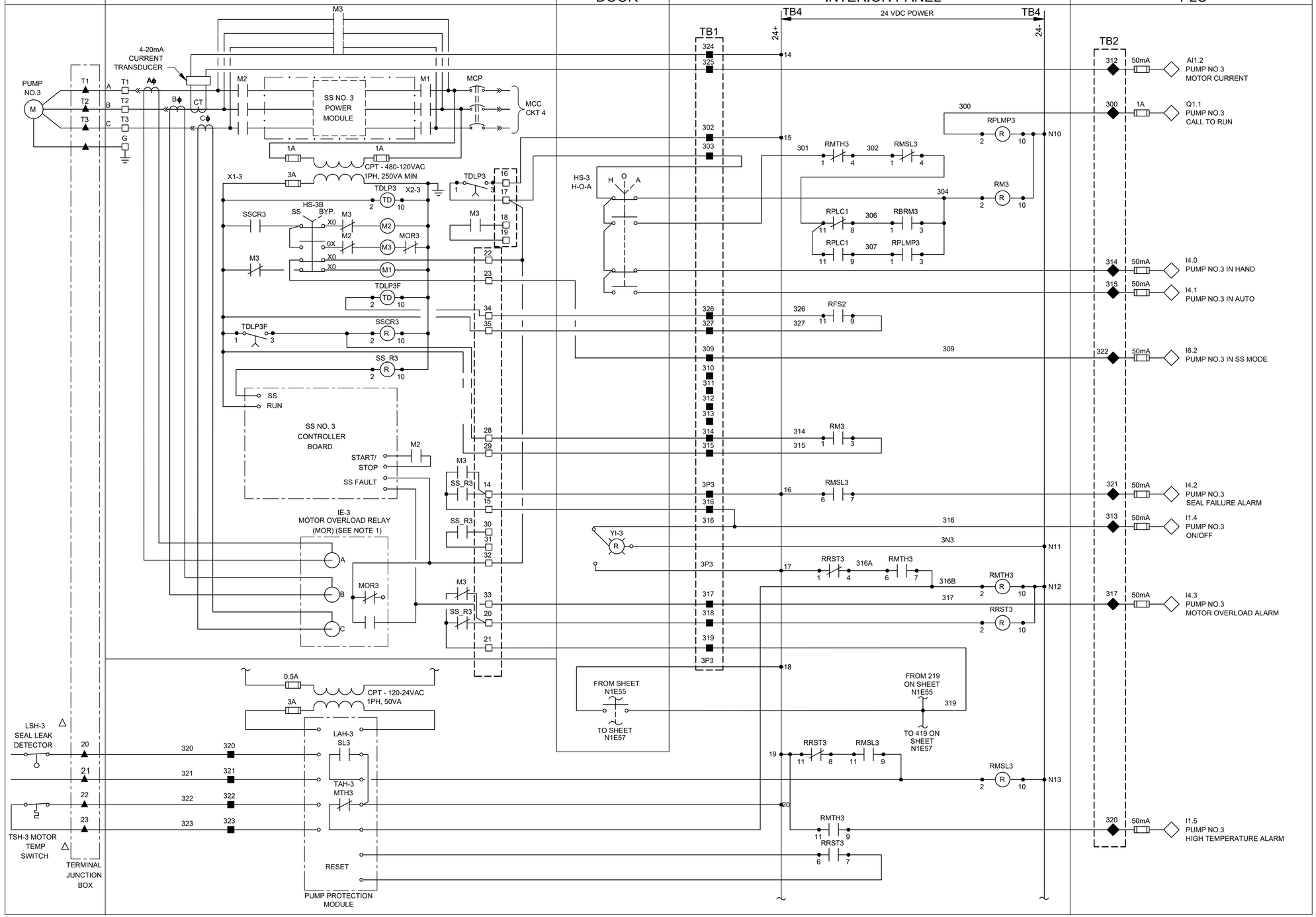

NOTES:

1. MOTOR OVERLOAD RELAY OUTPUT CONTACT SHOWN NORMALLY CLOSED WHEN RELAY IS DE-ENERGIZED, OPEN WHEN ENERGIZED, AND CLOSED WHEN IN ALARM. VERIFY OPERATION OF RELAY PROVIDED AND ADJUST CONNECTION OF RMOR AUXILIARY RELAYS.
2. FUSED TERMINAL ON TERMINAL BLOCK TB4 SEE CONTROL POWER AND COMMUNICATION WIRING DIAGRAM DRAWING NO. N1E48.
3. ALL FLOAT CONTROL CIRCUIT WIRES COLOR SHALL BE YELLOW.

LEGEND

- △ DEVICE OR FIELD TERMINAL LOCATED AT MOTOR
- ✳ DEVICE OR FIELD TERMINAL LOCATED REMOTE
- □ DEVICE OR FIELD TERMINAL LOCATED AT MCC/POWER PANEL
- ■ FIELD TERMINAL LOCATED AT CONTROL PANEL
- ▲ REMOTE TERMINAL
- ● DEVICE TERMINAL NO.
- ◆ PLC INTERFACE TERMINAL

NO.	DATE	REVISION	APP.

HATCH
750 TOWN & COUNTRY BLVD
SUITE 650
HOUSTON, TX 77024
P: 832-930-7670
TX FIRM NUMBER: F-314

SURVEYED BY:
AMANI ENGINEERING, INC.
FB NO. P-6357

STATE OF TEXAS
GUY N SEVERN
105809
LICENSED PROFESSIONAL ENGINEER
7/21/2026

CITY OF HOUSTON
HOUSTON PUBLIC WORKS

LIFT STATION RENEWAL & REPLACEMENT PROJECT
BISSONNET #4 LS

PUMP NO.3
CONTROL WIRING DIAGRAM

WBS NUMBER	FOR CITY OF HOUSTON USE ONLY
R-000267-0173-4	HOUSTON PUBLIC WORKS ACCEPTED AND FILED 82825 CITY DRAWING NUMBER Approval Date 08/14/26 HOUSTON TX
DRAWING SCALE	
AS NOTED	
CITY OF HOUSTON PM	
NUPUR KRISHNAN P.E. N.K.	
SHEET NO. 129 OF 274	

N1E56

PLOTTED: 8/11/2026 10:18 AM
PLOT STYLE: COH.ctb
FILE PATH: \\wusppplot01\d$\Global ProjectWise Plotting - WUS\Queue 1\queue1.dwg

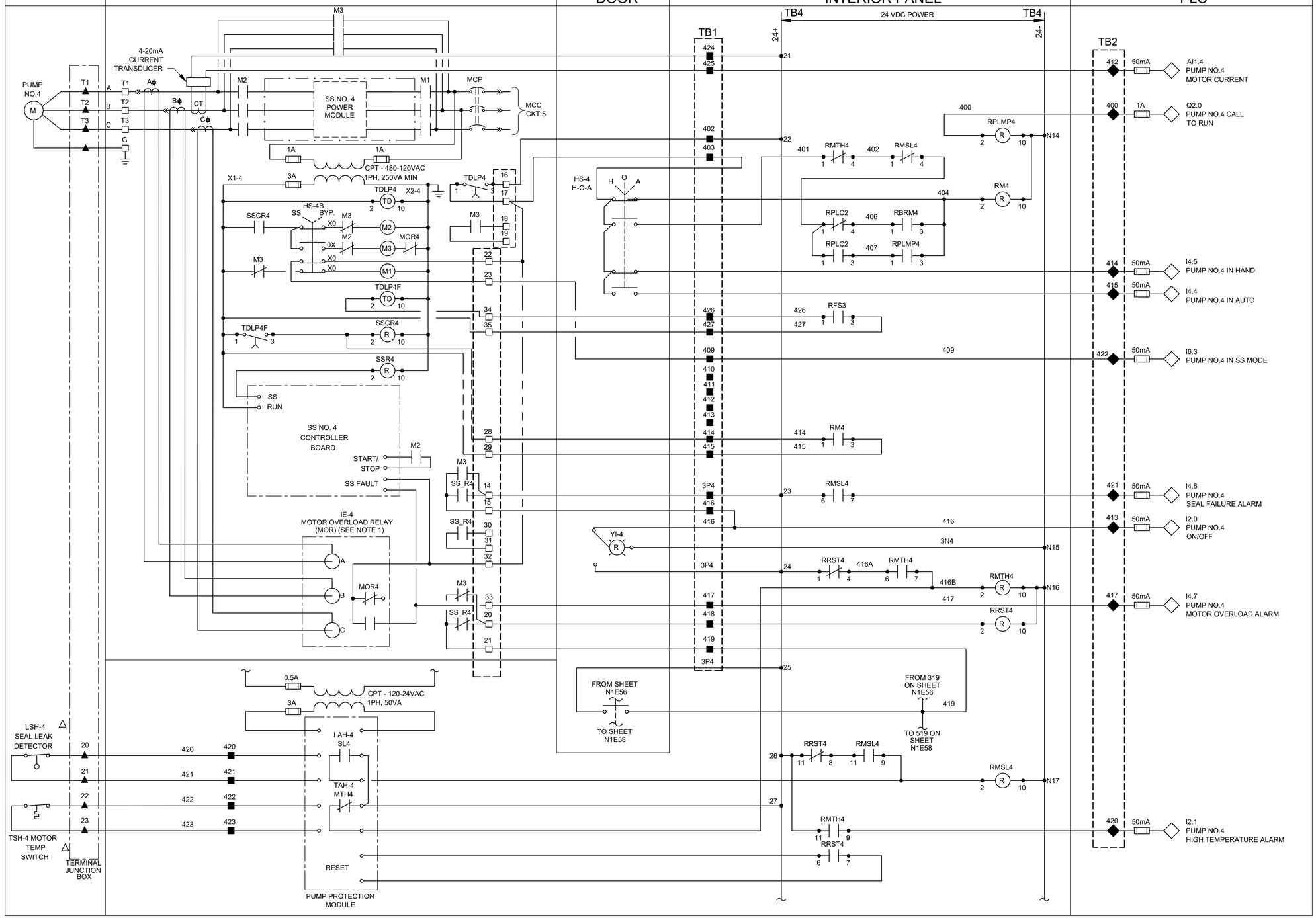

NOTES:

1. MOTOR OVERLOAD RELAY OUTPUT CONTACT SHOWN NORMALLY CLOSED WHEN RELAY IS DE-ENERGIZED, OPEN WHEN ENERGIZED, AND CLOSED WHEN IN ALARM. VERIFY OPERATION OF RELAY PROVIDED AND ADJUST CONNECTION OF RMOR AUXILIARY RELAYS.
2. FUSED TERMINAL ON TERMINAL BLOCK TB4 SEE CONTROL POWER AND COMMUNICATION WIRING DIAGRAM DRAWING NO. N1E48.
3. ALL FLOAT CONTROL CIRCUIT WIRES COLOR SHALL BE YELLOW.

LEGEND

- △ DEVICE OR FIELD TERMINAL LOCATED AT MOTOR
- ✳ DEVICE OR FIELD TERMINAL LOCATED REMOTE
- □ DEVICE OR FIELD TERMINAL LOCATED AT MCC/POWER PANEL
- ■ FIELD TERMINAL LOCATED AT CONTROL PANEL
- ▲ REMOTE TERMINAL
- ● DEVICE TERMINAL NO.
- ◆ PLC INTERFACE TERMINAL

NO.	DATE	REVISION	APP.

HATCH
750 TOWN & COUNTRY BLVD
SUITE 650
HOUSTON, TX 77024
P: 832-930-7670
TX FIRM NUMBER: F-314

SURVEYED BY:
AMANI ENGINEERING, INC.
FB NO. P-6357

STATE OF TEXAS
GUY N SEVERN
105809
LICENSED PROFESSIONAL ENGINEER
7/21/2026

CITY OF HOUSTON
HOUSTON PUBLIC WORKS

LIFT STATION RENEWAL & REPLACEMENT PROJECT
BISSONNET #4 LS

PUMP NO.4
CONTROL WIRING DIAGRAM

WBS NUMBER	FOR CITY OF HOUSTON USE ONLY
R-000267-0173-4	HOUSTON PUBLIC WORKS ACCEPTED AND FILED 82825 CITY DRAWING NUMBER Approval Date 08/14/26 HOUSTON TX
DRAWING SCALE	
AS NOTED	
CITY OF HOUSTON PM	
NUPUR KRISHNAN P.E. N.K.	
SHEET NO. 130 OF 274	

N1E57

PLOTTED: 8/11/2026 10:17 AM
PLOT STYLE: COH.ctb
FILE PATH: \\wusppplot01\d$\Global ProjectWise Plotting - WUS\Queue 4\queue4.dwg

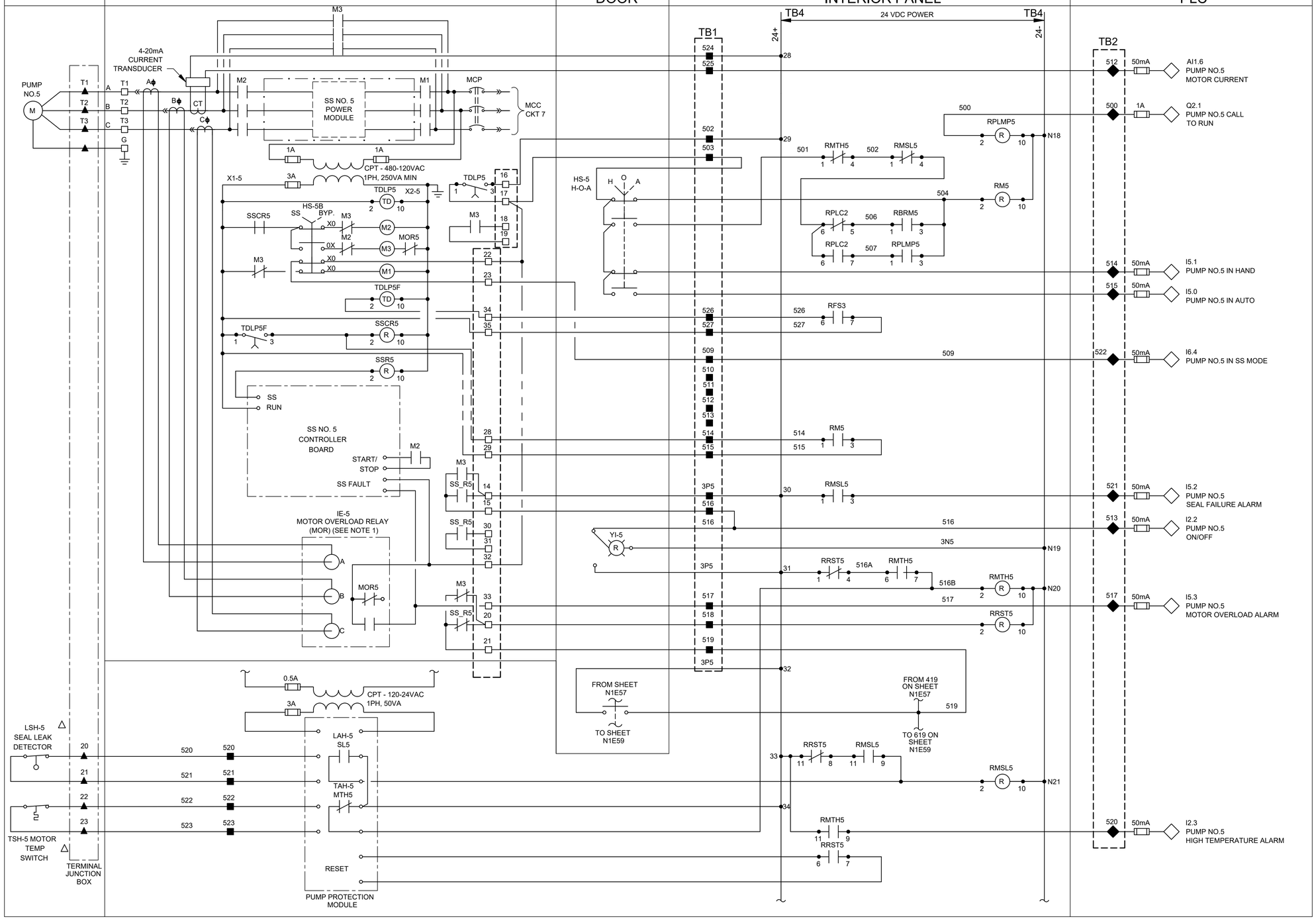

NOTES:

1. MOTOR OVERLOAD RELAY OUTPUT CONTACT SHOWN NORMALLY CLOSED WHEN RELAY IS DE-ENERGIZED, OPEN WHEN ENERGIZED, AND CLOSED WHEN IN ALARM. VERIFY OPERATION OF RELAY PROVIDED AND ADJUST CONNECTION OF RMOR AUXILIARY RELAYS.
2. FUSED TERMINAL ON TERMINAL BLOCK TB4 SEE CONTROL POWER AND COMMUNICATION WIRING DIAGRAM DRAWING NO. N1E48.
3. ALL FLOAT CONTROL CIRCUIT WIRES COLOR SHALL BE YELLOW.

LEGEND

- △ DEVICE OR FIELD TERMINAL LOCATED AT MOTOR
- ✳ DEVICE OR FIELD TERMINAL LOCATED REMOTE
- □ DEVICE OR FIELD TERMINAL LOCATED AT MCC/POWER PANEL
- ■ FIELD TERMINAL LOCATED AT CONTROL PANEL
- ▲ REMOTE TERMINAL
- ● DEVICE TERMINAL NO.
- ◆ PLC INTERFACE TERMINAL

NO.	DATE	REVISION	APP.

HATCH
750 TOWN & COUNTRY BLVD
SUITE 650
HOUSTON, TX 77024
P: 832-930-7670
TX FIRM NUMBER: F-314

SURVEYED BY:
AMANI ENGINEERING, INC.
FB NO. P-6357

STATE OF TEXAS
GUY N SEVERN
105809
LICENSED PROFESSIONAL ENGINEER
7/21/2026

CITY OF HOUSTON
HOUSTON PUBLIC WORKS

LIFT STATION RENEWAL & REPLACEMENT PROJECT
BISSONNET #4 LS

PUMP NO.5 CONTROL WIRING DIAGRAM

WBS NUMBER	FOR CITY OF HOUSTON USE ONLY
R-000267-0173-4	HOUSTON PUBLIC WORKS ACCEPTED AND FILED 82825 CITY DRAWING NUMBER Approval Date 08/14/26 HOUSTON TX
DRAWING SCALE	
AS NOTED	
CITY OF HOUSTON PM	
NUPUR KRISHNAN P.E. N.K.	
SHEET NO. 131 OF 274	

N1E58

PLOTTED: 8/11/2026 10:21 AM
PLOT STYLE: COH.ctb
FILE PATH: \\wusppplot01\d$\Global ProjectWise Plotting - WUS\Queue 1\queue1.dwg

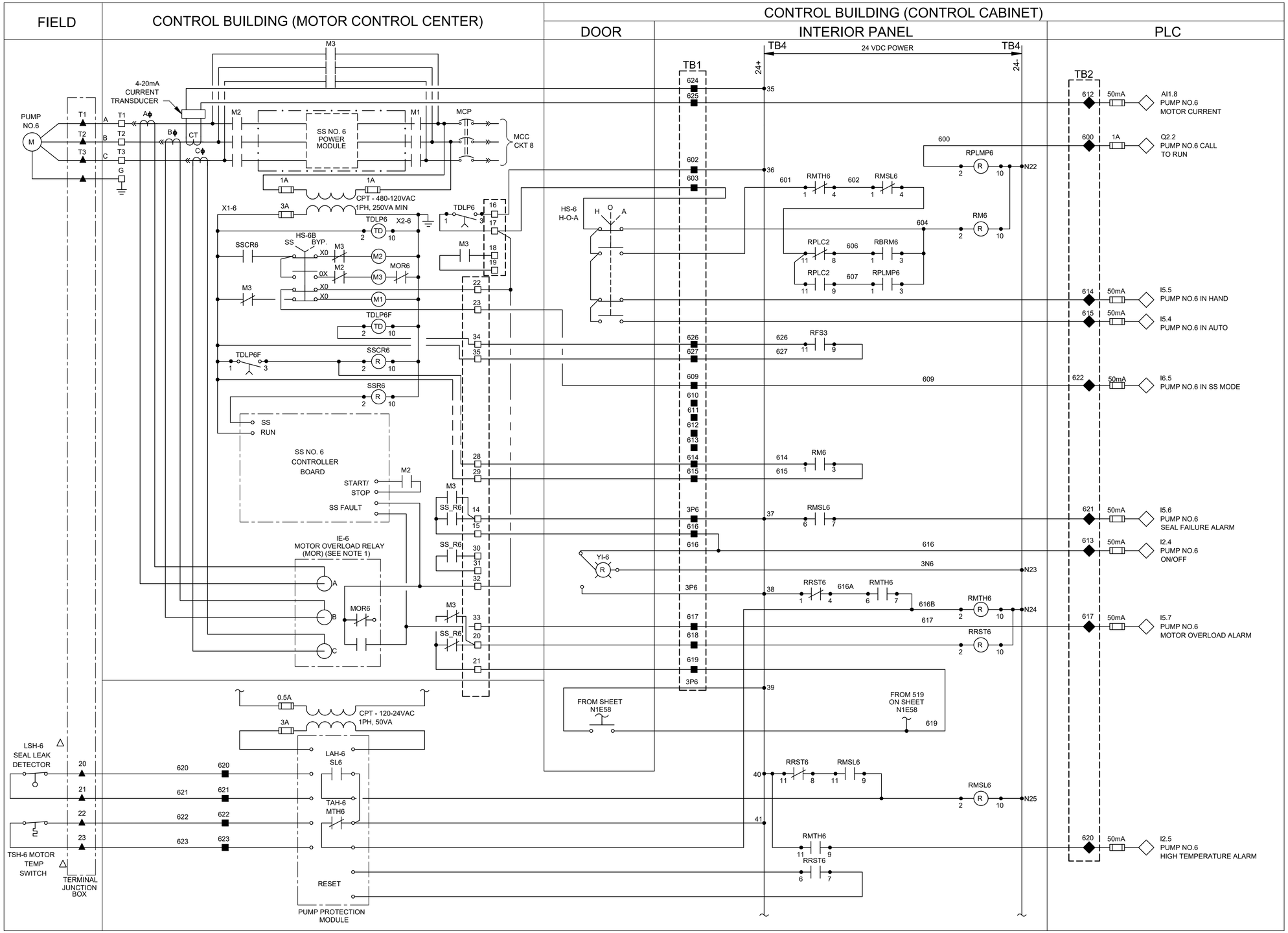

NOTES:

1. MOTOR OVERLOAD RELAY OUTPUT CONTACT SHOWN NORMALLY CLOSED WHEN RELAY IS DE-ENERGIZED, OPEN WHEN ENERGIZED, AND CLOSED WHEN IN ALARM. VERIFY OPERATION OF RELAY PROVIDED AND ADJUST CONNECTION OF RMOR AUXILIARY RELAYS.
2. FUSED TERMINAL ON TERMINAL BLOCK TB4 SEE CONTROL POWER AND COMMUNICATION WIRING DIAGRAM DRAWING NO. N1E48.
3. ALL FLOAT CONTROL CIRCUIT WIRES COLOR SHALL BE YELLOW.

LEGEND

- △ DEVICE OR FIELD TERMINAL LOCATED AT MOTOR
- ✳ DEVICE OR FIELD TERMINAL LOCATED REMOTE
- □ DEVICE OR FIELD TERMINAL LOCATED AT MCC/POWER PANEL
- ■ FIELD TERMINAL LOCATED AT CONTROL PANEL
- ▲ REMOTE TERMINAL
- ● DEVICE TERMINAL NO.
- ◆ PLC INTERFACE TERMINAL

NO.	DATE	REVISION	APP.

HATCH
750 TOWN & COUNTRY BLVD
SUITE 650
HOUSTON, TX 77024
P: 832-930-7670
TX FIRM NUMBER: F-314

SURVEYED BY:
AMANI ENGINEERING, INC.
FB NO. P-6357

STATE OF TEXAS
GUY N SEVERN
105809
LICENSED PROFESSIONAL ENGINEER
7/21/2026

CITY OF HOUSTON
HOUSTON PUBLIC WORKS

LIFT STATION RENEWAL & REPLACEMENT PROJECT
BISSONNET #4 LS

PUMP NO.6 CONTROL WIRING DIAGRAM

WBS NUMBER	FOR CITY OF HOUSTON USE ONLY
R-000267-0173-4	HOUSTON PUBLIC WORKS ACCEPTED AND FILED 82825 CITY DRAWING NUMBER Approval Date 08/14/26 HOUSTON TX
DRAWING SCALE	
AS NOTED	
CITY OF HOUSTON PM	
NUPUR KRISHNAN P.E. N.K.	
SHEET NO. 132 OF 274	

N1E59

PLOTTED: 8/11/2026 10:21 AM
PLOT STYLE: COH.ctb
FILE PATH: \\wusppplot01\d$\Global ProjectWise Plotting - WUS\Queue 2\queue2.dwg

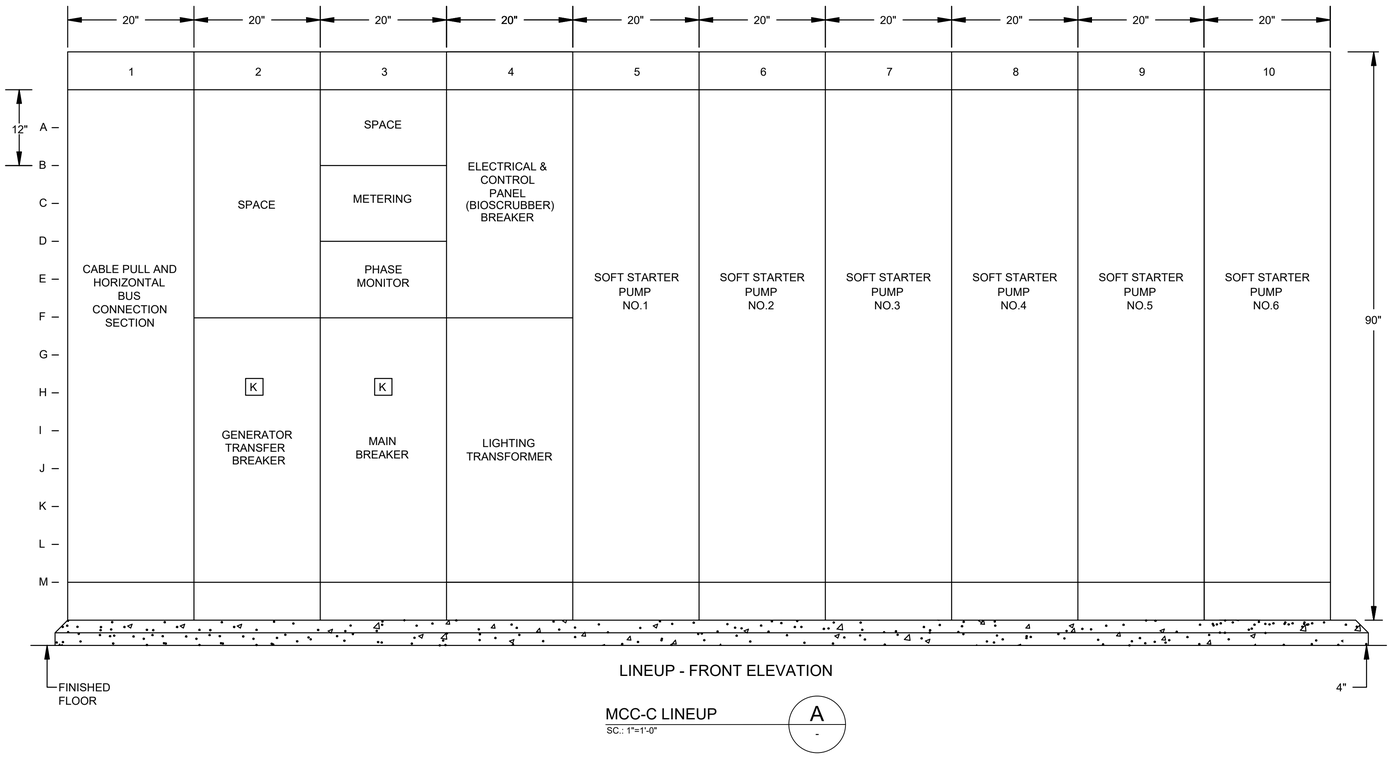

LINEUP - FRONT ELEVATION

MCC-C LINEUP

SC.: 1"=1'-0"

A

-

NO.	DATE	REVISION	APP.

HATCH
750 TOWN & COUNTRY BLVD
SUITE 650
HOUSTON, TX 77024
P: 832-930-7670
TX FIRM NUMBER: F-314

SURVEYED BY:
AMANI ENGINEERING, INC.
FB NO. P-6357

STATE OF TEXAS
GUY N SEVERN
105809
LICENSED PROFESSIONAL ENGINEER
7/21/2026

CITY OF HOUSTON

HOUSTON PUBLIC WORKS

LIFT STATION RENEWAL & REPLACEMENT PROJECT

BISSONNET #4 LS

MCC ELEVATION

WBS NUMBER
R-000267-0173-4
DRAWING SCALE
AS NOTED
CITY OF HOUSTON PM
NUPUR KRISHNAN P.E. N.K.
SHEET NO. 133 OF 274

FOR CITY OF HOUSTON USE ONLY

HOUSTON PUBLIC WORKS
ACCEPTED AND FILED
82825
CITY DRAWING NUMBER
Approval Date 08/14/26
HOUSTON TX

N1E60

PLOTTED: 8/11/2026 10:18 AM

PLOT STYLE: COH.ctb

FILE PATH: \\wusppplot01\d$\Global ProjectWise Plotting - WUS\Queue 3\queue3.dwg

	DESCRIPTION	SERVICE			ROUTING		WIRE SIZE & CONDUIT SIZE
		VOLTAGE	AMPS OR HP	FROM	TO	VIA	
100	SERVICE ENTRANCE	--	--	UTILITY POWER SERVICE	CT CAN/METER DISCONNECT	DUCT BANK	
100A	SERVICE POWER (PHASE# 1)	480V	1600A	SERVICE DISCONNECT	MAIN BREAKER IN MCC	DUCT BANK/RIGID CONDUIT	5#500 kCMIL, 4"C
100B	SERVICE POWER (PHASE# 2)	480V	1600A	SERVICE DISCONNECT	MAIN BREAKER IN MCC	DUCT BANK/RIGID CONDUIT	5#500 kCMIL, 4"C
100C	SERVICE POWER (PHASE# 3)	480V	1600A	SERVICE DISCONNECT	MAIN BREAKER IN MCC	DUCT BANK/RIGID CONDUIT	5#500 kCMIL, 4"C
100D	SERVICE POWER (GROUND)	480V	1600A	SERVICE DISCONNECT	GROUNDING IN MCC	DUCT BANK/RIGID CONDUIT	5#500 kCMIL, 4"C
100E	EMERGENCY POWER (PHASE# 1)	480V	1600A	GENERATOR DISCONNECT	GENERATOR TRANSFER BREAKER IN MCC	DUCT BANK/RIGID CONDUIT	5#500 kCMIL, 4"C
100F	EMERGENCY POWER (PHASE# 2)	480V	1600A	GENERATOR DISCONNECT	GENERATOR TRANSFER BREAKER IN MCC	DUCT BANK/RIGID CONDUIT	5#500 kCMIL, 4"C
100G	EMERGENCY POWER (PHASE# 3)	480V	1600A	GENERATOR DISCONNECT	GENERATOR TRANSFER BREAKER IN MCC	DUCT BANK/RIGID CONDUIT	5#500 kCMIL, 4"C
100H	EMERGENCY POWER (GROUND)			GENERATOR DISCONNECT	GENERATOR TRANSFER BREAKER IN MCC	DUCT BANK/RIGID CONDUIT	5#500 kCMIL, 4"C
101	GROUND ELECTRODE CONDUCTOR	--	--	MCC	GROUND FIELD	--	1#6G
102	EXOTHERMIC WELD BUILDING GROUND CONDUCTOR			CONTROL BUILDING	GROUND FIELD	--	1#6G
103	BUILDING GROUND CONDUCTOR	--	--	BUILDING FOOTER REBAR	GROUND ROD	DUCT BANK	1#6G
104	GROUND ELECTRODE CONDUCTOR	--	--	CONTROL CABINET	GROUND FIELD	--	1#6G
105	COMMUNICATION ANTENNA	--	--	PPU-AC	LIGHT & COMMUNICATION POLE	RIGID CONDUIT/DUCT BANK	ETHERNET CABLE, 1/2"C / 2"C.
105A	POLE LIGHT	120V	--	POLE LIGHT SWITCH (INSIDE CONTROL BUILDING)	LIGHT & COMMUNICATION POLE	RIGID CONDUIT/DUCT BANK	2#12 / 1#12G (POLE LIGHT SWITCH), 1/2"C / 2"C.
200	PUMP NO. 1 POWER	480V	215 HP	PUMP NO. 1	PUMP NO. 1 JUNCTION BOX	RIGID CONDUIT	MFR CABLE, 2-1/2"C (SEE NOTE 2)
201	PUMP NO. 1 CONTROLS	120V	--	PUMP NO. 1	PUMP NO. 1 JUNCTION BOX	RIGID CONDUIT	INCL MFR CABLE, 2-1/2"C (SEE NOTE 2)
202	PUMP NO. 1 POWER	480V	215 HP	PUMP NO. 1 JUNCTION BOX	SOFT STARTER PUMP NO.1 (MCC)	DUCT BANK/RIGID CONDUIT	6#250/kCMIL / 1#6AWG G, 4"C
203	COMBINED PUMP CONTROLS	120V	--	PUMP NO. 1 JUNCTION BOX	CONTROL CABINET	DUCT BANK/RIGID CONDUIT	(COMBINE 201 & 301) 8#14, 2"C / 1"C
205	PUMP NO. 1 CONTROLS	120V	--	STARTER IN MOTOR CONTROL CENTER	CONTROL CABINET	DUCT BANK	10C#14 / 1P+S#16 AWG, 1"C
206	PUMP NO. 1 CAPACITOR	480V	TBD	PUMP NO. 1 MOTOR STARTER	POWER FACTOR CORRECTION CAPACITOR	RIGID CONDUIT	6#250/kCMIL / 1#6AWG G, 4"C
300	PUMP NO. 2 POWER	480V	215 HP	PUMP NO. 2	PUMP NO. 2 JUNCTION BOX	RIGID CONDUIT	MFR CABLE, 2-1/2"C (SEE NOTE 2)
301	PUMP NO. 2 CONTROLS	120V	--	PUMP NO. 2	PUMP NO. 2 JUNCTION BOX	RIGID CONDUIT	INCL MFR CABLE, 2-1/2"C (SEE NOTE 2)
302	PUMP NO. 2 POWER	480V	215 HP	PUMP NO. 2 JUNCTION BOX	SOFT STARTER PUMP NO.2 (MCC)	DUCT BANK/RIGID CONDUIT	6#250/kCMIL / 1#6AWG G, 4"C
305	PUMP NO. 2 CONTROLS	120V	--	STARTER IN MOTOR CONTROL CENTER	CONTROL CABINET	DUCT BANK	10C#14 / 1P+S#16 AWG, 1"C
306	PUMP NO. 2 CAPACITOR	480V	TBD	PUMP NO. 2 MOTOR STARTER	POWER FACTOR CORRECTION CAPACITOR	RIGID CONDUIT	6#250/kCMIL / 1#6AWG G, 4"C
400	PUMP NO. 3 POWER	480V	215 HP	PUMP NO. 3	PUMP NO. 3 JUNCTION BOX	RIGID CONDUIT	MFR CABLE, 2-1/2"C (SEE NOTE 2)
401	PUMP NO. 3 CONTROLS	120V	--	PUMP NO. 3	PUMP NO. 3 JUNCTION BOX	RIGID CONDUIT	INCL MFR CABLE, 2-1/2"C (SEE NOTE 2)
402	PUMP NO. 3 POWER	480V	215 HP	PUMP NO. 3 JUNCTION BOX	SOFT STARTER PUMP NO.3 (MCC)	DUCT BANK	6#250/kCMIL / 1#6AWG G, 4"C
403	COMBINED PUMP CONTROLS	120V	215 HP	PUMP NO. 3 JUNCTION BOX	CONTROL CABINET	DUCT BANK/RIGID CONDUIT	(COMBINE 401 & 501) 8#14, 2"C / 1"C
405	PUMP NO. 3 CONTROLS	120V	--	STARTER IN MOTOR CONTROL CENTER	CONTROL CABINET	DUCT BANK	10C#14 / 1P+S#16 AWG, 1"C
406	PUMP NO. 3 CAPACITOR	480V	TBD	PUMP NO. 3 MOTOR STARTER	POWER FACTOR CORRECTION CAPACITOR	RIGID CONDUIT	6#250/kCMIL / 1#6AWG G, 4"C
500	PUMP NO. 4 POWER	480V	215 HP	PUMP NO. 4	PUMP NO. 4 JUNCTION BOX	RIGID CONDUIT	MFR CABLE, 2-1/2"C (SEE NOTE 2)
501	PUMP NO. 4 CONTROLS	120V	--	PUMP NO. 4	PUMP NO. 4 JUNCTION BOX	RIGID CONDUIT	INCL MFR CABLE, 2-1/2"C (SEE NOTE 2)
502	PUMP NO. 4 POWER	480V	--	PUMP NO. 4 JUNCTION BOX	SOFT STARTER PUMP NO.4 (MCC)	DUCT BANK/RIGID CONDUIT	6#250/kCMIL / 1#6AWG G, 4"C
505	PUMP NO. 4 CONTROLS	120V	--	STARTER IN MOTOR CONTROL CENTER	CONTROL CABINET	DUCT BANK	10C#14 / 1P+S#16 AWG, 1"C
506	PUMP NO. 4 CAPACITOR	480V	TBD	PUMP NO. 4 MOTOR STARTER	POWER FACTOR CORRECTION CAPACITOR	RIGID CONDUIT	6#250/kCMIL / 1#6AWG G, 4"C
600	LIGHTING PANEL FEEDER	480V	--	MOTOR CONTROL CENTER	LIGHTING TRANSFORMER	RIGID CONDUIT	3#10AWG / 1#10AWG G, 1"C
601	LIGHTING PANEL GROUND	--	--	LIGHTING PANEL	GROUND FIELD	--	1#6G
602	LIGHTING PANEL FEEDER	120/240V	--	LIGHTING TRANSFORMER	LIGHTING PANEL	RIGID CONDUIT	3#10AWG / 1#10AWG G, 1"C
603	LIGHTING TRANSFORMER GROUND	--	--	LIGHTING TRANSFORMER	GROUND FIELD	--	1#6G
604	ELECTRICAL & CONTROL PANEL (BIOSCRUBER) GROUND	--	--	ELECTRICAL & CONTROL PANEL (BIOSCRUBER)	GROUND FIELD	--	1#6G
700	PUMP NO. 5 POWER	480V	90 HP	PUMP NO. 5	PUMP NO. 5 JUNCTION BOX	RIGID CONDUIT	MFR CABLE, 2-1/2"C (SEE NOTE 2)
701	PUMP NO. 5 CONTROLS	120V	--	PUMP NO. 5	PUMP NO. 5 JUNCTION BOX	RIGID CONDUIT	INCL MFR CABLE, 2-1/2"C (SEE NOTE 2)
702	PUMP NO. 5 POWER	480V	90 HP	PUMP NO. 5 JUNCTION BOX	SOFT STARTER PUMP NO.5 (MCC)	DUCT BANK/RIGID CONDUIT	3#4/0 / 1# 4/0 G, 2-1/2"C
703	COMBINED PUMP CONTROLS	120V	--	PUMP NO. 5 JUNCTION BOX	CONTROL CABINET	DUCT BANK/RIGID CONDUIT	(COMBINE 701 & 801) 8#14, 2"C / 1"C
705	PUMP NO. 5 CONTROLS	120V	--	STARTER IN MOTOR CONTROL CENTER	CONTROL CABINET	DUCT BANK	10C#14 / 1P+S#16 AWG, 1"C
706	PUMP NO. 5 CAPACITOR	480V	TBD	PUMP NO. 5 MOTOR STARTER	POWER FACTOR CORRECTION CAPACITOR	RIGID CONDUIT	3#4/0 / 1# 4/0 G, 2-1/2"C
800	PUMP NO. 6 POWER	480V	90 HP	PUMP NO. 6	PUMP NO. 6 JUNCTION BOX	RIGID CONDUIT	MFR CABLE, 2-1/2"C (SEE NOTE 2)
801	PUMP NO. 6 CONTROLS	120V	--	PUMP NO. 6 JUNCTION BOX	PUMP STARTER	RIGID CONDUIT	INCL MFR CABLE, 2-1/2"C (SEE NOTE 2)
802	PUMP NO. 6 POWER	480V	90 HP	PUMP NO. 6 JUNCTION BOX	SOFT STARTER PUMP NO.6 (MCC)	DUCT BANK/RIGID CONDUIT	3#4/0 / 1# 4/0 G, 2-1/2"C
805	PUMP NO. 6 CONTROLS	120V	--	STARTER IN MOTOR CONTROL CENTER	CONTROL CABINET	DUCT BANK	10C#14 / 1P+S#16 AWG, 1"C
806	PUMP NO. 6 CAPACITOR	480V	TBD	PUMP NO. 6 MOTOR STARTER	POWER FACTOR CORRECTION CAPACITOR	RIGID CONDUIT	3#4/0 / 1# 4/0 G, 2-1/2"C
900	INTRUSION ALARM	24VDC	--	MOTION SWITCH	CONTROL CABINET	RIGID CONDUIT	2#14, 1/2"C
1000	LEVEL TRANSMITTER	24VDC	--	LEVEL TRANSMITTER LT-1	TRANSMITTER JUNCTION BOX	RIGID CONDUIT	INCL IN MFR CABLE, 2-1/2"C (SEE NOTE 2)
1001	LEVEL TRANSMITTER	24VDC	--	LEVEL TRANSMITTER LT-2	TRANSMITTER JUNCTION BOX	RIGID CONDUIT	INCL IN MFR CABLE, 2-1/2"C (SEE NOTE 2)
1002	COMBINED LEVEL TRANSMITTERS & FLOAT SWITCH	24VDC	--	TRANSMITTER JUNCTION BOX	CONTROL CABINET	DUCT BANK/RIGID CONDUIT	COMBINE 1000/1001/1003, 4#14+2#14G / 4#14, 2"C / 1"C
1003	WELL FLOAT SWITCHES	24VDC	--	FLOAT SWITCH NO.1 & NO.2	TRANSMITTER JUNCTION BOX	RIGID CONDUIT	MFR CABLE, 2-1/2"C (SEE NOTE 2)
1100	120VAC FOR RECEPTACLE	120V	--	LIGHTING PANEL	RECEPTACLE NEXT TO TRANSMITTER J-BOX	DUCT BANK/RIGID CONDUIT	L11, 2#12 / 1#12G, 2"C / 3/4"C
1101	120VAC FOR ELECTRICAL & CONTROL PANEL (BIOSCRUBBER)	120V	--	LIGHTING PANEL	POWER JUNCTION BOX (BIOSCRUBBER)	RIGID CONDUIT/DUCT BANK	L12, 2#12 / 1#12G, 1/2"C / 2"C
1102	480V FOR ELECTRICAL & CONTROL PANEL (BIOSCRUBBER)	480V	--	ECP BREAKER IN MCC	POWER JUNCTION BOX (BIOSCRUBBER)	RIGID CONDUIT/DUCT BANK	3#8, 1"C / 2"C
1103	NETWORK CABLE - SIGNAL MONITORING (BIOSCRUBBER)	--	--	CONTROL JUNCTION BOX (BIOSCRUBBER)	ELECTRICAL & CONTROL PANEL (BIOSCRUBBER)	RIGID CONDUIT	ETHERNET CABLE, 1/2"C
1104	NETWORK CABLE - SIGNAL MONITORING (BIOSCRUBBER)	--	--	CONTROL CABINET	CONTROL JUNCTION BOX (BIOSCRUBBER)	RIGID CONDUIT/DUCT BANK	ETHERNET CABLE, 1/2"C / 2"C
1105	ELECTRICAL PLATFORM LIGHT	120V	--	LIGHTING PANEL	LIGHT SWITCH (ELECTRICAL PLATFORM LIGHT)	RIGID CONDUIT/DUCT BANK/RIGID CONDUIT	L13, 2#12 / 1#12G, 1/2"C / 2"C / 1-1/2"C
1106	BIOSCRUBBER PLATFORM LIGHT	120V	--	LIGHTING PANEL	LIGHT SWITCH (BIOSCRUBBER PLATFORM LIGHT)	RIGID CONDUIT/DUCT BANK/RIGID CONDUIT	L14, 2#12 / 1#12G, 2"C / 1-1/2"C
1107	ELECTRICAL & CONTROL PANEL 120V (BIOSCRUBBER)	120V	--	CONTROL JUNCTION BOX (BIOSCRUBBER)	ELECTRICAL & CONTROL PANEL (BIOSCRUBBER)	RIGID CONDUIT	L12, 2#12 / 1#12G, 1/2"C
1108	ELECTRICAL & CONTROL PANEL 480V (BIOSCRUBBER)	480V	--	POWER JUNCTION BOX (BIOSCRUBBER)	ELECTRICAL & CONTROL PANEL (BIOSCRUBBER)	RIGID CONDUIT	3#8, 1"C

NOTES:

1. CONDUITS LABELED "FUTURE SPACE" ARE TO BE INSTALLED AND CAPPED IN FIELD.
2. ANY CONDUIT REQUIRING A CSBE SEAL, SHALL BE A MINIMUM SIZE OF 2 1/2".
3. ALL UNDERGROUND CONDUITS (SINGLE AND MULTI-RUN) SHALL BE MINIMUM 2 INCHES AND SHALL BE ENCASED IN REINFORCED CONCRETE DUCTBANK.

NO.	DATE	REVISION	APP.

HATCH
750 TOWN & COUNTRY BLVD
SUITE 650
HOUSTON, TX 77024
P: 832-930-7670
TX FIRM NUMBER: F-314

SURVEYED BY:
AMANI ENGINEERING, INC.
FB NO. P-6357

STATE OF TEXAS
GUY N SEVERN
105809
LICENSED
PROFESSIONAL ENGINEER
7/21/2026

CITY OF HOUSTON
HOUSTON PUBLIC WORKS

LIFT STATION RENEWAL & REPLACEMENT PROJECT
BISSONNET #4 LS

ELECTRICAL CONDUIT SCHEDULE

WBS NUMBER	FOR CITY OF HOUSTON USE ONLY
R-000267-0173-4	HOUSTON PUBLIC WORKS ACCEPTED AND FILED
DRAWING SCALE	82825 CITY DRAWING NUMBER
AS NOTED	Approval Date 08/14/26 HOUSTON TX
CITY OF HOUSTON PM	
NUPUR KRISHNAN P.E. N.K.	
N1E61	SHEET NO. 134 OF 274

PLOTTED: 8/11/2026 10:14 AM
PLOT STYLE: COH.ctb
FILE PATH: \\wusppplot01\d$\Global ProjectWise Plotting - WUS\Queue 3\queue3.dwg

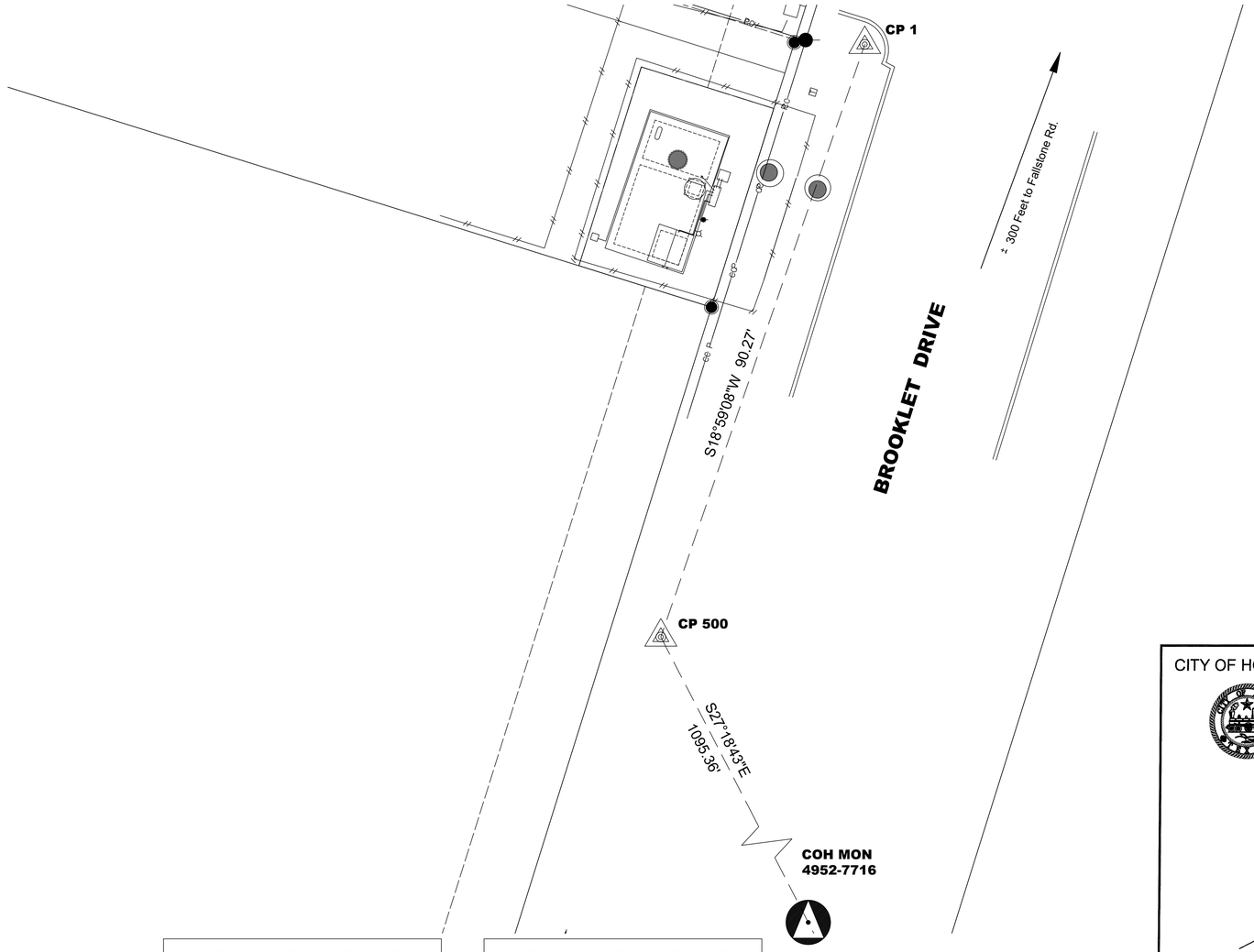

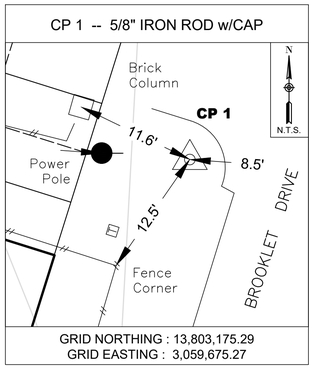

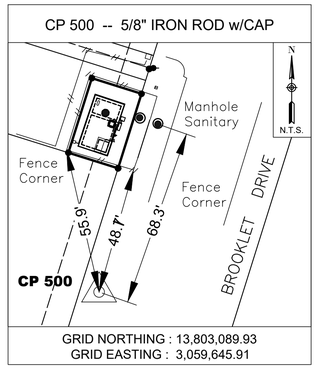

CP No.	Grid Northing	Grid Easting	Elevation	Description
1	13,803,175.29	3,059,675.27	72.36	5/8" IRON ROD w/CAP
500	13,803,089.93	3,059,645.91	72.14	5/8" IRON ROD w/CAP

0 1 2 3 ORIGINAL SCALE IN INCHES FOR REDUCED PLANS

CITY OF HOUSTON

CITY SURVEY 4952-7716
SITE CONTROL MONUMENT
FLOODPLAIN RM#040406

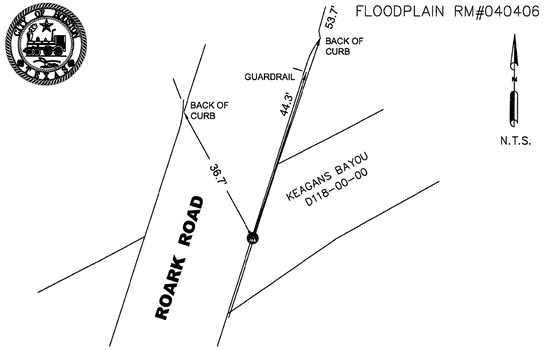

Project WBS# R-000267-0175-3
Texas Coordinate System of 1983, South Central Zone, U. S. Survey Feet
X= 3,060,148.44
Y= 13,802,116.81

Lat.= N 29° 39' 21.6828"
Lon.= W 95° 33' 44.4834"

Keymap Page: 569C
Orthometric Elevation = 75.84
Ellipsoid Height= -13.77
Geoid: GEOID 18
Datum Source & Adjustment:
2-HR STATIC GPS OBSERVATION
MADE ON MONUMENT ON 10/23/2024

Reference Frame Used: NAD_83(2011)(EPOCH: 2010.0000)
Vertical Adjustment used: NAVD 88 GEOID18
General Location: ON THE EASTERLY SIDE OF ROARK RD. APPROXIMATELY 140 FEET SOUTH OF HWAY 59 INTERSECTION.

Date Set: MAY 14, 2003 Type of Mark: BRASS DISK

3 Nearest project control points (bearings and distances stated below):
1. CP #501, 5/8" IRON ROD CAPPED "AMANI", N 43° 18' 08" W, 888.20'
2. CP #500, 5/8" IRON ROD CAPPED "AMANI" , N 27° 18' 43" W, 1095.36'
3. CP #1, 5/8" IRON ROD CAPPED "AMANI" , N 24° 05' 09" W, 1159.56'

NOTE:
1. Bearings are grid bearings.
2. Combined Factor (C.F)= 0.99987955.

Surface= Grid / C.F.

Surveyed By: Amani Engineering, Inc.
11011 Richmond Avenue, Suite 700
Houston, TX 77042
Tel. (713)270-5700
Texas Registered Survey Firm 10028200

STATE OF TEXAS REGISTERED CHRISTINA I. WEAVER 6753 PROFESSIONAL LAND SURVEYOR 2.18.25

P:\Cadd\2024\24013 - Hatch - COH FY20 Lift Stations\Monument\Brooklet LS\4952-7716.dwg

N
10 5 0 10
SCALE IN FEET
22 X 34 : 1" = 10'

NO.	DATE	REVISION	APP.

SURVEY NOTES:

1. ALL BEARINGS AND COORDINATES ARE BASED ON THE TEXAS COORDINATE SYSTEM, SOUTH CENTRAL ZONE (4204) NORTH AMERICAN DATUM OF 1983 (2011 ADJ) 2010 EPOCH, U.S. SURVEY FEET. COORDINATES SHOWN HEREON ARE GRID VALUES AND ALL DISTANCES SHOWN ARE SURFACE VALUES. THE HCFCD PUBLISHED COMBINED SCALE FACTOR IS 0.99988000.
2. GRID COORDINATES/SCALE FACTOR = SURFACE COORDINATES.
3. FIELD DATA COLLECTED OCTOBER 2024.
4. ALL ELEVATIONS SHOWN HEREON ARE REFERENCED TO THE NORTH AMERICAN VERTICAL DATUM OF 1988 (NAVD88) GEOID 18. ALL CONTROL NETWORK ELEVATIONS ARE TIED TO CITY SURVEY 4952-7716 SITE CONTROL MONUMENT USING DIFFERENTIAL LEVELING.
5. THE CONVERSION FACTOR FROM PROJECT LEVELED G18 ELEVATION TO THE HCFCD CALLED G99 ELEVATION = +0.51'.
6. ACCORDING TO FEMA'S FLOOD INSURANCE RATE MAP (FIRM) PANEL NO. 48201C0840L. DATED 06/18/2007, A PORTION OF THE SUBJECT PROPERTY LIES WITHIN ZONE AE, SPECIAL FLOOD HAZARD AREA (SFHA). APPROXIMATE LIMITS (IF SHOWN) ARE BASED ON AVAILABLE SHAPE FILES PROVIDED BY FEMA. THIS FLOOD STATEMENT IS BASED ON ENGINEERING INFORMATION PROVIDED BY FEMA AND SHALL NOT CREATE LIABILITY ON THE PART OF THE SURVEYOR.

PROJECT BENCH MARK:

A BRASS DISK LOCATED ON THE EASTERLY SIDE OF ROARK RD. APPROXIMATELY 140 FEET SOUTH OF HIGHWAY 59 INTERSECTION.
OBSERVED ELEVATION = 75.84' (NAVD 88 GEOID 18)
CALL ELEVATION = 76.35'.

AMANI ENGINEERING, INC.
11011 RICHMOND AVENUE
SUITE 700
HOUSTON, TEXAS 77024
TEL: (713) 270-5700
TBPE REG. NO. F-4528
TBPELS REG. NO. 1028200

HATCH
750 TOWN & COUNTRY BLVD.
SUITE 650
HOUSTON, TEXAS 77024
P:832-930-7670
TX FIRM NUMBER: F-314

SURVEYED BY:
AMANI ENGINEERING,INC.
FB NO. P-6357

STATE OF TEXAS REGISTERED WILLIAM H. REIMER III 4044 PROFESSIONAL LAND SURVEYOR
William H. Reimer III 06-05-2026

CITY OF HOUSTON
HOUSTON PUBLIC WORKS

LIFT STATION RENEWAL & REPLACEMENT PROJECT

BROOKLET LIFT STATION
SURVEY CONTROL MAP

WBS NUMBER
R-000267-0173-4
DRAWING SCALE
1" = 10'
CITY OF HOUSTON PM
NUPUR KRISHNAN P.E. N.K.
SHEET NO. 135 OF 274

FOR CITY OF HOUSTON USE ONLY

HOUSTON PUBLIC WORKS
ACCEPTED AND FILED
82825
CITY DRAWING NUMBER
Approval Date 08/14/26
HOUSTON TX

C1C22

FILE PATH: P:\Cadd\2024\24013 - Hatch - COH FY20 Lift Stations\CAD_DWG\Survey Control Drawings\Control-Brooklet LS.dwg

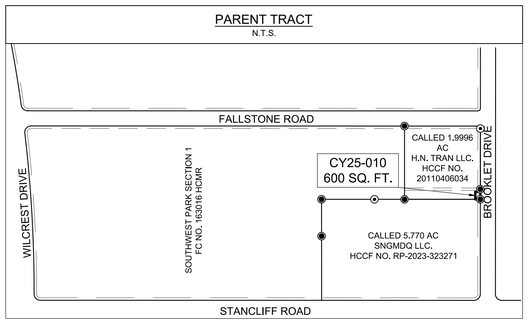

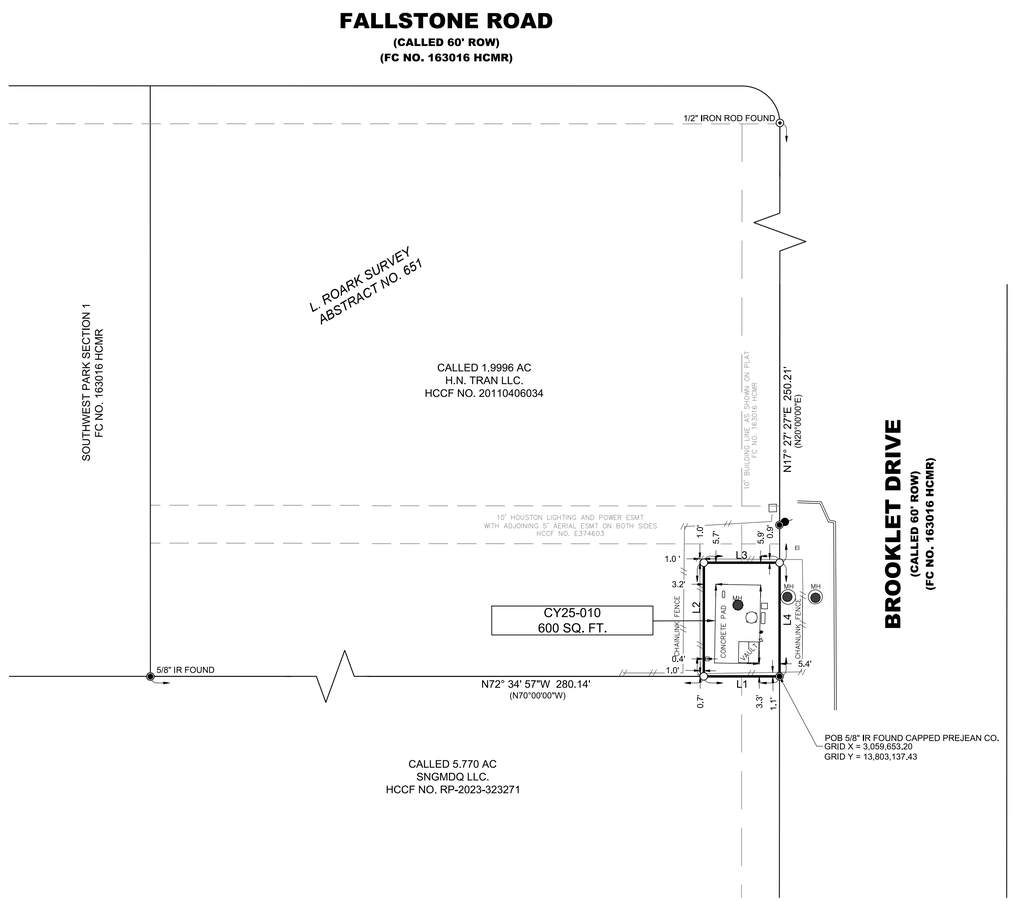

SYMBOL LEGEND
◉ - FOUND 5/8" IRON ROD
⦿ - FOUND 1/2" IRON ROD
⊗ - FOUND 'X' CUT
○ - SET 5/8" IRON ROD CAPPED 'AMANI'

LEGEND

BL	BUILDING LINE
CB	CHORD BEARING
CD	CHORD DISTANCE
ESMT	EASEMENT
FC	FILM CODE
HCCF	HARRIS COUNTY CLERK FILE
HCDR	HARRIS COUNTY DEED RECORDS
HCMR	HARRIS COUNTY MAP RECORDS
MH	MANHOLE
NO	NUMBER
POB	POINT OF BEGINNING
POC	POINT OF COMMENCEMENT
PG	PAGE
ROW	RIGHT OF WAY
SEC	SECTION
VOL	VOLUME
WLE	WATERLINE EASEMENT
( )	RECORD DIMENSION WHEN DIFFERENT THAN SURVEYED

LINE TABLE		
LINE	BEARING	DISTANCE
L1	N72° 34' 57"W (N70°00'00"W)	20.00
L2	N17° 27' 27"E (N20°00'00"E)	30.00
L3	S72° 34' 57"E (S70°00'00"E)	20.00
L4	S17° 27' 27"W (S20°00'00"W)	30.00

REVISION	DATE	APP.

20 10 0 20

SCALE IN FEET
11" X 17" : 1" = 40'
22" X 34" : 1" = 20'

NOTES:

1. ALL BEARINGS AND COORDINATES ARE BASED ON THE TEXAS COORDINATE SYSTEM, SOUTH CENTRAL ZONE (4204) NORTH AMERICAN DATUM OF 1983 (2011 ADJ) 2010 EPOCH. COORDINATES SHOWN HEREON ARE GRID VALUES AND ALL DISTANCES SHOWN ARE SURFACE VALUES.THE COMBINED SCALE FACTOR IS 0.99988000
2. GRID COORDINATES/SCALE FACTOR = SURFACE COORDINATES.
3. HORIZONTAL COORDINATES BASED ON GPS FIELD DATA COLLECTED OCTOBER, 2024.
4. THIS SURVEY PLAT IS ACCOMPANIED BY A LEGAL DESCRIPTION OF EVEN DATE.
5. THE SURVEYOR HAS NOT ABSTRACTED THE SUBJECT PROPERTY. ABSTRACT CERTIFICATES WERE PROVIDED BY ABSTRACT SERVICES OF HOUSTON, GF NO. 7910-25-1906 DATED MARCH 24, 2025.
6. SURVEY WAS PREPARED WITHOUT BENEFIT OF CURRENT TITLE COMMITMENT AND MAY NOT SHOW ALL ENCUMBRANCES ON SITE. NO LAND TITLE COMMITMENT OR REPORT WAS PROVIDED BY THE CLIENT.
7. SUBJECT TRACT MAY BE SUBJECT TO THE FOLLOWING EASEMENTS AND RESTRICTIONS :
   a. SUBJECT TO RESTRICTIVE COVENANTS AS SET FORTH IN A PLAT, RECORDED IN VOLUME 163, PAGE 16 OF THE MAP RECORDS OF HARRIS COUNTY, TEXAS AND UNDER COUNTY CLERK'S FILE NO. C987299, RP-2019-191121 AND RP-2019-205775.
   b. LIFT STATION SITE AS SHOWN ON THE PLAT, RECORDED IN VOLUME 163, PAGE 16 OF THE MAP RECORDS OF HARRIS COUNTY, TEXAS.

THIS SURVEY SUBSTANTIALLY COMPLIES WITH THE CURRENT TEXAS SOCIETY OF PROFESSIONAL SURVEYORS MANUAL OF PRACTICE REQUIREMENTS FOR A CATEGORY 1A, CONDITION 2 LAND TITLE SURVEY.

THE FIELD WORK WAS COMPLETED DEC 2023.

WILLIAM H. REIMER III
REGISTERED PROFESSIONAL LAND SURVEYOR NO. 4044
AMANI ENGINEERING, INC.
11011 RICHMOND AVE, SUITE 700
HOUSTON, TEXAS 77042
TEL 713.270.5700
TEXAS REGISTERED SURVEYING FIRM 10028200

STATE OF TEXAS REGISTERED WILLIAM H. REIMER III 4044 PROFESSIONAL LAND SURVEYOR
04-15-2025

AMANI ENGINEERING, INC.
11011 RICHMOND AVENUE, SUITE 700
HOUSTON, TEXAS 77042
TEL: (713) 270-5700
Texas Registered Engineering Firm No. F-4528
Texas Registered Surveying Firm No.100282-00

LAND TITLE SURVEY OF CALLED 600 SQUARE FOOT EASEMENT, HCCF D050657, OUT OF BLOCK 1 SOUTHWEST PARK SECTION 1, FC NO. 163016 HCMR, SITUATED IN THE LEO ROARK SURVEY, A-651, HARRIS COUNTY, TEXAS

PARCEL CY25-010
BROOKLET LIFT STATION

HOUSTON PUBLIC WORKS

APPROVAL

DATE

SURVEY SECTION

RIGHT OF WAY SECTION

KEY MAP No. 529-Y	FACET MAP No. 4953c
PARCEL NO. CY25-010	
1" = 20'	
SHEET 3 OF 3	
JOB NO.	
WBS NO. R-000267-0173-3	
ILMS NO.	

HOUSTON PUBLIC WORKS
ACCEPTED AND FILED
82825
CITY DRAWING NUMBER
Approval Date 08/14/26
HOUSTON TX

FILE PATH: P:\Cadd\2024\24013 - Hatch - COH FY20 Lift Stations\CAD_DWG\Boundary\Brookiet\24013-BrookietBoundary.dwg

PLOTTED: 5/14/2026 7:20 AM
PLOT STYLE: ----
FILE PATH: \\wusopplot01\d$\Global ProjectWise Plotting - WUS\Queue 4\queue4.dwg

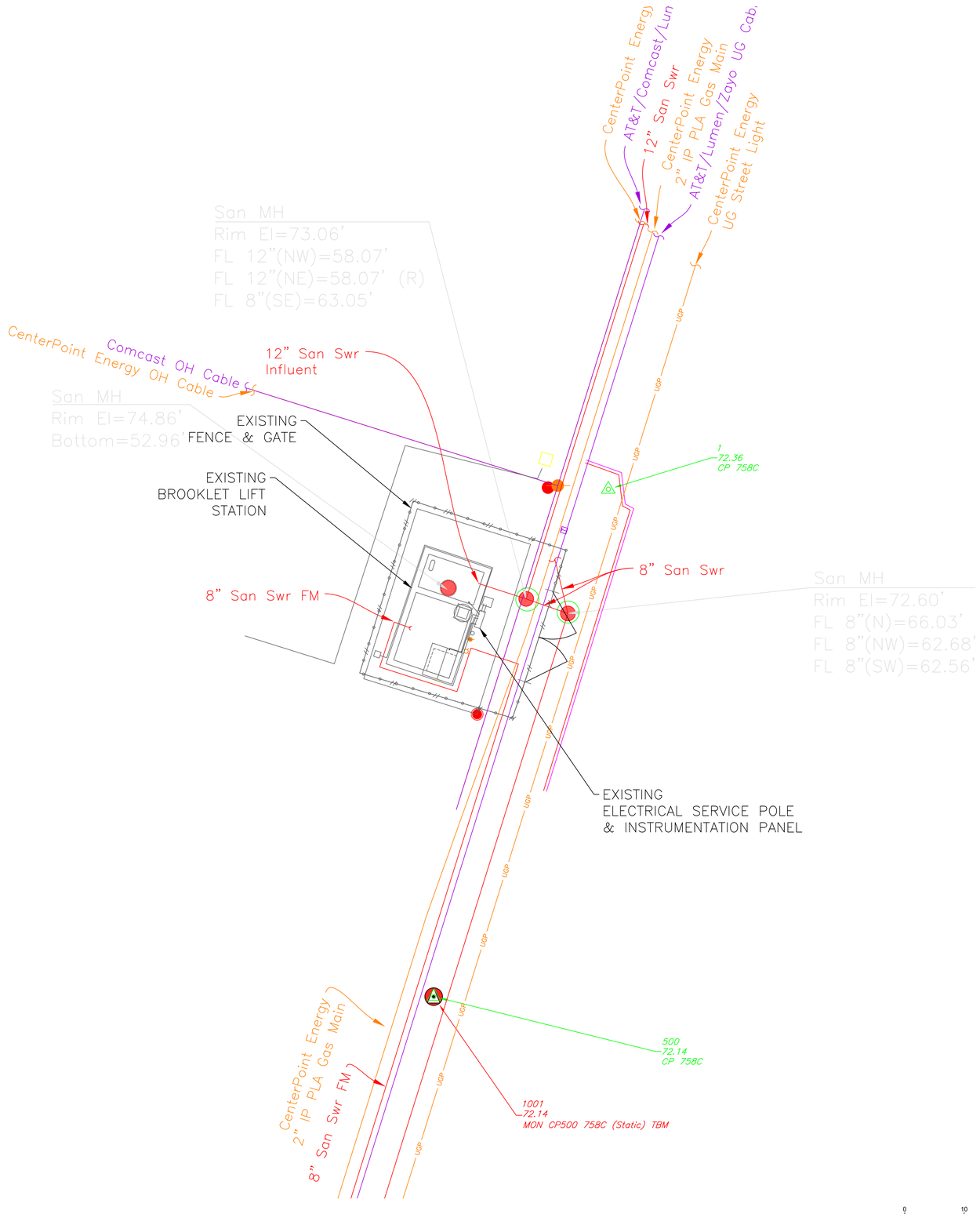

NOTE:

1. LS SITE IS LOCATED IN THE 100 YEAR FLOODPLAIN

NO.	DATE	REVISION	APP.

HATCH
750 TOWN & COUNTRY BLVD
SUITE 650
HOUSTON, TX 77024
P: 832-930-7670
TX FIRM NUMBER: F-314

SURVEYED BY:
AMANI ENGINEERING, INC.
FB NO. P-6357

STATE OF TEXAS
MARK G. SCALLY
136279
LICENSED
PROFESSIONAL ENGINEER
5/14/26

CITY OF HOUSTON
HOUSTON PUBLIC WORKS

LIFT STATION RENEWAL & REPLACEMENT PROJECT
BROOKLET LS
EXISTING CIVIL TOPOGRAPHIC PLAN

WBS NUMBER
R-000267-0173-4
DRAWING SCALE
AS NOTED
CITY OF HOUSTON PM
NUPUR KRISHNAN P.E. N.K.
SHEET NO. 137 OF 274

FOR CITY OF HOUSTON USE ONLY

HOUSTON PUBLIC WORKS
ACCEPTED AND FILED
82825
CITY DRAWING NUMBER
Approval Date 08/14/26
HOUSTON TX

C1C24

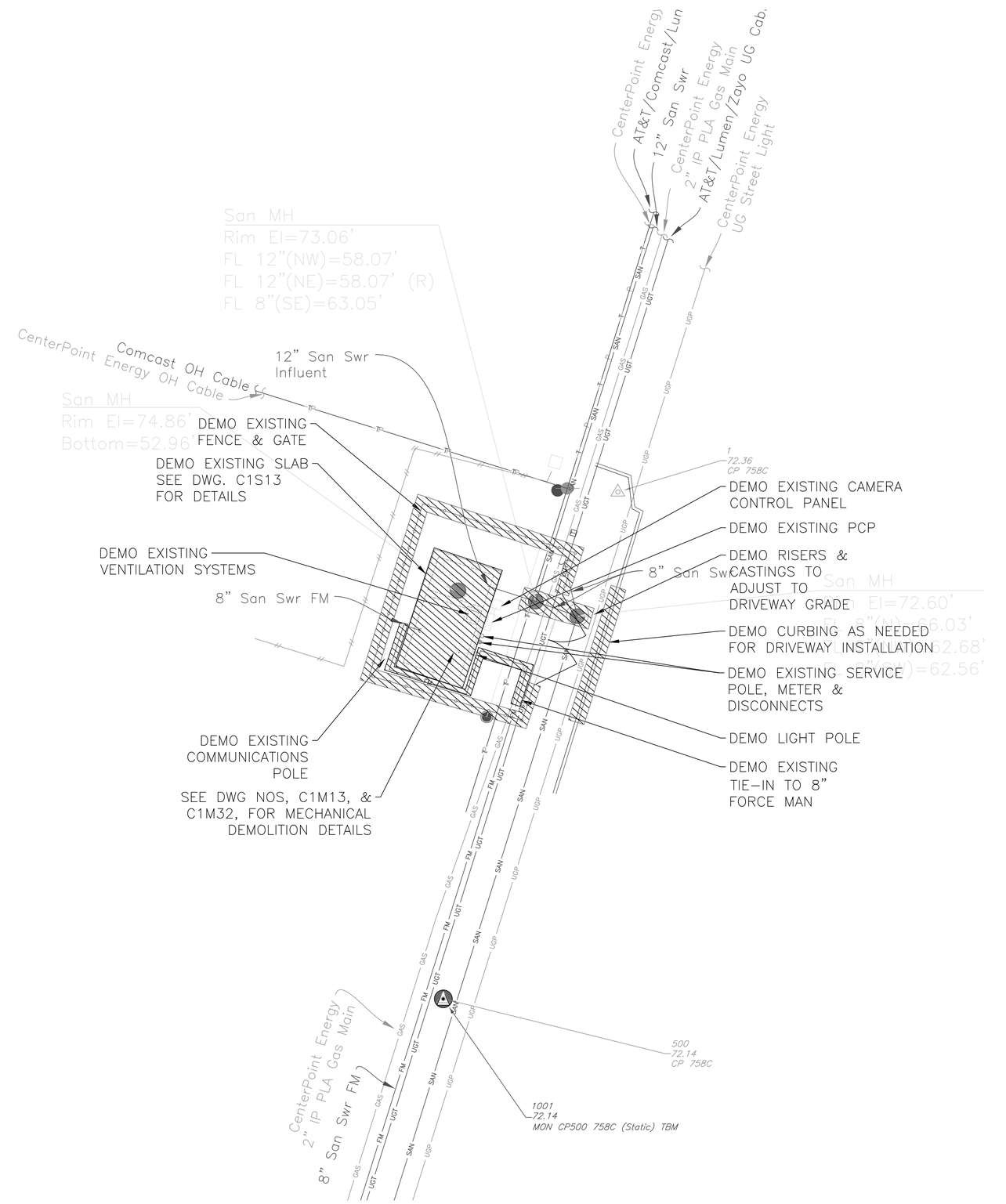

NO.	DATE	REVISION	APP.

NOTE: THE CITY SHALL HAVE THE FIRST RIGHT OF REFUSAL TO RETAIN OR SALVAGE ALL ITEMS SHOWN TO BE DEMOLISHED AND/OR REMOVED, INCLUDING BUT NOT LIMITED TO PUMPS, HATCHES AND ELECTRICAL AND INSTRUMENTATION COMPONENTS. PRIOR TO INITIATING DEMOLITION WORK, THE CONTRACTOR AND THE DESIGNATED FIELD INSPECTOR SHALL MAKE A JOINT INSPECTION OF EACH SITE TO IDENTIFY ALL EQUIPMENT TO BE RETAINED BY THE CITY FOR SALVAGE OR REUSE. ITEMS IDENTIFIED FOR SALVAGE SHALL BE CAREFULLY REMOVED TO PROTECT FROM DAMAGE. ALL OTHER ITEMS SHOWN TO BE DEMOLISHED/REMOVED THAT ARE NOT RETAINED BY THE CITY SHALL BE PROPERLY REMOVED FROM THE SITE AND HANDLED PER SPECIFICATION 02220–DEMOLITION AT NO ADDITIONAL COST TO THE CITY. CONTACT DESIGNATED CITY REPRESENTATIVE (CAPITAL PROJECTS CONSTRUCTION INSPECTOR) FOR WASTEWATER TREATMENT PLANT SALVAGE AT LEAST 72 HOURS PRIOR TO DEMOLITION IN ORDER TO COORDINATE REMOVAL OF ANY ITEMS THE CITY WISHES TO CLAIM AND SALVAGE. THE CONTRACTOR SHALL DELIVER ALL SALVAGE ITEMS TO A LOCATION WITHIN THE CITY DETERMINED BY THE CITY.

NOTICE:
FOR YOUR SAFETY, YOU ARE REQUIRED BY TEXAS LAW TO CALL 811 AT LEAST 48 HOURS BEFORE YOU DIG SO THAT UNDERGROUND LINES CAN BE MARKED. THIS SIGNATURE DOES NOT FULFILL YOUR OBLIGATION TO CALL 811

VERIFICATION OF PRIVATE UTILITY LINES

Mike Brower — 07/31/26
Date

CenterPoint Energy natural gas utilities shown. (Gas service lines are not shown). This signature not be used for conflict verification.
Signature valid for six months.

Mike Brower — 07/31/26
Date

CenterPoint Energy/UNDERGROUND Electrical Facilities Verification ONLY. (This signature verifies existing underground facilities – not to be used for conflict verification)
Signature valid for six months.

Marc F Johnson — 7/28/26
Date

Approved for AT&T underground conduit facilities only.
Signature valid for one year.

HATCH
750 TOWN & COUNTRY BLVD
SUITE 650
HOUSTON, TX 77024
P: 832-930-7670
TX FIRM NUMBER: F-314

SURVEYED BY:
AMANI ENGINEERING, INC.
FB NO. P-6357

STATE OF TEXAS
MARK G. SCALLY
136279
LICENSED
PROFESSIONAL ENGINEER
5/1/26

CITY OF HOUSTON
HOUSTON PUBLIC WORKS

LIFT STATION RENEWAL & REPLACEMENT PROJECT
BROOKLET LS
CIVIL DEMOLITION PLAN

WBS NUMBER	FOR CITY OF HOUSTON USE ONLY
R-000267-0173-4	HOUSTON PUBLIC WORKS ACCEPTED AND FILED 82825 CITY DRAWING NUMBER Approval Date 08/14/26 HOUSTON TX
DRAWING SCALE	
AS NOTED	
CITY OF HOUSTON PM	
NUPUR KRISHNAN P.E. N.K.	
SHEET NO. 138 OF 274	

C1C25

PLOT STYLE: Grayscale.ctb PLOTTED: 2/5/2026 12:11 PM

FILE PATH: C:\pwworking\hatch-dpd-south_central_us\dms511138\H374729-0000-220-251-0008.dwg

CONSTRUCTION NOTES:

1. CONTRACTOR SHALL BE FULLY RESPONSIBLE FOR ANY DAMAGES TO EXISTING WATER, WASTEWATER, STORMWATER LINES AND TRAFFIC CONTROL DEVICES. ALL DAMAGES SHALL BE IN ACCORDANCE WITH THE "STANDARD CONSTRUCTION SPECIFICATION" REFERENCED AT NO COST TO THE CITY.
2. ADEQUATE DRAINAGE SHALL BE MAINTAINED AT ALL TIMES DURING CONSTRUCTION AND ANY DRAINAGE DITCH OR STRUCTURE DISTURBED DURING CONSTRUCTION SHALL BE RESTORED TO THE SATISFACTION OF THE OWNING AUTHORITY.
3. COAT WET WELL AND SAN MANHOLES IN ACCORDANCE WITH SPEC SECTION 09901
4. CONTRACTOR SHALL COORDINATE WITH CENTERPOINT ENERGY TO DE-ENERGIZE THE LIFT STATION AND OTHER ELECTRICAL EQUIPMENT ON SITE.
5. SANITARY SEWER MANHOLES AND HATCHES INSTALLED BELOW THE FLOODPLAIN ELEVATION SHALL HAVE WATERTIGHT MANHOLE FRAMES AND COVERS OR HATCHES.
6. CONTRACTOR SHALL COMPLY WITH THE LATEST EDITION OF OSHA REGULATIONS AND THE STATE OF TEXAS LAWS CONCERNING EXCAVATION.
7. CONTRACTOR TO COORDINATE LAYDOWN AREA WITH OWNER.
8. CONTRACTOR TO PROVIDE CONSTRUCTION JOINTS ON PROPOSED PAVING AT INTERVALS NO MORE THAN 15' O/C

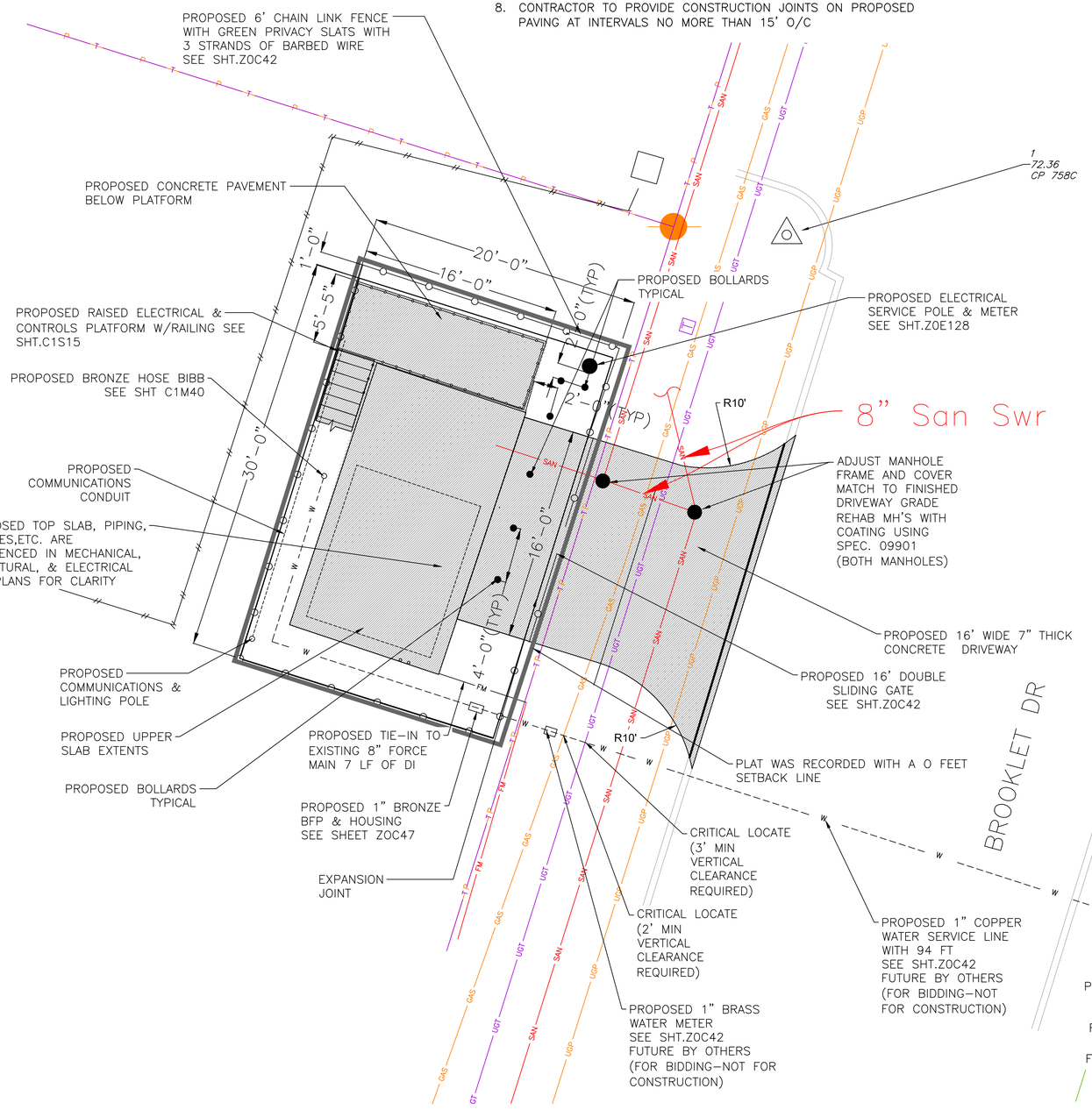

NOTES:

GENERAL

1. THIS IS A LIFT STATION REHABILITATION PROJECT (REPLACING PIPES, PUMPS, CONCRETE TOP SLAB AND HATCHES, AND ELECTRICAL FACILITIES) UNDER CONSENT DECREE FOR EARLY ACTION COMPLETION.
2. THIS PROPOSED SITE DEVELOPMENT PLAN PROVIDES A GENERAL OVERVIEW OF THE PROPOSED IMPROVEMENTS WITHIN THE SITE. PLEASE REFER TO PROPOSED SITE PLANS FOR ELECTRICAL, MECHANICAL, AND STRUCTURAL INFORMATION CONTAINED IN THIS DRAWING SET FOR MORE DETAILED INFORMATION.

PLANNING

1. THERE IS A BUILDING SETBACK LINE ZERO FT (0') FROM THE PROPERTY LINE.

PLATTING

1. THIS LIFT STATION SITE IS PART OF AND OUT OF UNRESTRICTED BLOCK 1, SOUTHWEST PARK, SECTION 1, FILED FOR RECORD AT VOL.163, PG.16, HCMR.

FLOODPLAIN

1. LS SITE IS WITHIN THE 100-YEAR FLOODPLAIN.
2. PROPOSED ELECTRICAL RACKS AND PANELS TO BE PLACED ON A RAISED PLATFORM. 500-YEAR + 3' ELEVATION = 80.18'.
3. NO NET FILL IS BEING PROPOSED IN THE FLOODPLAIN MITIGATION IS REQUIRED. NOT LOCATED IN A KNOWN FLOODPLAIN "CONVEYANCE" AREA.
4. WATERTIGHT HATCHES ARE PROPOSED FOR LIFT STATION WET WELL.

STORMWATER

1. DETENTION IS NOT REQUIRED FOR THE WORK PROPOSED.
2. LIFT STATION TRACT AREA = 600 SF. EXISTING IMPERVIOUS = 31.8%. INCREASE IN IMPERVIOUS = 211 SF.
3. THE PROPOSED WORK WILL NOT CHANGE OR ADD ANY SHEET FLOW TO ADJACENT PROPRIETIES.
4. DETENTION NOT REQUIRED FOR THE IMPERVIOUS AREA RESULTING FROM THE PROPOSED SITE DISTURBANCE FOR THE LIFT STATION REHAB. SHEET FLOW IS A REASONABLE METHOD FOR STORMWATER DRAINAGE AT THIS SITE.
5. NO DRAINAGE SYSTEM EXISTS OR IS PROPOSED SITE. POINT SOURCE DISCHARGE IS NOT APPLICABLE AT THIS SITE.

LANDSCAPING

1. SITE IS CONSTRAINT NOT PRACTICAL FOR REHABILITATION OF WASTEWATER LIFT STATION.

SIDEWALKS

1. NOT APPLICABLE FOR REHABILITATION OF WASTEWATER LIFT STATION.

OFF STREET PARKING

1. NOT APPLICABLE FOR REHABILITATION OF WASTEWATER LIFT STATION.

LEGEND :

- PROPOSED FENCE LINE
- PROPOSED CONCRETE PAVING EXTENTS
- PROPOSED BOLLARDS (2' FROM NEAREST STRUCTURE 4' FROM EACH OTHER)(TYP)

N

0 10 20 Feet

NO.	DATE	REVISION	APP.

NOTICE:
FOR YOUR SAFETY, YOU ARE REQUIRED BY TEXAS LAW TO CALL 811 AT LEAST 48 HOURS BEFORE YOU DIG SO THAT UNDERGROUND LINES CAN BE MARKED. THIS SIGNATURE DOES NOT FULFILL YOUR OBLIGATION TO CALL 811

VERIFICATION OF PRIVATE UTILITY LINES

Mike Brower 07/31/26
Date

CenterPoint Energy natural gas utilities shown. (Gas service lines are not shown). This signature not be used for conflict verification.
Signature valid for six months.

Mike Brower 07/31/26
Date

CenterPoint Energy/UNDERGROUND Electrical Facilities Verification ONLY. (This signature verifies existing underground facilities – not to be used for conflict verification)
Signature valid for six months.

Marc F Johnson 7/28/26
Date

Approved for AT&T underground conduit facilities only. Signature valid for one year.

FCM Engineers, PC
3300 S. Gessner Rd. Suite 249 Houston, Texas 77063
T- 713-706-4412
F- 713-706-4410

HATCH
750 TOWN & COUNTRY BLVD
SUITE 650
HOUSTON, TX 77024
P: 832-930-7670
TX FIRM NUMBER: F-314

SURVEYED BY:
AMANI ENGINEERING, INC
FB NO. P-6357

STATE OF TEXAS · FRANK C. MBACHU · 108363 · LICENSED · PROFESSIONAL ENGINEER · 7/28/26

CITY OF HOUSTON
HOUSTON PUBLIC WORKS

LIFT STATION RENEWAL & PROP SITE PLAN
BROOKLET LIFT STATION PROPOSED CIVIL SITE DEVELOPMENT PLAN

WBS NUMBER	R-000267-0173-4
DRAWING SCALE	AS NOTED
CITY OF HOUSTON PM	NUPUR KRISHNAN P.E. N.K.
SHEET NO.	139 OF 274

FOR CITY OF HOUSTON USE ONLY

HOUSTON PUBLIC WORKS
ACCEPTED AND FILED
82825
CITY DRAWING NUMBER
Approval Date 08/14/26
HOUSTON TX

C1C26

PLOTTED: 8/11/2026 4:25 PM

FILE PATH: Y:\2022071 LIFT STATIONS RENEWAL AND REPLACEMENT (HATCH) WBS NO. R-000267-0173-3\Auto CAD\Site Plan 90%\Brooklet Topo - Site Plan\Brooklet Site Plan R1.dwg

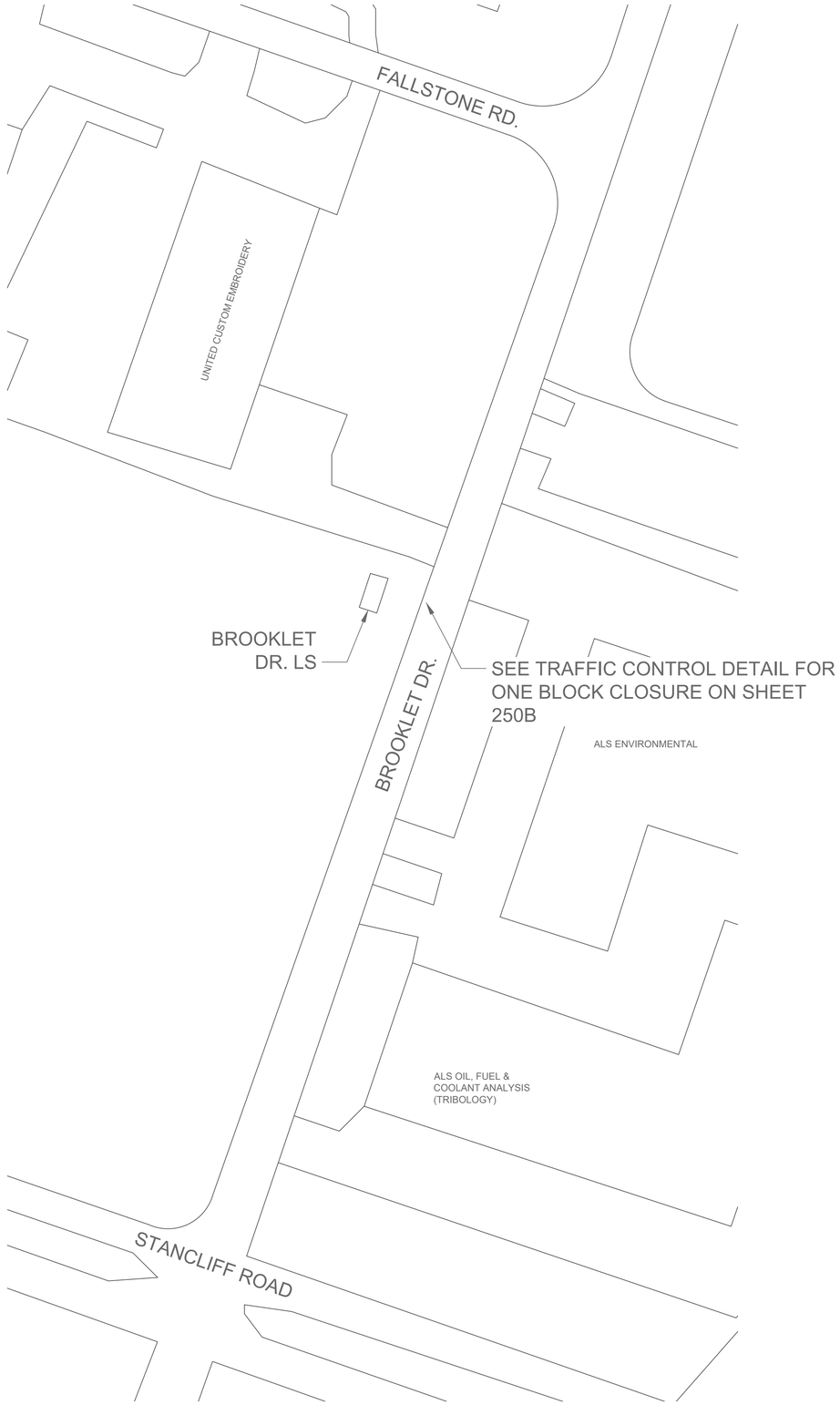

N

NO.	DATE	REVISION	APP.

0 40 80 Feet

Approved for AT&T underground conduit facilities only.
Signature valid for one year.

HATCH
750 TOWN & COUNTRY BLVD
SUITE 650
HOUSTON, TX 77024
P: 832-930-7670
TX FIRM NUMBER: F-314

SURVEYED BY:

STATE OF TEXAS
MARK G. SCALLY
136279
LICENSED PROFESSIONAL ENGINEER
9/17/26

CITY OF HOUSTON
HOUSTON PUBLIC WORKS

LIFT STATION RENEWAL & REPLACEMENT PROJECT
BROOKLET DR. LS
TRAFFIC CONTROL PLAN

WBS NUMBER	FOR CITY OF HOUSTON USE ONLY
R-000267-0173-4	HOUSTON PUBLIC WORKS ACCEPTED AND FILED 82825 CITY DRAWING NUMBER Approval Date 08/14/26 HOUSTON TX
DRAWING SCALE	
AS NOTED	
CITY OF HOUSTON PM	
NUPUR KRISHNAN, P.E. N.K.	
SHEET NO. 140 OF 274	

C1C27

PLOT STYLE: Grayscale.ctb PLOTTED: 2/2/2026 9:23 AM

FILE PATH: C:\pwworking\hatch-dpd-south_central_us\dms51143\H374729-0300-220-271-0001.dwg

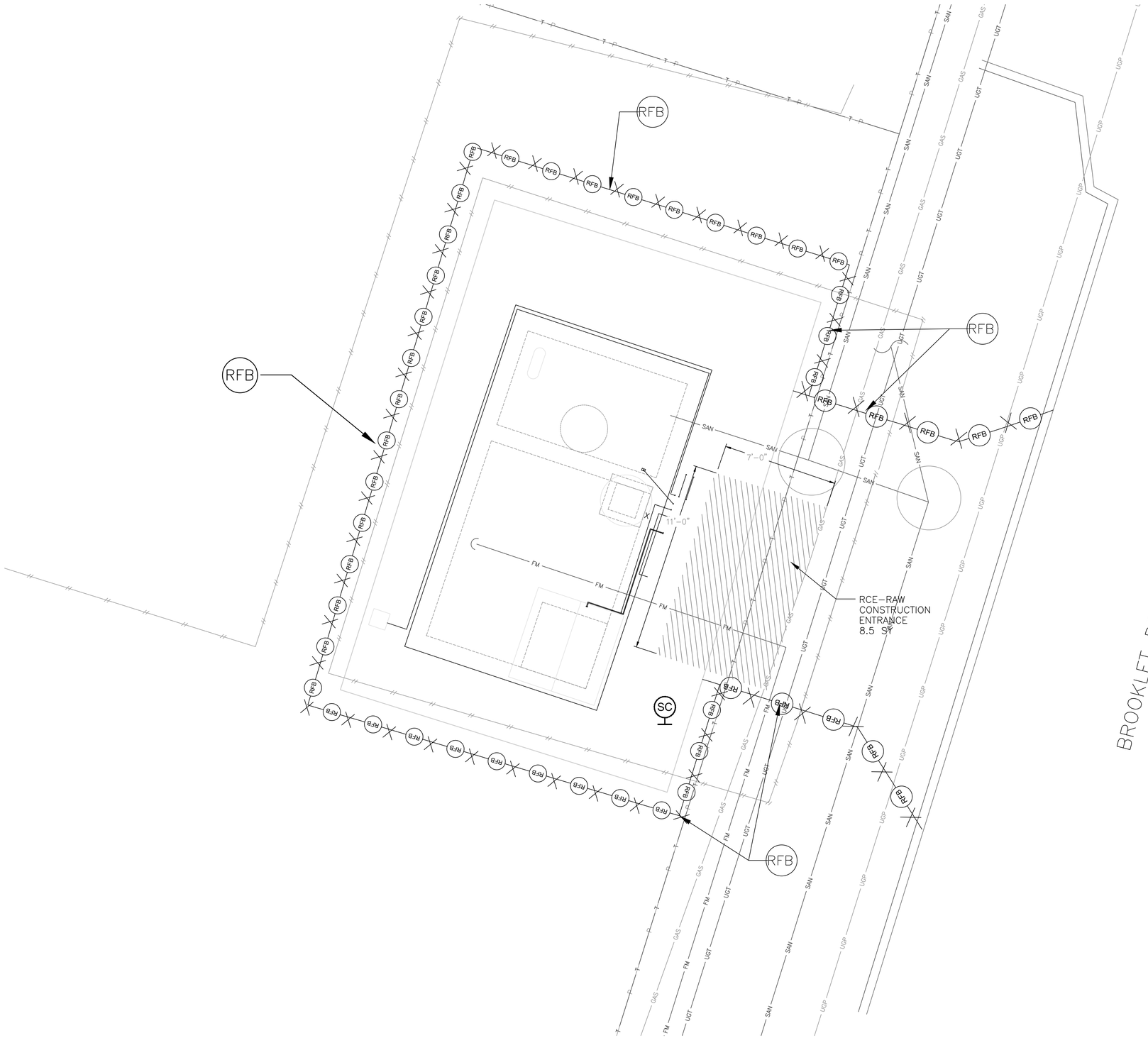

N

0 10 20 Feet

NO.	DATE	REVISION	APP.

LEGEND :

- RFB — REINFORCED FILTER FABRIC BARRIER.
- FF — FILTER FABRIC BARRIER.
- IPB2 — INLET PROTECTION BARRIER.
- SC — STABILIZED CONSTRUCTION ACCESS

NOTES:

1. STORM WATER POLLUTION PLAN CONFORM TO SPECIFICATIONS AND DRAWINGS.
2. ALL DISTURBED AREAS THAT ARE NOT PAVED OR COVERED BY STRUCTURE SHALL BE SODDED OR HYDROMULCH SEEDED.
3. CONTRACTOR'S LAY DOWN/STORAGE AREA SHALL HAVE A STABILIZED CONSTRUCTION EXIT.
4. SEE SHEET Z0G06 FOR STORM WATER POLLUTION PREVENTION PLAN NOTES AND DETAILS.
5. CONTRACTOR SHALL PROVIDE A STABILIZED CONSTRUCTION EXIT, INCLUDING TRUCK WASHING AREA, VERIFIED IN THE FIELD AND AUTHORIZED BY ENGINEER.

FCM Engineers, PC
3300 S. Gessner Rd.
Suite 249
Houston, Texas 77063
T- 713-706-4412
F- 713-706-4410

HATCH
750 TOWN & COUNTRY BLVD
SUITE 650
HOUSTON, TX 77024
P: 832-930-7670
TX FIRM NUMBER: F-314

SURVEYED BY:
AMANI ENGINEERING, INC
FB NO. P-6357

STATE OF TEXAS
FRANK C. MBACHU
108383
LICENSED
PROFESSIONAL ENGINEER
3/23/2026

CITY OF HOUSTON
HOUSTON PUBLIC WORKS

LIFT STATION RENEWAL & REPLACEMENT PROJECT
BROOKLET LIFT STATION
CIVIL SWPPP

WBS NUMBER
R-000267-0173-4
DRAWING SCALE
AS NOTED
CITY OF HOUSTON PM
NUPUR KRISHNAN P.E. N.K.

FOR CITY OF HOUSTON USE ONLY

HOUSTON PUBLIC WORKS
ACCEPTED AND FILED
82825
CITY DRAWING NUMBER
Approval Date 08/14/26
HOUSTON TX

C1C28 SHEET NO. 141 OF 274

FILE PATH: Y:\2022071 LIFT STATIONS RENEWAL AND REPLACEMENT (HATCH) WBS NO. R-000267-0173-3\Auto CAD\New SWPPP\Brooklet Topo\BASE-BrookletLS.dwg PLOT STYLE: Grayscale.ctb PLOTTED: 6/5/2026 10:46 AM

PLOT STYLE: Monochrome.ctb PLOTTED: 8/10/2026 8:06 PM

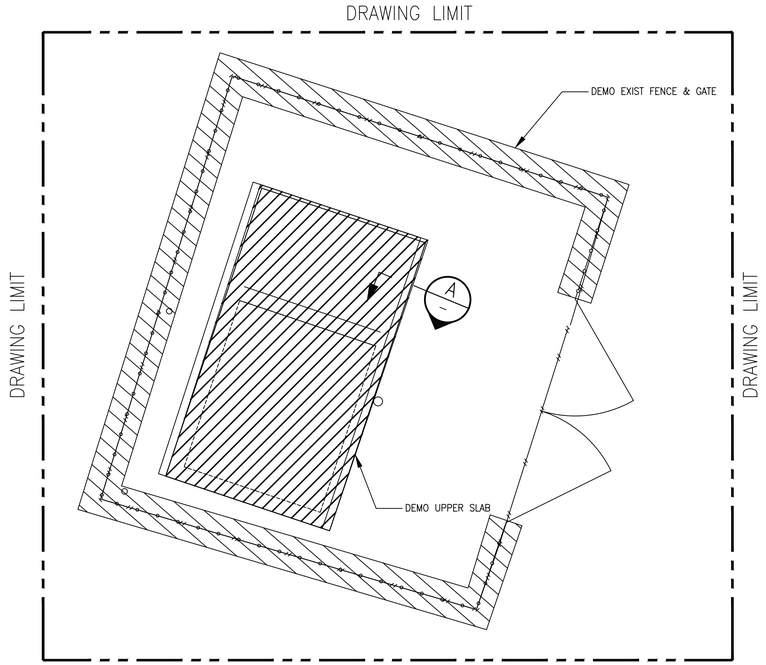

DEMO PLAN – TOP SLAB
SCALE: 1"=10'–0"

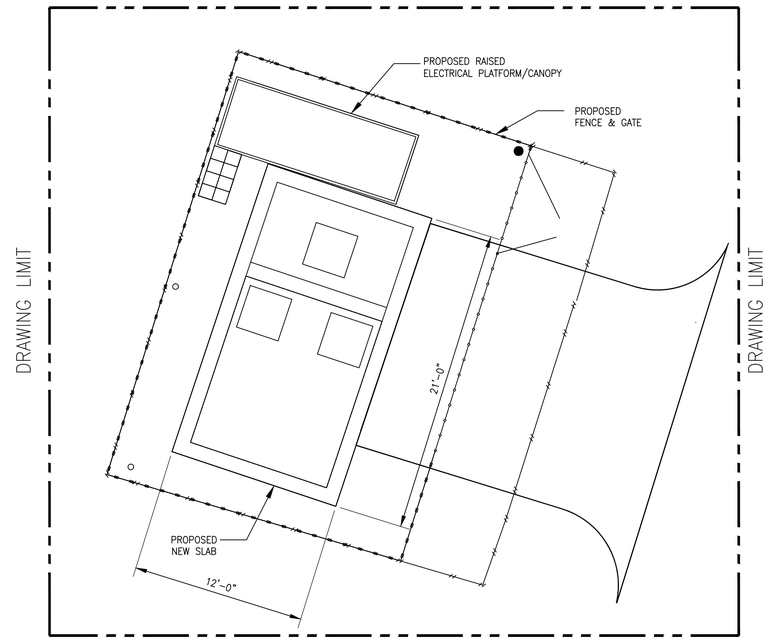

NEW PLAN LAYOUT – TOP SLAB
SCALE: 1"=10'–0"

NOTE:

THE CITY SHALL HAVE THE FIRST RIGHT OF REFUSAL TO RETAIN OR SALVAGE ALL ITEMS SHOWN TO BE DEMOLISHED AND/OR REMOVED, INCLUDING BUT NOT LIMITED TO PUMPS, HATCHES, AND ELECTRICAL AND INSTRUMENTATION COMPONENTS. PRIOR TO INITIATING DEMO WORK, THE CONTRACTOR AND THE DESIGNATED FIELD INSPECTOR SHALL MAKE A JOINT INSPECTION OF EACH TO IDENTIFY ALL EQUIPMENT TO BE RETAINED BY THE CITY FOR SALVAGE AND REUSE. ITEMS IDENTIFIED FOR SALVAGE SHALL BE CAREFULLY REMOVED TO PROTECT FROM DAMAGE. ALL OTHER ITEMS SHOWN TO BE DEMOLISHED / REMOVED THAT ARE NOT RETAINED BY THE CITY SHALL BE PROPERLY REMOVED FROM THE SITE AND HANDLED PER SPECIFICATIONS AT NO ADDITIONAL COST TO THE CITY. CONTACT CITY DESIGNATED CITY REPRESENTATIVE FOR WASTEWATER TREATMENT PLANT SALVAGE AT LEAST 72 HOURS PRIOR TO DEMOLITION IN ORDER TO COORDINATE REMOVAL OF ANY ITEMS THE CITY WISHES TO CLAIM AND SALVAGE. THE CONTRACTOR SHALL DELIVER ALL SALVAGE ITEMS TO A LOCATION WITHIN THE CITY DETERMINED BY THE CITY.

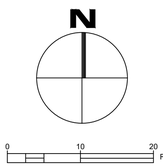

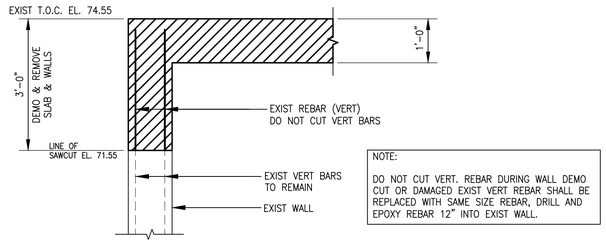

A: TYPICAL DEMO SECTION
SCALE: N.T.S

NO.	DATE	REVISION	APP.

FCM Engineers, PC
3300 S. Gessner Rd.
Suite 249
T- 713-706-4412
F- 713-706-4410
Tx Firm No. 13481

HATCH
750 TOWN & COUNTRY BLVD
SUITE 650
HOUSTON, TX 77024
P: 832-930-7670
TX FIRM NUMBER: F-314

STATE OF TEXAS
CHARLES C.A. MGBEIKE
73307
LICENSED
PROFESSIONAL ENGINEER
05/19/26

SURVEYED BY:
AMANI ENGINEERING, INC
FB NO. P-6357

CITY OF HOUSTON
HOUSTON PUBLIC WORKS

LIFT STATION RENEWAL & REPLACEMENT PROJECT
BROOKLET LIFT STATION
PROPOSED DEMOLITION & STRUCTURAL PLAN

WBS NUMBER	FOR CITY OF HOUSTON USE ONLY
R-000267-0173-4	HOUSTON PUBLIC WORKS ACCEPTED AND FILED 82825 CITY DRAWING NUMBER Approval Date 08/14/26 HOUSTON TX
DRAWING SCALE	
AS NOTED	
CITY OF HOUSTON PM	
NUPUR KRISHNAN P.E. N.K.	
C1S13	SHEET NO. 142 OF 274

FILE PATH: C:\Users\francis.iheagwara\Desktop\FOI\Lift Station\CAD\MBK\Brooklet\FINAL\Brooklet Demo-Const.dwg

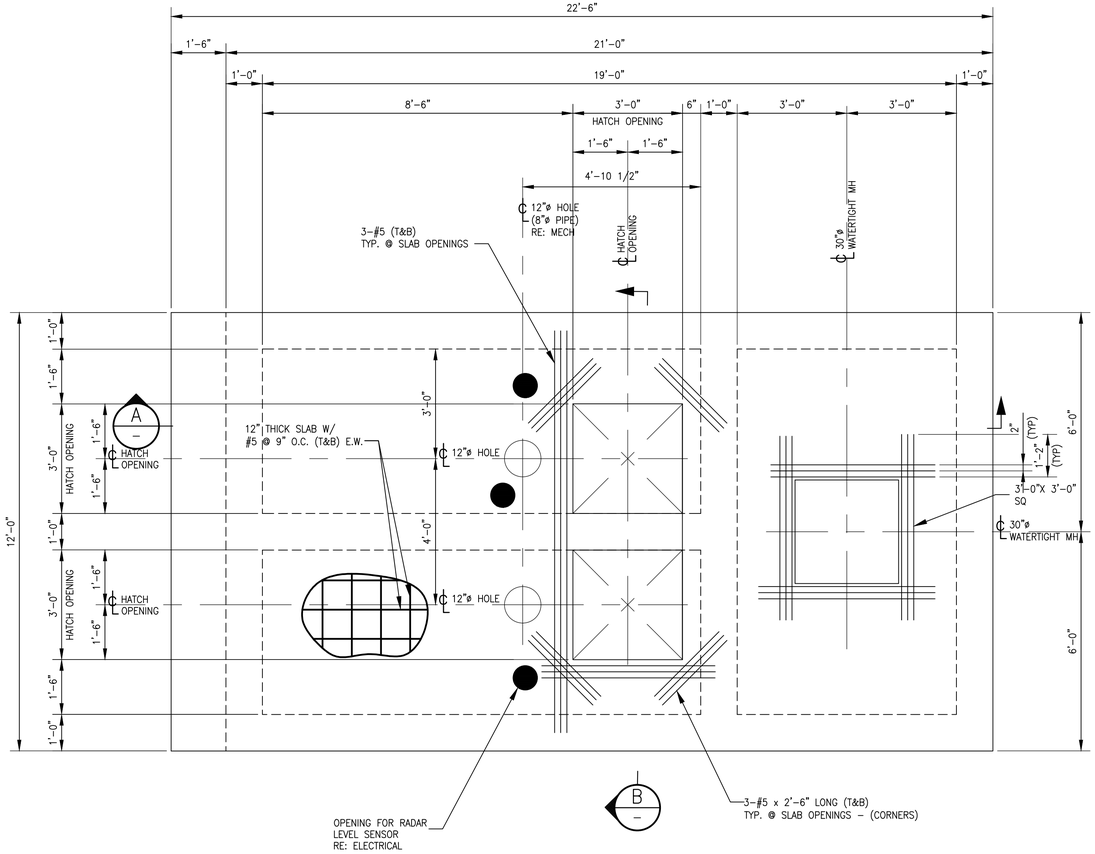

PLAN
LIFT STATION TOP SLAB
SCALE: 1/2" = 1'-0"

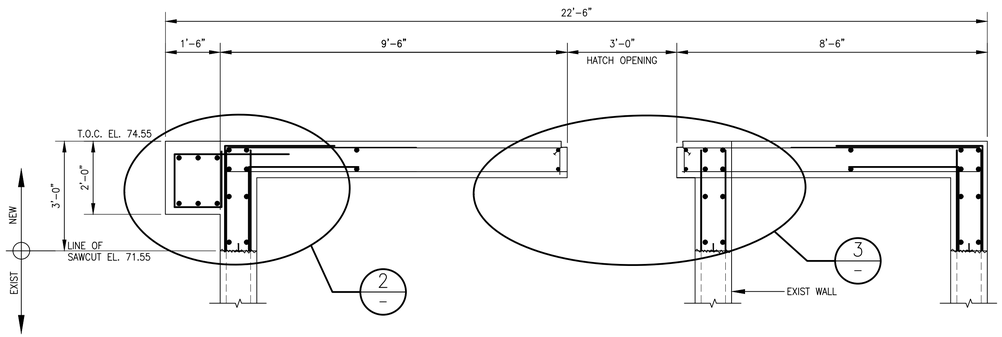

SECTION
SCALE: 1/2" = 1'-0" — A

NOTE:

1. REFER TO SHEET ZOS21 FOR STRUCTURAL GENERAL NOTES
2. REFER TO MECHANICAL/VENDOR DRAWINGS FOR WATERPROOF HATCHES/MANHOLES HATCHES SHALL BE SIZED PER PUMP MANUFACTURER AND SHALL BE FLUSHED WITH THE PROPOSED TOP SLAB
3. CONTRACTOR SHALL FIELD VERIFY AND COORDINATE ALL DIMENSION W/MEP & CIVIL PLANS PRIOR TO BIDDING WORK.
4. REFER TO ELECTRICAL FOR RADAR LEVEL SENSOR OPENINGS & MECHANICAL DRAWING FOR OTHER PIPE PENETRATIONS, CONDUITS, VENTS ETC.
5. REFER TO SPECS 09901 FOR WET WELL WALL CLEANING & COATING SPECS.
6. REFER TO COH STD DETAILS ZOS22, 23, 24, 25, 26.

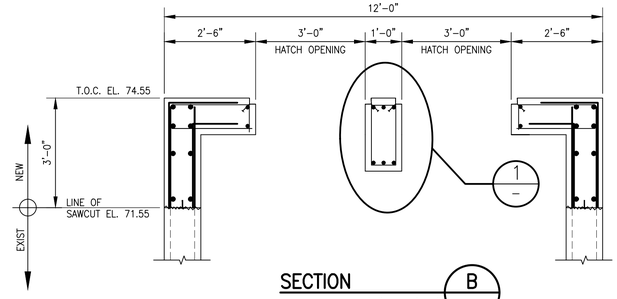

SECTION
SCALE: 1/2" = 1'-0" — B

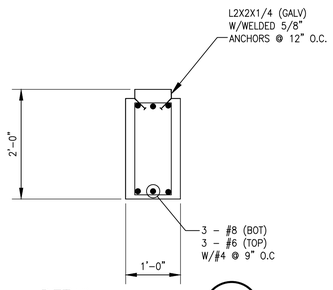

DETAIL
SCALE: 3/4" = 1'-0" — 1

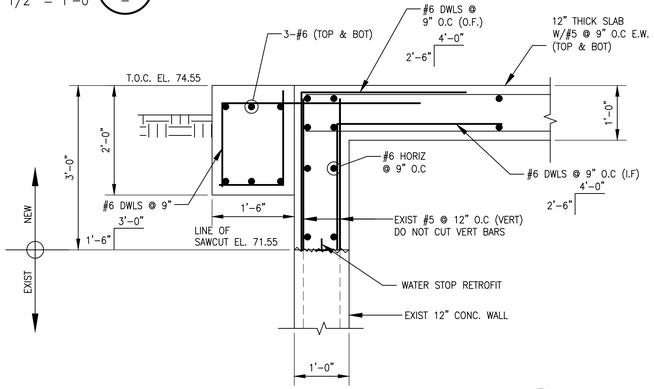

DETAIL
SCALE: 3/4" = 1'-0" — 2

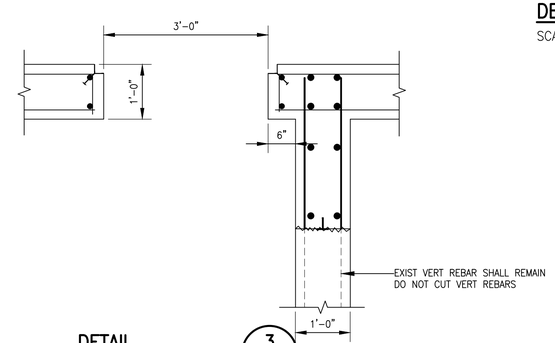

DETAIL
SCALE: 3/4" = 1'-0" — 3

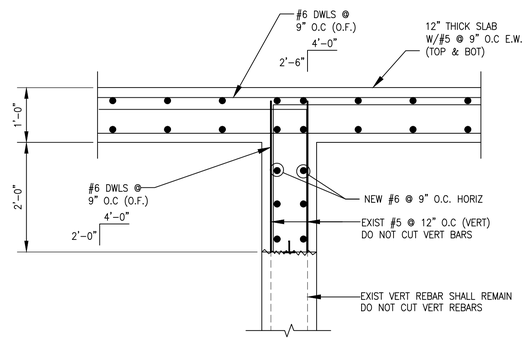

TYPICAL INTERIOR WALL DETAIL
SCALE: 3/4"= 1'-0"

NO.	DATE	REVISION	APP.
A	10/30/25	CLIENT REVIEW	LL

FCM Engineers, PC
3300 S. Gessner Rd. Suite 249
T- 713-706-4412
F- 713-706-4410
Tx Firm No. 13481

HATCH
750 TOWN & COUNTRY BLVD
SUITE 650
HOUSTON, TX 77024
P: 832-930-7670
TX FIRM NUMBER: F-314

SURVEYED BY:
AMANI ENGINEERING, INC
FB NO. P-6357

STATE OF TEXAS — CHARLES C.A. MOBEIKE — 73307 — LICENSED PROFESSIONAL ENGINEER — 05/19/26

CITY OF HOUSTON
HOUSTON PUBLIC WORKS

LIFT STATION RENEWAL & REPLACEMENT PROJECT
BROOKLET LIFT STATION
PROPOSED STRUCTURAL PLAN, SECTIONS & DETAILS

WBS NUMBER	FOR CITY OF HOUSTON USE ONLY
R-000267-0173-4	HOUSTON PUBLIC WORKS ACCEPTED AND FILED 82825 CITY DRAWING NUMBER Approval Date 08/14/26 HOUSTON TX
DRAWING SCALE	
AS NOTED	
CITY OF HOUSTON PM	
NUPUR KRISHNAN P.E. N.K.	

C1S14 — SHEET NO. 143 OF 274

PLOT STYLE: Monochrome.ctb PLOTTED: 8/10/2026 8:07 PM

FILE PATH: C:\Users\francis.iheagwara\Desktop\FOI\Lift Station\CAD\MBK\Brooklet\FINAL\Brooklet LS New Slab.dwg

PLOT STYLE: Monochrome.ctb PLOTTED: 8/10/2026 8:05 PM
FILE PATH: C:\Users\francis.iheagwara\Desktop\FOI\Lift Station\CAD\MBK\Brooklet\FINAL\ELEVATED ELECTRICAL CABINET PLTF FOUNDATION.dwg

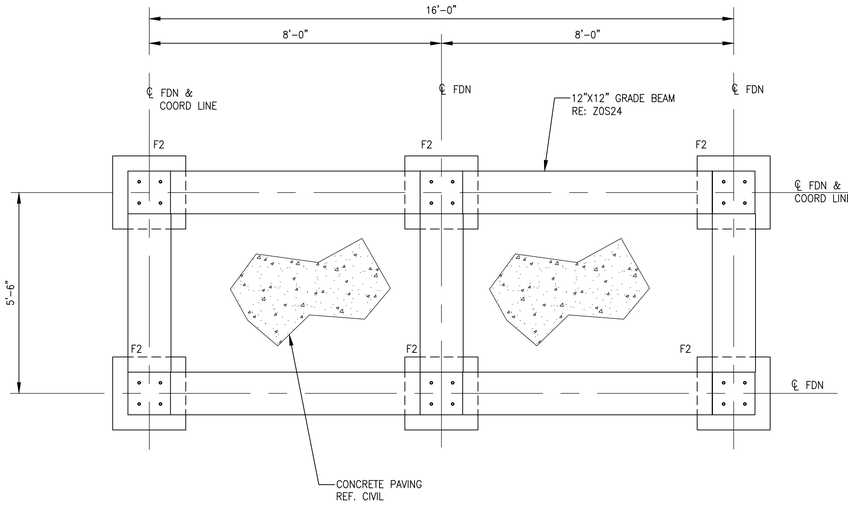

PLAN
PLATFORM FOUNDATION
SCALE: 1/2" = 1'-0"

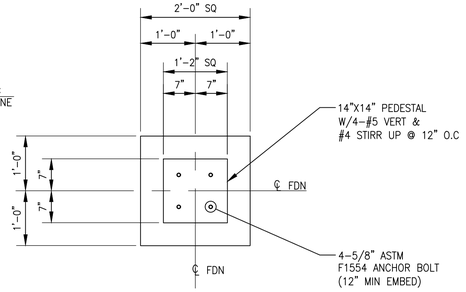

TYPICAL F2 FOUNDATION
SCALE: 3/4" = 1'-0"
(6 REQ'D)

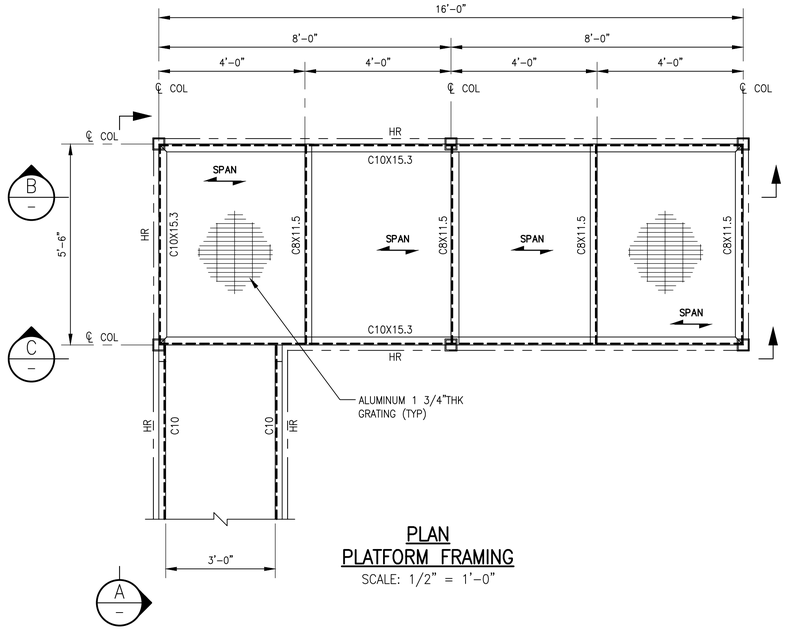

PLAN
PLATFORM FRAMING
SCALE: 1/2" = 1'-0"

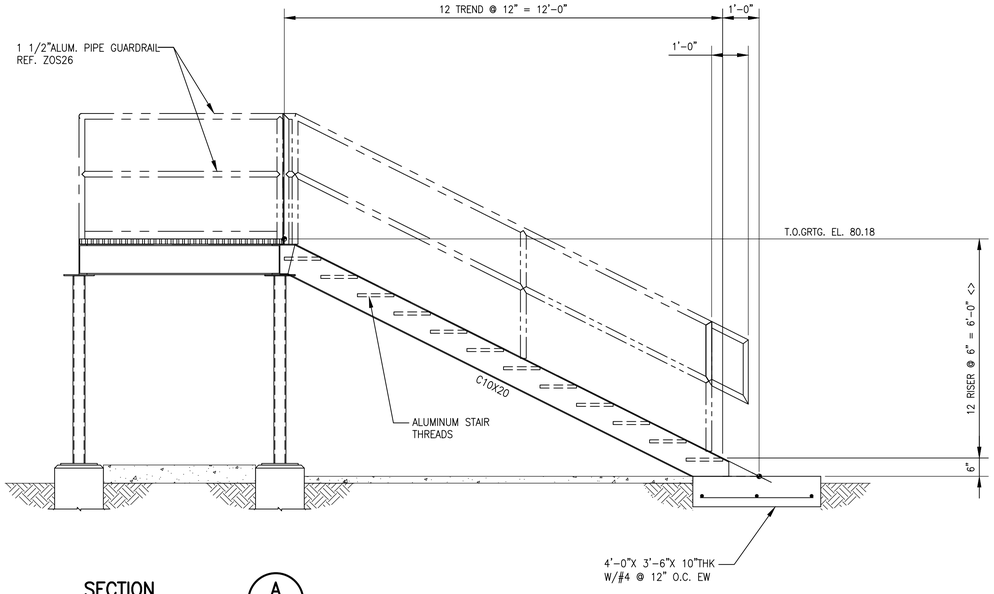

SECTION A
SCALE: 1/2" = 1'-0"

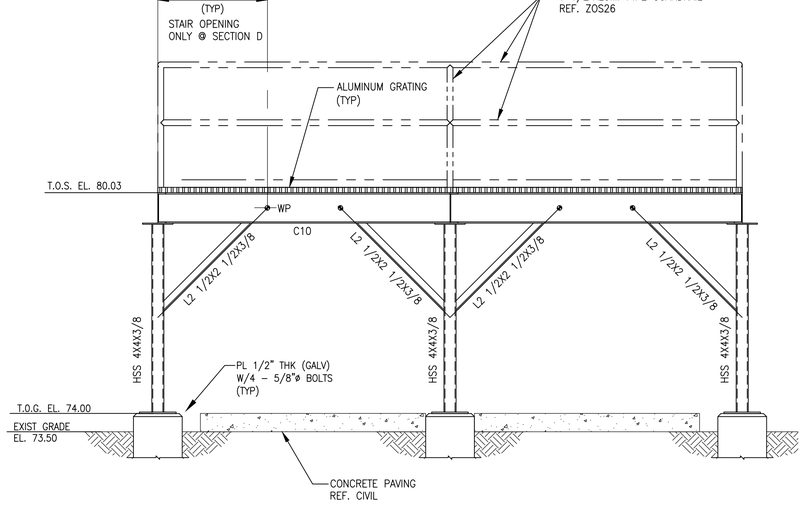

SECTION B C
SCALE: 1/2" = 1'-0"

NOTE:

1. REFER TO SHEET ZOS21 FOR STRUCTURAL GENERAL NOTES
2. CONTRACTOR SHALL FIELD VERIFY AND COORDINATE ALL DIMENSIONS W/MEP & CIVIL PLANS PRIOR TO BIDDING WORK.
3. REFER TO COH STD DETAILS ZOS22, 23, 24, 25, 26.
4. ALL STRUCTURAL STEEL SHALL BE HOT DIPPED GALV.
5. ALL ALUM SHALL BE POWDER COATED DARK GREEN PER ZOS21.
6. ALL GRATING SHALL BE ALUMINUM.

NO.	DATE	REVISION	APP.

FCM Engineers, PC
3300 S. Gessner Rd. Suite 249
T- 713-706-4412
F- 713-706-4410
Tx Firm No. 13481

HATCH
750 TOWN & COUNTRY BLVD
SUITE 650
HOUSTON, TX 77024
P: 832-930-7670
TX FIRM NUMBER: F-314

SURVEYED BY:
AMANI ENGINEERING, INC
FB NO. P-6357

STATE OF TEXAS
CHARLES C.A. MGBEIKE
73307
LICENSED PROFESSIONAL ENGINEER
05/19/26

CITY OF HOUSTON
HOUSTON PUBLIC WORKS

LIFT STATION RENEWAL & REPLACEMENT PROJECT
BROOKLET LIFT STATION
PROPOSED STRUCTURAL ELECTRICAL PLATFORM FOUNDATION & STEEL PLANS & SECTIONS

WBS NUMBER
R-000267-0173-4
DRAWING SCALE
AS NOTED
CITY OF HOUSTON PM
NUPUR KRISHNAN P.E. N.K.

FOR CITY OF HOUSTON USE ONLY

HOUSTON PUBLIC WORKS
ACCEPTED AND FILED
82825
CITY DRAWING NUMBER
Approval Date 08/14/26
HOUSTON TX

C1S15 | SHEET NO. 144 OF 274

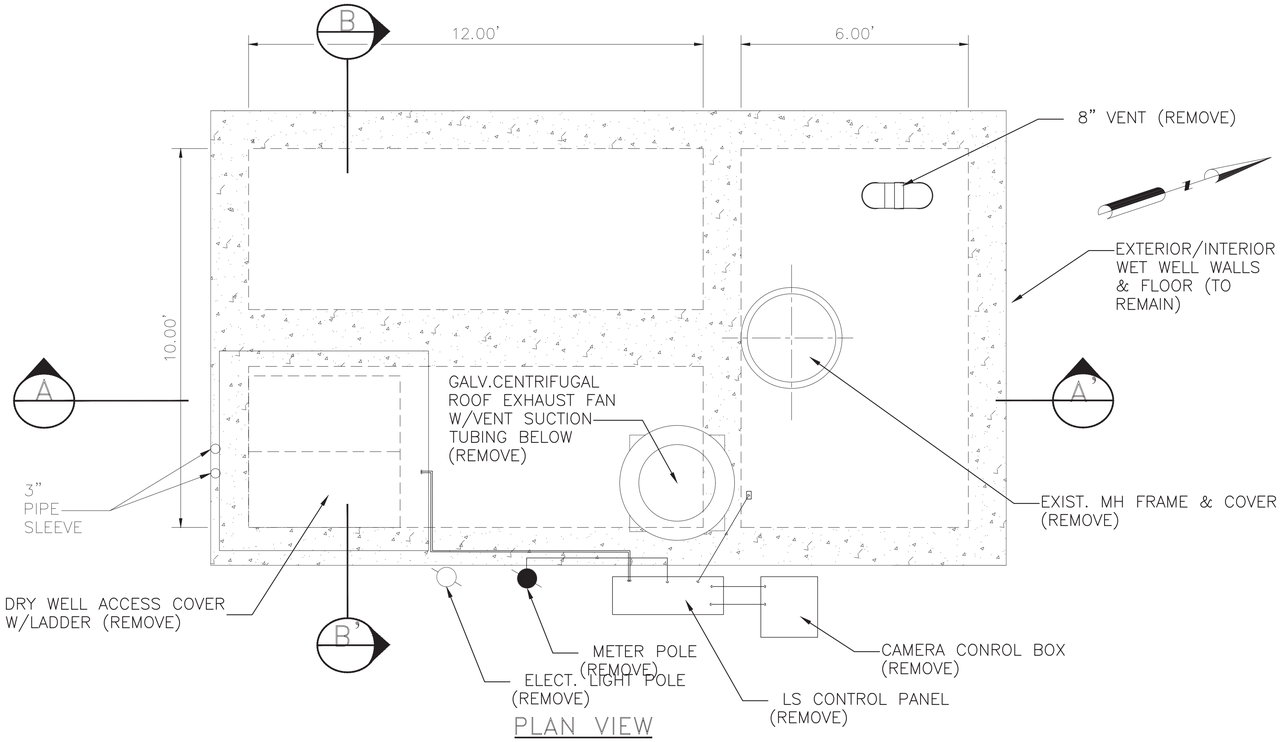

PLAN VIEW

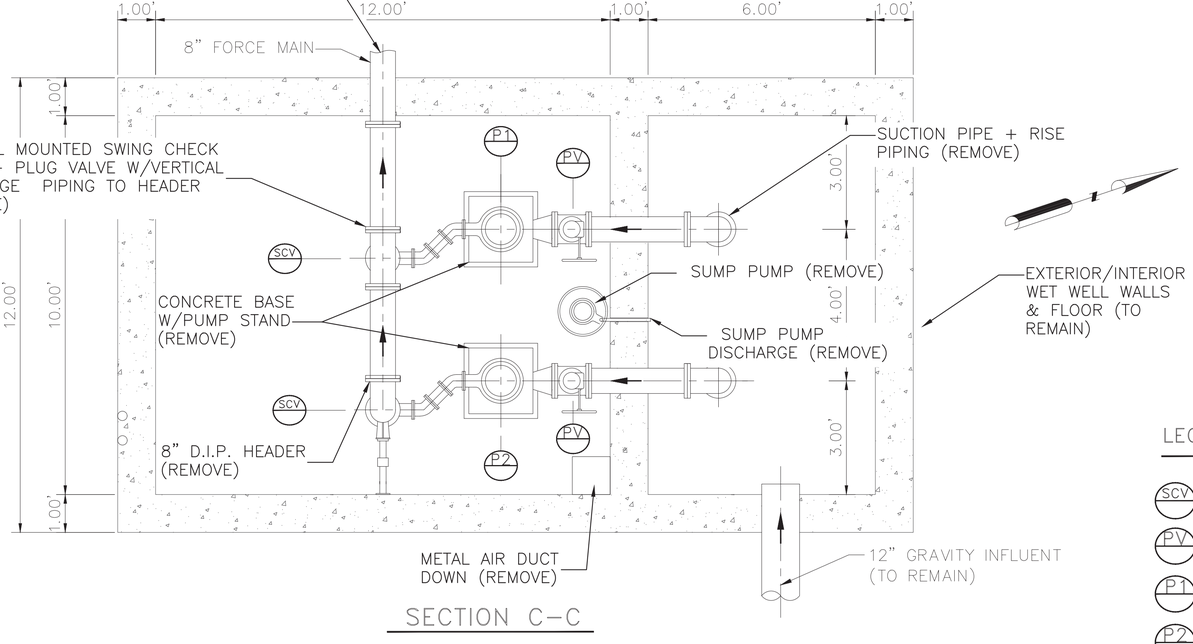

SECTION C-C

DEMOLITION NOTES:

1. THIS DRAWING IS BASED ON AVAILABLE RECORDS AND FIELD OBSERVATIONS. THE CONTRACTOR SHALL SATISFY HIMSELF / HERSELF OF THE ACTUAL CONDITIONS EXISTING AT THE SITE. THIS DRAWING DEPICTS PRIMARY MECHANICAL FEATURES. NOT ALL FEATURES, INCLUDING ELECTRICAL ARE NECESSARILY DEPICTED HEREON. THE CONTRACTOR SHALL BE RESPONSIBLE FOR REMOVING ALL EXISTING EQUIPMENT WITHIN THE EXISTING STRUCTURE AS A PRECURSOR TO CONSTRUCTION OF THE PROPOSED IMPROVEMENTS.
2. DEMOLISH AND REMOVE TOP AND SIDE WALLS OF LIFT STATION TO 2-FEET 6-INCHES BELOW LIFT STATION TOP SLAB ELEVATION. STEEL IN WALLS TO REMAIN (WHERE POSSIBLE) AND BE USED TO DEVELOP REINFORCEMENT FOR NEW TOP SLAB (REFER TO STRUCTURAL DETAILS).
3. THE CONTRACTOR SHALL NOT PROCEED WITH DEMOLITION WORK UNTIL AUTHORIZED. LIFT STATION BYPASS PUMPING MUST BE IN PLACE WITH OPERATIONAL ADEQUACY CHECKED AND CONFIRMED BY THE CITY BEFORE PROCEEDING WITH DEMOLITION WORK.
4. THE CONTRACTOR SHALL BE RESPONSIBLE FOR OBTAINING ANY PERMIT(S) REQUIRED FOR DEMOLITION WORK.
5. ALL ITEMS DAMAGED OR REMOVED BY THE CONTRACTOR AND NOT SPECIFICALLY DESIGNATED FOR DEMOLITION SHALL BE REPAIRED OR REPLACED BY THE CONTRACTOR AT NO COST TO THE CITY.
6. THE CONTRACTOR MAY DISCHARGE LIQUID WASTE AND WASH DOWN TO THE CITY WASTEWATER COLLECTION SYSTEM, HOWEVER; ALL DISCHARGES MUST BE COMPLIANT WITH THE CITY'S INDUSTRIAL WASTE ORDINANCE, CHAPTER 47, ARTICLE V. THE CONTRACTOR IS ADVISED THAT A PERMIT OR TEMPORARY DISCHARGE AUTHORIZATION MAY BE REQUIRED. CONTACT THE INDUSTRIAL WASTEWATER DIVISION AT (832) 395-5800. IN LIEU OF A DISCHARGE AUTHORIZATION, THE CONTRACTOR SHALL COLLECT AND HAUL, AT CONTRACTOR EXPENSE, ALL NON-SOLID DISCHARGES TO AN APPROVED CITY FACILITY.
7. REFER TO STRUCTURAL AND ELECTRICAL DEMOLITION DRAWINGS FOR INFORMATION RELATED TO THOSE SPECIFIC ACTIVITIES.
8. THE CITY SHALL HAVE THE FIRST RIGHT OF REFUSAL TO RETAIN OR SALVAGE ALL ITEMS SHOWN TO BE DEMOLISHED AND/OR REMOVED, INCLUDING BUT NOT LIMITED TO PUMPS, HATCHES, AND ELECTRICAL AND INSTRUMENTATION COMPONENTS. PRIOR TO INITIATING DEMO WORK, THE CONTRACTOR AND THE DESIGNATED FIELD INSPECTOR SHALL MAKE A JOINT INSPECTION OF EACH SITE TO IDENTIFY ALL EQUIPMENT TO BE RETAINED BY THE CITY FOR SALVAGE AND REUSE. ITEMS IDENTIFIED FOR SALVAGE SHALL BE CAREFULLY REMOVED TO PROTECT FROM DAMAGE. ALL OTHER ITEMS SHOWN TO BE DEMOLISHED / REMOVED THAT ARE NOT RETAINED BY THE CITY SHALL BE PROPERLY REMOVED FROM THE SITE AND HANDLED PER SPECIFICATIONS AT N O ADDITIONAL COST TO THE CITY. CONTACT CITY DESIGNATED CITY REPRESENTATIVE FOR WASTEWATER TREATMENT PLANT SALVAGE AT LEAST 72 HOURS PRIOR TO DEMOLITION IN ORDER TO COORDINATE REMOVAL OF ANY ITEMS THE CITY WISHES TO CLAIM AND SALVAGE. THE CONTRACTOR SHALL DELIVER ALL SALVAGE ITEMS TO A LOCATION WITHIN THE CITY DETERMINED BY THE CITY.

LEGEND

- SCV — SWING CHECK VALVE (REMOVE)
- PV — PLUG VALVE (REMOVE)
- P1 — FLYGT 3102-5hp SUBMERSIBLE PUMP (REMOVE)
- P2 — FLYGT 3102-5hp SUBMERSIBLE PUMP (REMOVE)

AMANI ENGINEERING, INC.
11011 RICHMOND AVENUE
SUITE 700
HOUSTON, TEXAS 77024
TEL: (713) 270-5700
TBPE REG. NO. F-4528
TBPELS REG. NO. 1028200

HATCH
750 TOWN & COUNTRY BLVD.
SUITE 650
HOUSTON, TEXAS 77024
P:832-930-7670
TX FIRM NUMBER: F-314

SURVEYED BY:
AMANI ENGINEERING,INC.
FB NO. P-6357

STATE OF TEXAS
DAVID L BROWN
48282
REGISTERED
PROFESSIONAL
SURVEYOR
8/11/2026

CITY OF HOUSTON
HOUSTON PUBLIC WORKS

LIFT STATION RENEWAL & REPLACEMENT PROJECT

BROOKLET LIFT STATION
EXISTING SURFACE & SECTIONAL PLAN VIEWS MECHANICAL DEMOLITION

WBS NUMBER	R-000267-0173-4
DRAWING SCALE	Scale 1"=2'
CITY OF HOUSTON PM	NUPUR KRISHNAN, PE N.K.
SHEET NO. 145 OF 246	C1M33

FOR CITY OF HOUSTON USE ONLY

HOUSTON PUBLIC WORKS
ACCEPTED AND FILED
82825
CITY DRAWING NUMBER
Approval Date 08/14/26
HOUSTON TX

FILE NAME:
PLOTTED ON:

0 1 2 3 ORIGINAL SCALE IN INCHES FOR REDUCED PLANS

P:\Cody\2024\24013 - Hatch - COH FY20 Lift Stations\CAD_DWG\LIFT STATIONS MECHANICAL DEMOLITION PLAN\2-BROOKLETDEMOLITION 11 2025.dwg

THE CITY SHALL HAVE THE FIRST RIGHT OF REFUSAL TO RETAIN OR SALVAGE ALL ITEMS SHOWN TO BE DEMOLISHED AND/OR REMOVED, INCLUDING BUT NOT LIMITED TO PUMPS, HATCHES, AND ELECTRICAL AND INSTRUMENTATION COMPONENTS. PRIOR TO INITIATING DEMO WORK, THE CONTRACTOR AND THE DESIGNATED FIELD INSPECTOR SHALL MAKE A JOINT INSPECTION OF EACH SITE TO IDENTIFY ALL EQUIPMENT TO BE RETAINED BY THE CITY FOR SALVAGE AND REUSE. ITEMS IDENTIFIED FOR SALVAGE SHALL BE CAREFULLY REMOVED TO PROTECT FROM DAMAGE. ALL OTHER ITEMS SHOWN TO BE DEMOLISHED / REMOVED THAT ARE NOT RETAINED BY THE CITY SHALL BE PROPERLY REMOVED FROM THE SITE AND HANDLED PER SPECIFICATIONS AT N O ADDITIONAL COST TO THE CITY. CONTACT CITY DESIGNATED CITY REPRESENTATIVE FOR WASTEWATER TREATMENT PLANT SALVAGE AT LEAST 72 HOURS PRIOR TO DEMOLITION IN ORDER TO COORDINATE REMOVAL OF ANY ITEMS THE CITY WISHES TO CLAIM AND SALVAGE. THE CONTRACTOR SHALL DELIVER ALL SALVAGE ITEMS TO A LOCATION WITHIN THE CITY DETERMINED BY THE CITY.

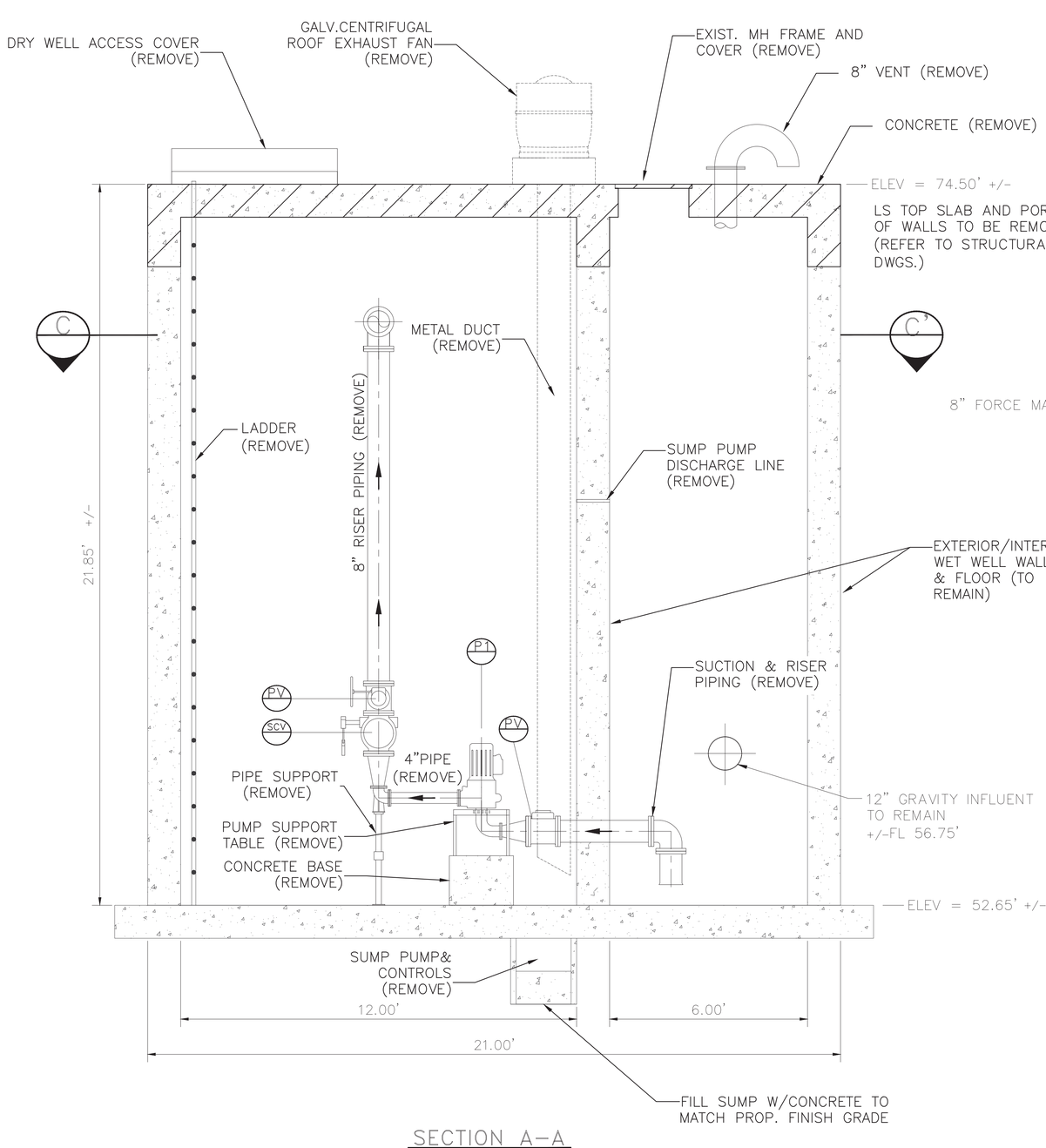

SECTION A–A

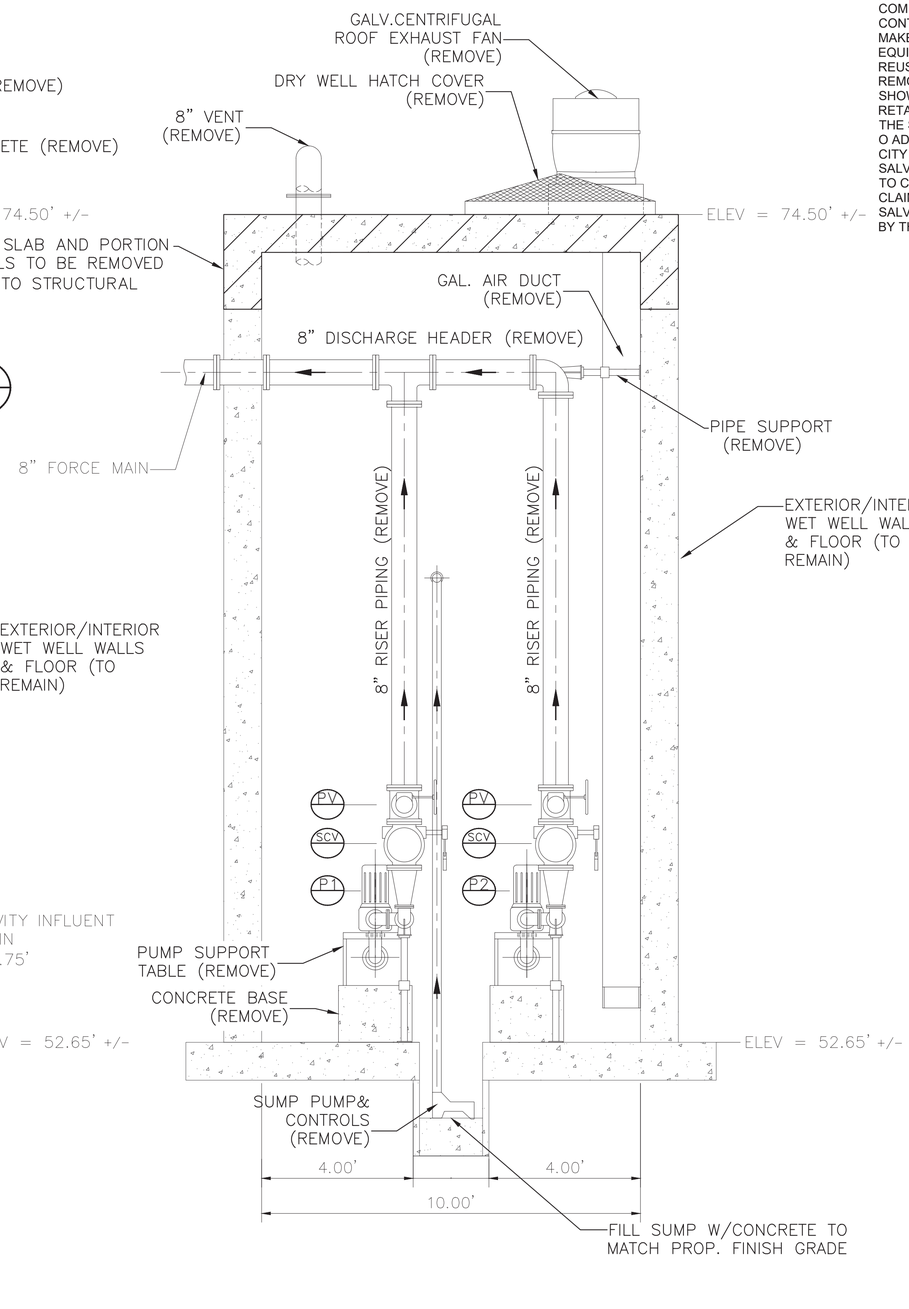

SECTION B–B

LEGEND

- SCV — SWING CHECK VALVE (REMOVE)
- PV — PLUG VALVE (REMOVE)
- P1 — FLYGT 3102–5hp SUBMERSIBLE PUMP (REMOVE)
- P2 — FLYGT 3102–5hp SUBMERSIBLE PUMP (REMOVE)

AMANI ENGINEERING, INC.
11011 RICHMOND AVENUE
SUITE 700
HOUSTON, TEXAS 77024
TEL: (713) 270–5700
TBPE REG. NO. F–4528
TBPELS REG. NO. 1028200

HATCH
750 TOWN & COUNTRY BLVD.
SUITE 650
HOUSTON, TEXAS 77024
P:832–930–7670
TX FIRM NUMBER: F–314

SURVEYED BY:
AMANI ENGINEERING,INC.
FB NO. P–6357

STATE OF TEXAS
DAVID L BROWN
48282
REGISTERED
PROFESSIONAL
ENGINEER
8/11/2026

CITY OF HOUSTON

HOUSTON PUBLIC WORKS

LIFT STATION RENEWAL & REPLACEMENT PROJECT

BROOKLET LIFT STATION
EXISTING STATION SECTION VIEWS
MECHANICAL DEMOLITION

WBS NUMBER	FOR CITY OF HOUSTON USE ONLY
R–000267–0173–4	HOUSTON PUBLIC WORKS ACCEPTED AND FILED 82825 CITY DRAWING NUMBER Approval Date 08/14/26 HOUSTON TX
DRAWING SCALE	
Scale 1"=2'	
CITY OF HOUSTON PM	
NUPUR KRISHNAN, PE N.K.	
C1M34	SHEET NO. 146 OF 246

0 1 2 3 ORIGINAL SCALE IN INCHES FOR REDUCED PLANS

FILE NAME:
PLOTTED ON:

P:\Cad\2024\24013 - Hatch - COH FY20 Lift Stations\CAD_DWG\LIFT STATIONS MECHANICAL DEMOLITION PLAN\2-BROOKLETLS-BROOKLETDEMOLITION 11 2025.dwg

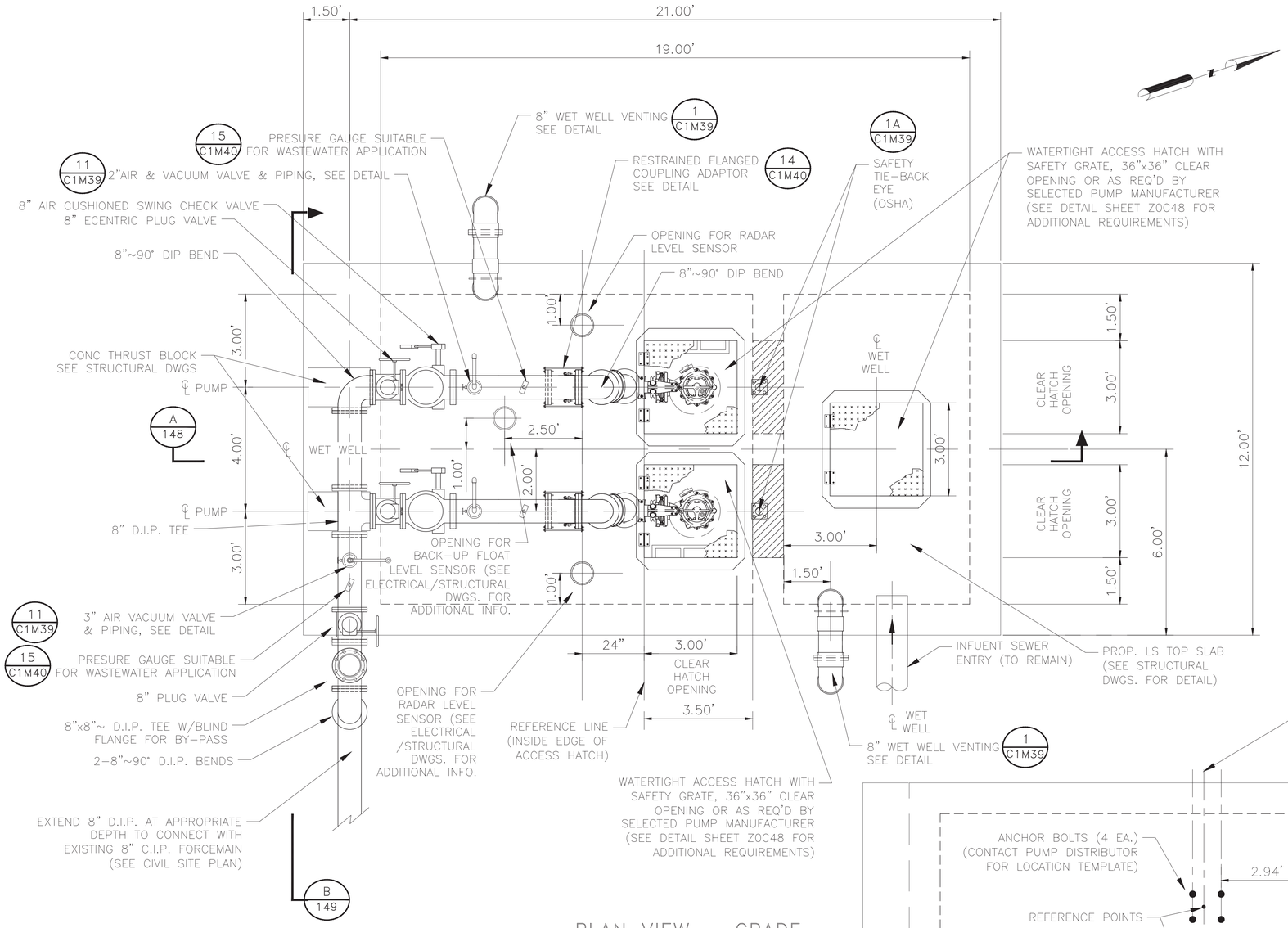

PLAN VIEW – GRADE

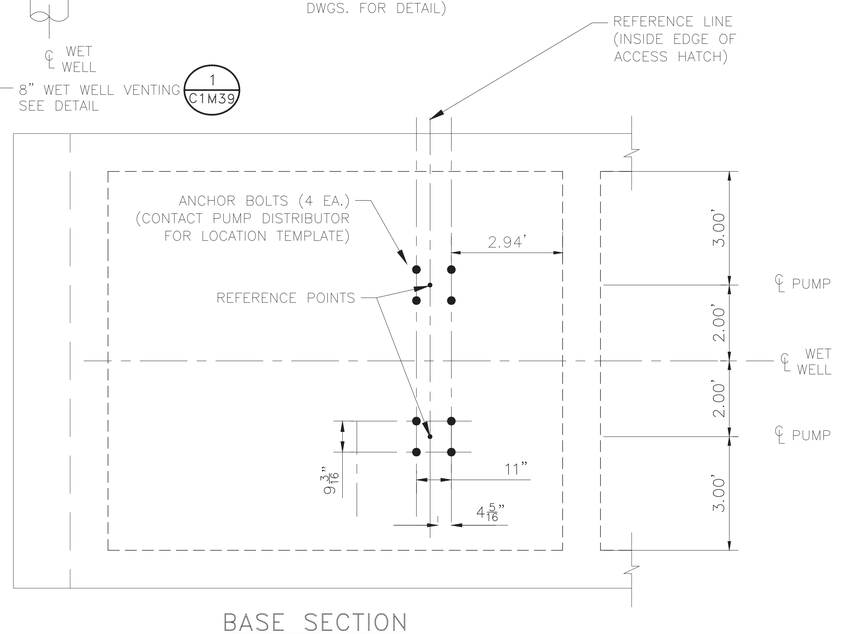

BASE SECTION

NOTES:

1. CONTRACTOR TO VERIFY DIMENSIONS REQUIRED TO INSTALL AND OPERATE VALVES.
2. SEE DETAIL AND STRUCTURAL DRAWINGS FOR DIMENSIONS AND INFORMATION NOT SHOWN.
3. CONTRACTOR TO CONFIRM SIZE AND LOCATION OF THE WET WELL HATCHES PER HATCH AND PUMP MANUFACTURER'S REQUIREMENTS.
4. PUMP AND ANCHOR BOLTS ARE TO BE ADHESIVE TYPE, AND EMBEDDED IN THE CONCRETE SLAB. CONTRACTOR TO SUBMIT DESIGN OF PUMP ANCHOR BOLTS AND PATTERN, INCLUDING CALCULATIONS, DURING SHOP DRAWING SUBMISSION.
5. CONTRACTOR TO PROVIDE ADHESIVE ANCHORS IN LIEU OF WEDGE ANCHORS FOR ALL SUBMERGED CONDITIONS AND SUBMIT DESIGN OF ANCHOR BOLTS DURING SHOP DRAWING SUBMISSION.
6. ALL PIPING IN THE WET WELL SHALL BE FLANGED. NO FLANGED COUPLING ADAPTORS, OR VICTAULIC STYLE COUPLINGS SHALL BE PERMITTED INSIDE OF THE WET WELL.
7. INSTALL PLUG VALVES TO OPEN UPWARD AND TO CLOSE TO A SEATING POSITION.
8. INSTALL CHECK VALVES SO THAT THE WEIGHT LEVER POSITION IS APPROXIMATELY 45° BELOW THE VALVE HORIZONTAL CENTER LINE IN THE CLOSE POSITION: AND APPROXIMATELY 45° ABOVE THE HORIZONTAL CENTER LINE IN THE FULL OPEN POSITION.
9. THE ACCESS HATCHES MUST BE WATERTIGHT AND PAINTED FOREST GREEN. THE SAFETY GRATING MUST BE PROVIDED WITH A SAFETY ORANGE POWDER COAT FINISH. COATING REQUIREMENTS SHALL BE IN COMPLIANCE WITH SPECIFICATION REQUIREMENTS.
10. LABEL HATCHES WITH THE CORRESPONDING PUMP NUMBER AND CHECK VALVES WITH THE CORRESPONDING VALVE NUMBER USING A 12-INCH BY 12-INCH PLATE ENGRAVED WITH 6-INCH LETTERING WELDED TO THE HATCHES AND ADHERED TO THE VALVES.
11. COATINGS ARE REQUIRED BY THE CITY OF HOUSTON ON ALL VENT PIPES. COATINGS SHALL COMPLY WITH SPECIFICATIONS 02083, PARAGRAPH 2.11.C.4 AND 09901, PARAGRAPH 2.02.G.
12. PRESSURE GAUGES SHALL BE SUITABLE FOR WASTEWATER APPLICATIONS.
13. APPLY PROTECTIVE COATINGS TO PIPES, VALVES AND FITTINGS AS APPLICABLE. LABEL PIPING WITH DIRECTIONAL FLOW ARROWS IN COMPLIANCE WITH SPECIFICATION REQUIREMENTS
14. AIR RELEASE AND AIR VACUUM VALVES TO BE PROVIDED WITH STAINLESS STEEL BODIES IN COMPLIANCE WITH SPECIFICATION REQUIREMENTS.

NO.	DATE	REVISION	APP.

AMANI ENGINEERING, INC.
11011 RICHMOND AVENUE
SUITE 700
HOUSTON, TEXAS 77024
TEL: (713) 270-5700
TBPE REG. NO. F-4528
TBPELS REG. NO. 1028200

HATCH
750 TOWN & COUNTRY BLVD.
SUITE 650
HOUSTON, TEXAS 77024
P:832-930-7670
TX FIRM NUMBER: F-314

SURVEYED BY:
AMANI ENGINEERING,INC.
FB NO. P-6357

STATE OF TEXAS
DAVID L. BROWN
48282
REGISTERED PROFESSIONAL ENGINEER
8/11/2026

CITY OF HOUSTON
HOUSTON PUBLIC WORKS

LIFT STATION RENEWAL & REPLACEMENT PROJECT

BROOKLET LIFT STATION
PROPOSED MECHANICAL PLAN VIEW
GRADE/BASE SECTION

WBS NUMBER	R-000267-0173-4
DRAWING SCALE	Scale 1"=2'
CITY OF HOUSTON PM	NUPUR KRISHNAN, PE N.K.

FOR CITY OF HOUSTON USE ONLY

HOUSTON PUBLIC WORKS
ACCEPTED AND FILED
82825
CITY DRAWING NUMBER
Approval Date 08/14/26
HOUSTON TX

C1M35 | SHEET NO. 147 OF 274

FILE NAME:
PLOTTED ON:

ORIGINAL SCALE IN INCHES FOR REDUCED PLANS
0 1 2 3

P:\Cad\2024\24013 - Hatch - COH FY20 LIft Stations\CAD_DWG\Phase II\2-Phase II BROOKLET\Phase II LS-BROOKLET.dwg

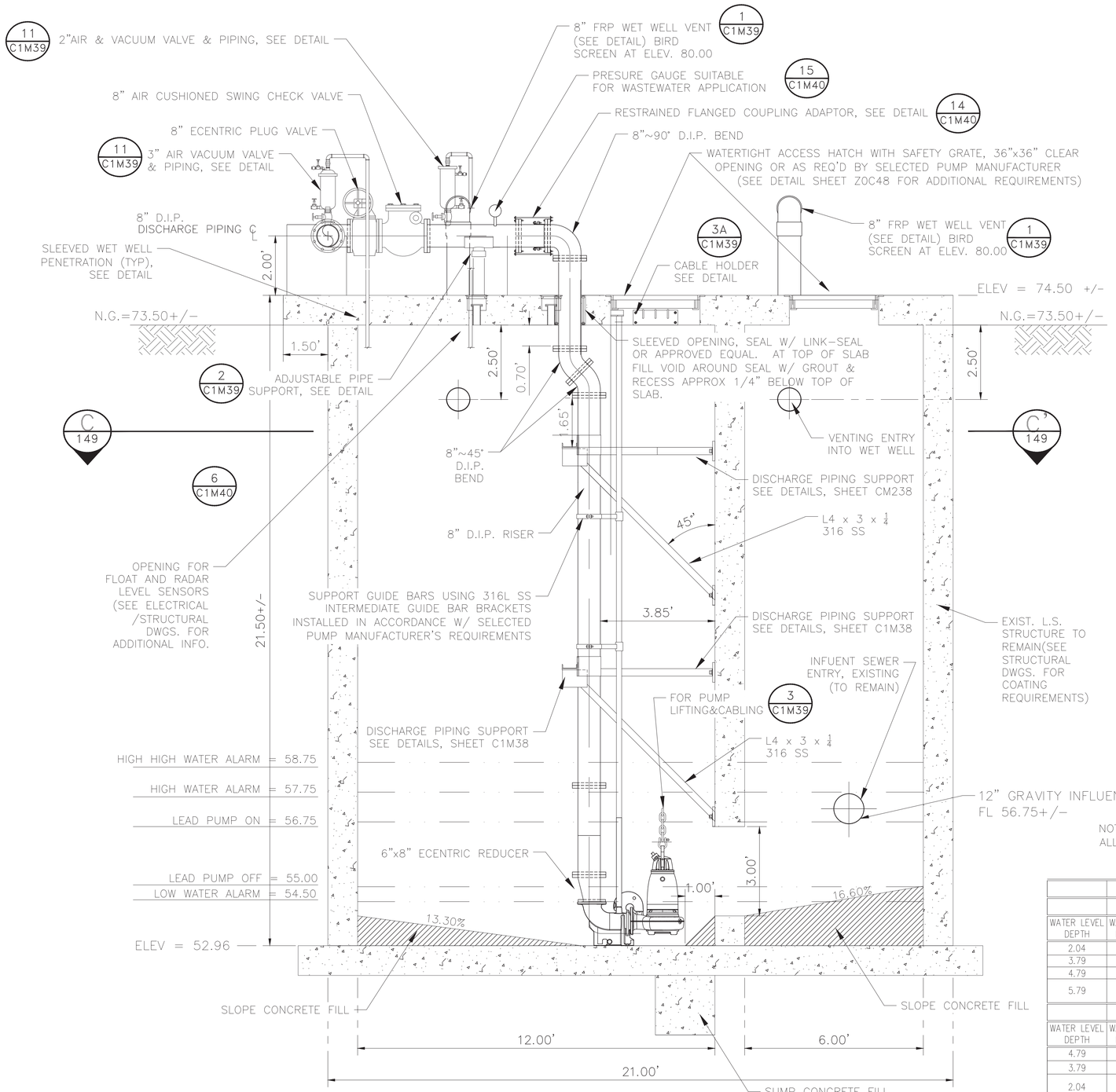

SECTION A-A

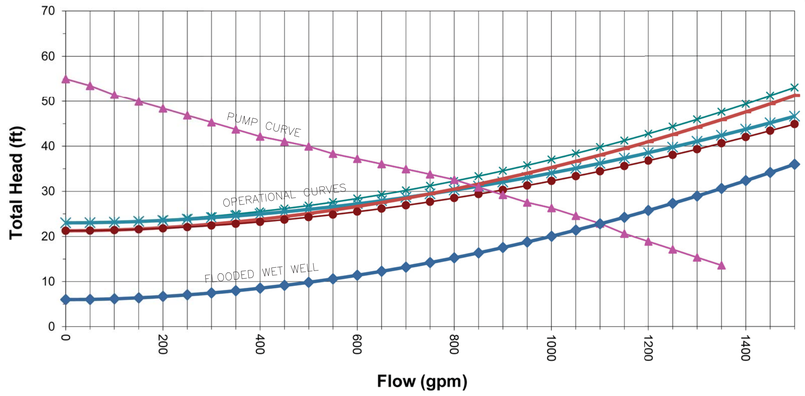

FM TH @ Max. Static, C=120
FM TX @ Max. Static, C=140
FM TH @ Min. Static, C=120
FM TH @ Min. Static, C=140
Flooded Wet Well, C=120

PUMP DATA TABLE

PUMP CHARACTERISTICS	PUMP NO. 1	PUMP NO. 2
MOTOR DATA NOMINAL SIZE (HP) MAX SPEED (RPM)	 20 1760	 20 1760
SOLIDS PASSAGE MIN SPHERE (IN)	 3	 3
CAPACITY (GPM) DESIGN RUNOUT	 825 1350	 825 1350
DISCHARGE HEAD (FT) DESIGN RUNOUT SHUT OFF	 31 12 55	 31 12 55
EFFICIENCY (%) DESIGN	 74.8	 74.8
NPSHR (FT) DESIGN RUNOUT	 22 31	 22 31
PUMP CYCLE TIME	6+	6+
CUMULATIVE CAPACITY (GPM)	825	STANDBY

NOTE: ALL PUMPS TO BE PROVIDED WITH COOLING JACKETS TO ALLOW LOWERING WET WELL LEVEL TO "ALL PUMPS OFF" SETTING

STATION OPERATION TABLES

	RISING LEVEL CYCLE		
WATER LEVEL DEPTH	WATER LEVEL ELEVATION	ACTION	PUMP(S) IN OPERATION
2.04	55.00	PUMPS OFF LEVEL – NO ACTION	ALL PUMPS ARE OFF
3.79	56.75	LEAD PUMP TURNS ON	LEAD PUMP ON (FIRM PUMP)
4.79	57.75	HIGH WATER ALARM ON	HIGH WATER ALARM SOUND
5.79	58.75	HIGH HIGH WATER ALARM (FLOAT ON LEVEL)	LEAD PUMP ON (FLOATS)
	FALLING LEVEL CYCLE		
WATER LEVEL DEPTH	WATER LEVEL ELEVATION	ACTION	PUMP(S) IN OPERATION
4.79	57.75	FLOAT OFF LEVEL	LEAD PUMP OFF (FLOATS)
3.79	56.75	HIGH WATER LEVEL ALARM OFF	LEAD PUMP ON
2.04	55.00	LEAD PUMP TURNS OFF	ALL PUMPS OFF – STANDBY PUMP SWITCHES TO LEAD PUMP
1.54	54.50	LOW LEVEL ALARM	–

NO.	DATE	REVISION	APP.

AMANI ENGINEERING, INC.
11011 RICHMOND AVENUE
SUITE 700
HOUSTON, TEXAS 77024
TEL: (713) 270-5700
TBPE REG. NO. F-4528
TBPELS REG. NO. 1028200

HATCH
750 TOWN & COUNTRY BLVD.
SUITE 650
HOUSTON, TEXAS 77024
P:832-930-7670
TX FIRM NUMBER: F-314

SURVEYED BY:
AMANI ENGINEERING,INC.
FB NO. P-6357

STATE OF TEXAS
DAVID L. BROWN
48282
REGISTERED
PROFESSIONAL ENGINEER
8/11/2026

CITY OF HOUSTON
HOUSTON PUBLIC WORKS

LIFT STATION RENEWAL & REPLACEMENT PROJECT

BROOKLET LIFT STATION
PROPOSED ELEVATION SECTION A-A'

WBS NUMBER	R-000267-0173-4
DRAWING SCALE	Scale 1"=2'
CITY OF HOUSTON PM	NUPUR KRISHNAN, PE N.K.

FOR CITY OF HOUSTON USE ONLY

HOUSTON PUBLIC WORKS
ACCEPTED AND FILED
82825
CITY DRAWING NUMBER
Approval Date 08/14/26
HOUSTON TX

C1M36 | SHEET NO. 148 OF 274

FILE NAME:
PLOTTED ON:

0 1 2 3 ORIGINAL SCALE IN INCHES FOR REDUCED PLANS

P:\Cad\2024\24013 - Hatch - COH FY20 Lift Stations\CAD_DWG\Phase II\2-Phase II BROOKLET\Phase II LS-BROOKLET.dwg

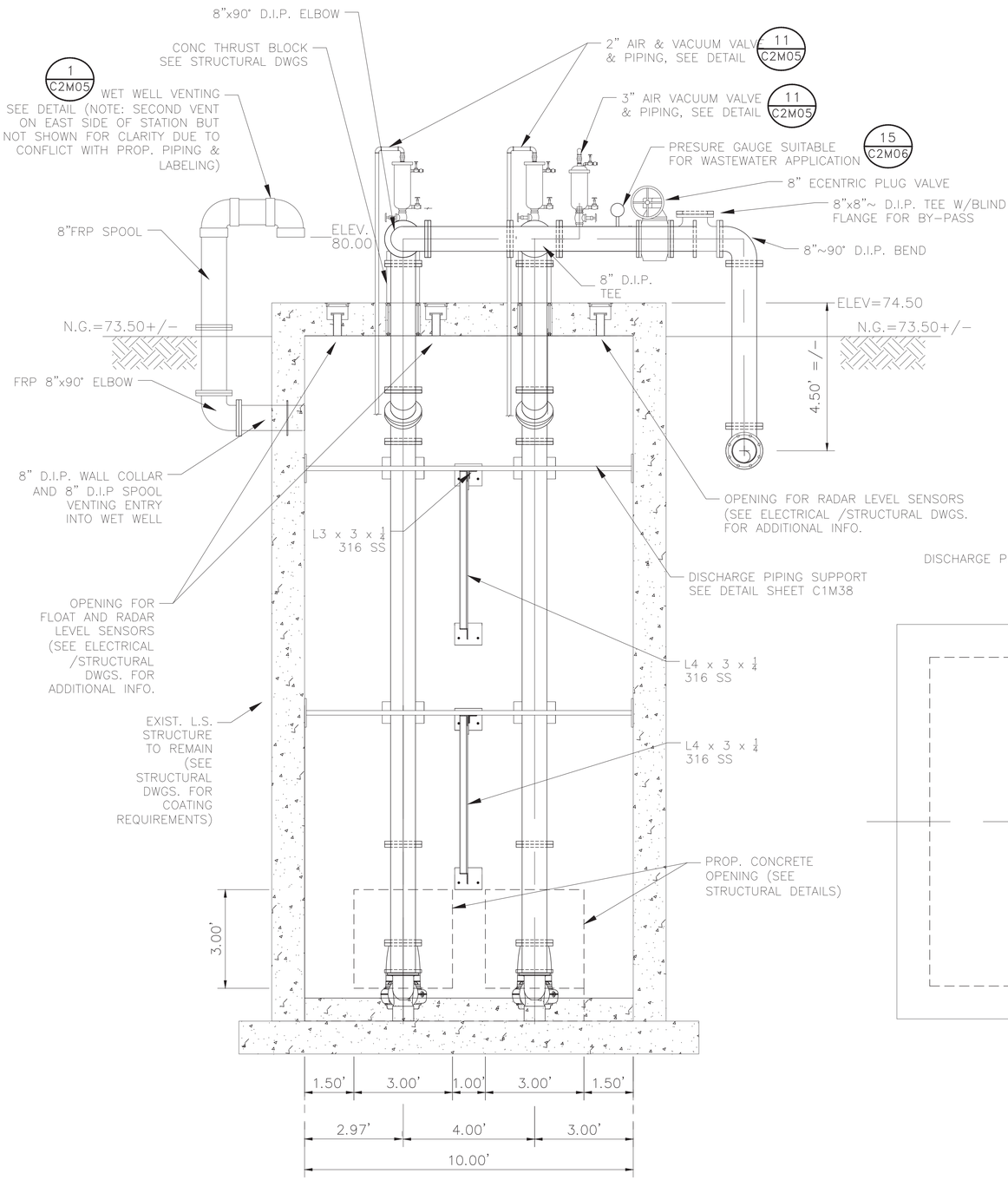

SECTION B–B

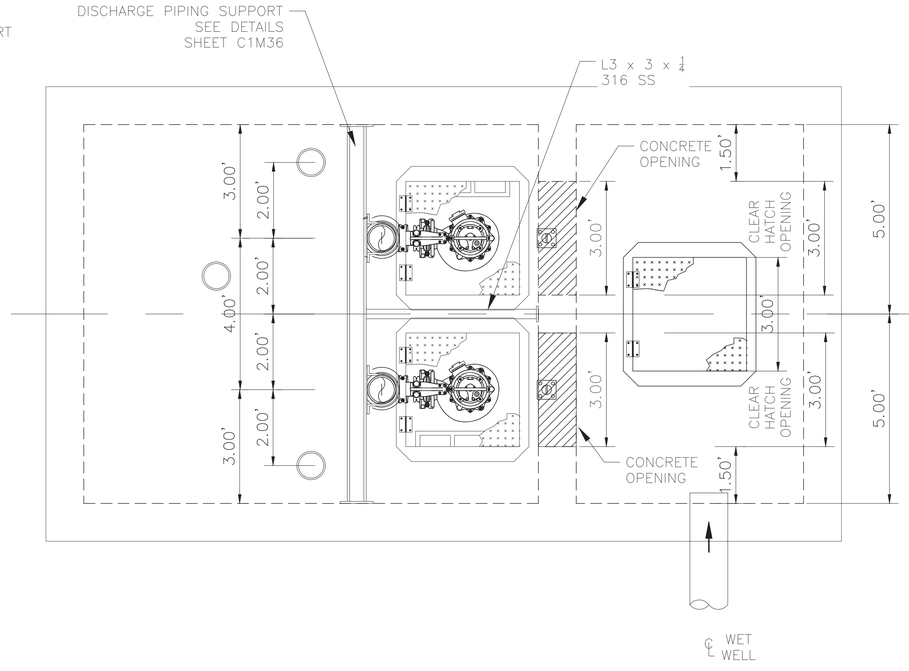

SECTION C–C

NOTES:

1. CONTRACTOR TO VERIFY DIMENSIONS REQUIRED TO INSTALL AND OPERATE VALVES.
2. SEE DETAIL AND STRUCTURAL DRAWINGS FOR DIMENSIONS AND INFORMATION NOT SHOWN.
3. CONTRACTOR TO CONFIRM SIZE AND LOCATION OF THE WET WELL HATCHES PER HATCH AND PUMP MANUFACTURER'S REQUIREMENTS.
4. PUMP AND ANCHOR BOLTS ARE TO BE ADHESIVE TYPE, AND EMBEDDED IN THE CONCRETE SLAB. CONTRACTOR TO SUBMIT DESIGN OF PUMP ANCHOR BOLTS AND PATTERN, INCLUDING CALCULATIONS, DURING SHOP DRAWING SUBMISSION.
5. CONTRACTOR TO PROVIDE ADHESIVE ANCHORS IN LIEU OF WEDGE ANCHORS FOR ALL SUBMERGED CONDITIONS AND SUBMIT DESIGN OF ANCHOR BOLTS DURING SHOP DRAWING SUBMISSION.
6. ALL PIPING IN THE WET WELL SHALL BE FLANGED. NO FLANGED COUPLING ADAPTORS, OR VICTAULIC STYLE COUPLINGS SHALL BE PERMITTED INSIDE OF THE WET WELL.
7. INSTALL PLUG VALVES TO OPEN UPWARD AND TO CLOSE TO A SEATING POSITION.
8. INSTALL CHECK VALVES SO THAT THE WEIGHT LEVER POSITION IS APPROXIMATELY 45° BELOW THE VALVE HORIZONTAL CENTER LINE IN THE CLOSE POSITION: AND APPROXIMATELY 45° ABOVE THE HORIZONTAL CENTER LINE IN THE FULL OPEN POSITION.
9. THE ACCESS HATCHES MUST BE WATERTIGHT AND PAINTED FOREST GREEN. THE SAFETY GRATING MUST BE PROVIDED WITH A SAFETY ORANGE POWDER COAT FINISH. COATING REQUIREMENTS SHALL BE IN COMPLIANCE WITH SPECIFICATION REQUIREMENTS.
10. LABEL HATCHES WITH THE CORRESPONDING PUMP NUMBER AND CHECK VALVES WITH THE CORRESPONDING VALVE NUMBER USING A 12–INCH BY 12–INCH PLATE ENGRAVED WITH 6–INCH LETTERING WELDED TO THE HATCHES AND ADHERED TO THE VALVES.
11. UV PROTECTIVE COATINGS ARE REQUIRED BY THE CITY OF HOUSTON ON ALL VENT PIPES.
12. PRESSURE GAUGES SHALL BE SUITABLE FOR WASTEWATER APPLICATIONS.
13. APPLY PROTECTIVE COATINGS TO PIPES, VALVES AND FITTINGS AS APPLICABLE. LABEL PIPING WITH DIRECTIONAL FLOW ARROWS IN COMPLIANCE WITH SPECIFICATION REQUIREMENTS
14. AIR RELEASE AND AIR VACUUM VALVES TO BE PROVIDED WITH STAINLESS STEEL BODIES IN COMPLIANCE WITH SPECIFICATION REQUIREMENTS.

NO.	DATE	REVISION	APP.

AMANI ENGINEERING, INC.
11011 RICHMOND AVENUE
SUITE 700
HOUSTON, TEXAS 77024
TEL: (713) 270-5700
TBPE REG. NO. F-4528
TBPELS REG. NO. 1028200

HATCH
750 TOWN & COUNTRY BLVD.
SUITE 650
HOUSTON, TEXAS 77024
P:832-930-7670
TX FIRM NUMBER: F-314

SURVEYED BY:
AMANI ENGINEERING,INC.
FB NO. P-6357

STATE OF TEXAS
DAVID L. BROWN
48282
REGISTERED
PROFESSIONAL
LAND SURVEYOR
8/11/2026

CITY OF HOUSTON
HOUSTON PUBLIC WORKS

LIFT STATION RENEWAL & REPLACEMENT PROJECT

BROOKLET LIFT STATION
PROPOSED ELEVATION SECTION B–B'
PROPOSED PLAN VIEW SECTION C–C'

WBS NUMBER	FOR CITY OF HOUSTON USE ONLY
R–000267–0173–4	HOUSTON PUBLIC WORKS ACCEPTED AND FILED 82825 CITY DRAWING NUMBER Approval Date 08/14/26 HOUSTON TX
DRAWING SCALE	
Scale 1"=2'	
CITY OF HOUSTON PM	
NUPUR KRISHNAN, PE N.K.	
C1M37	SHEET NO. 149 OF 274

FILE NAME:
PLOTTED ON:

0 1 2 3 ORIGINAL SCALE IN INCHES FOR REDUCED PLANS

P:\Coord\2024\24013 - Hatch - COH FY20 Lift Stations\CAD_DWGS\Phase IV\2-Phase II BROOKLET\Phase II LS-BROOKLET.dwg

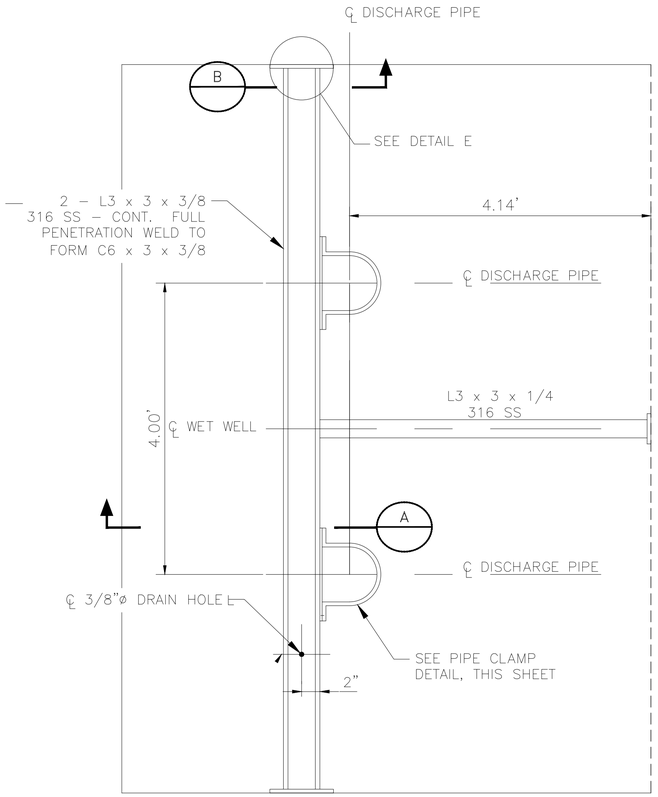

TYP DISCHARGE PIPING SUPPORT PLAN FOR 2 PUMPS

N.T.S.

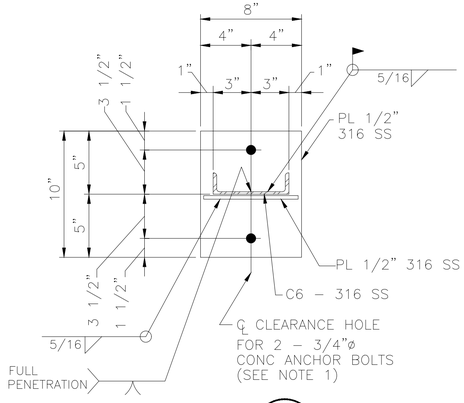

SECTION B / C1M38

N.T.S.

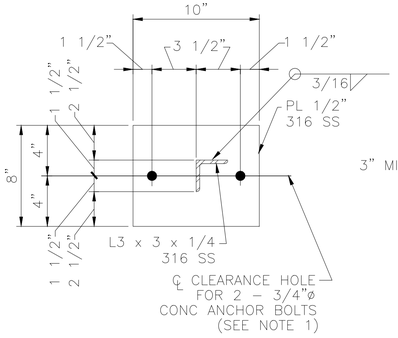

SECTION C / C1M38

N.T.S.

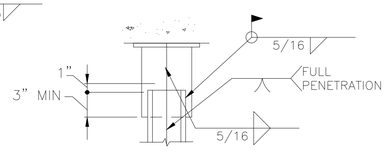

DETAIL E

N.T.S.

NOTES:

1. CONCRETE ANCHOR BOLTS SHALL HAVE 6" MINIMUM EMBEDMENT AND SHALL BE TYPE 316 STAINLESS STEEL, PER SPECIFICATIONS.
2. SEE STATION AND STRUCTURAL DRAWINGS FOR DIMENSIONS AND INFORMATION NOT SHOWN.
3. DRILL 3/8"ø HOLES, 1" OFF ℄ OF C6 AT MIDSPAN BETWEEN LATERAL PIPE SUPPORTS TO ALLOW FOR DRAINAGE. 3 HOLES PER CHANNEL WHERE 2 LATERAL SUPPORTS REQUIRED; 2 HOLES PER CHANNEL WHERE 1 LATERAL SUPPORT REQUIRED.
4. SET 1/4" NEOPRENE GASKET ON WALL SURFACE IN SIKA 1A (OR EQUAL) SEALANT.

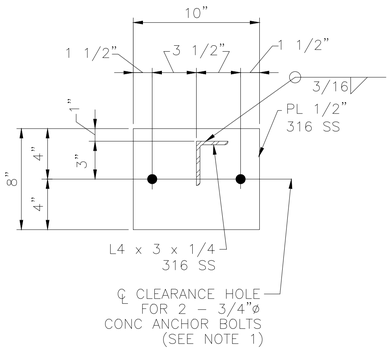

SECTION D / C1M38

N.T.S.

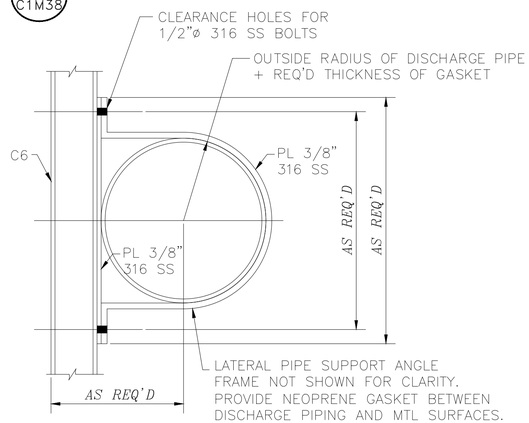

PIPE CLAMP DETAIL

N.T.S.

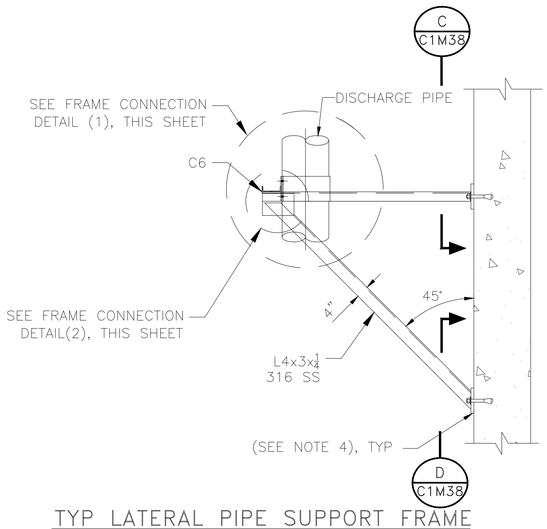

TYP LATERAL PIPE SUPPORT FRAME DETAIL(A) N.T.S.

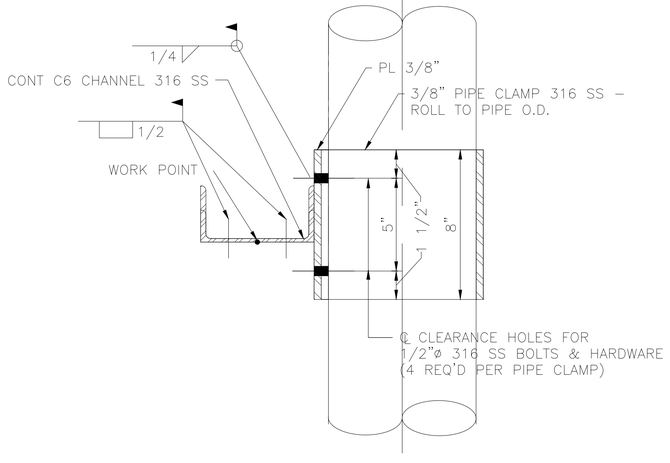

FRAME CONNECTION DETAIL(1) N.T.S.

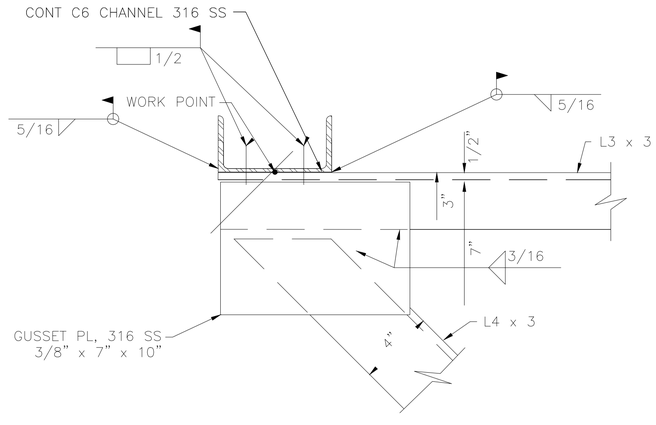

FRAME CONNECTION DETAIL(2) N.T.S.

NO.	DATE	REVISION	APP.

AMANI ENGINEERING, INC.
11011 RICHMOND AVENUE
SUITE 700
HOUSTON, TEXAS 77024
TEL: (713) 270-5700
TBPE REG. NO. F-4528
TBPELS REG. NO. 1028200

HATCH
750 TOWN & COUNTRY BLVD.
SUITE 650
HOUSTON, TEXAS 77024
P:832-930-7670
TX FIRM NUMBER: F-314

SURVEYED BY:
AMANI ENGINEERING,INC.
FB NO. P-6357

STATE OF TEXAS
DAVID L. BROWN
48282
REGISTERED
PROFESSIONAL
LAND SURVEYOR
8/11/2026

CITY OF HOUSTON

HOUSTON PUBLIC WORKS

LIFT STATION RENEWAL & REPLACEMENT PROJECT

BROOKLET LIFT STATION
PROPOSED MECHANICAL DISCHARGE PIPING SUPPORT DETAILS

WBS NUMBER	FOR CITY OF HOUSTON USE ONLY
R-000267-0173-4	HOUSTON PUBLIC WORKS ACCEPTED AND FILED 82825 CITY DRAWING NUMBER Approval Date 08/14/26 HOUSTON TX
DRAWING SCALE	
Scale N.T.S.	
CITY OF HOUSTON PM	
NUPUR KRISHNAN, PE N.K.	
SHEET NO. 150 OF 274	

C1M38

0 1 2 3 ORIGINAL SCALE IN INCHES FOR REDUCED PLANS

FILE NAME:
PLOTTED ON:

P:\Cad\2024\24013 - Hatch - COH FY20 Lift Stations\CAD_DWG\Phase IV\2-Phase II BROOKLET\Phase II LS-BROOKLET.dwg

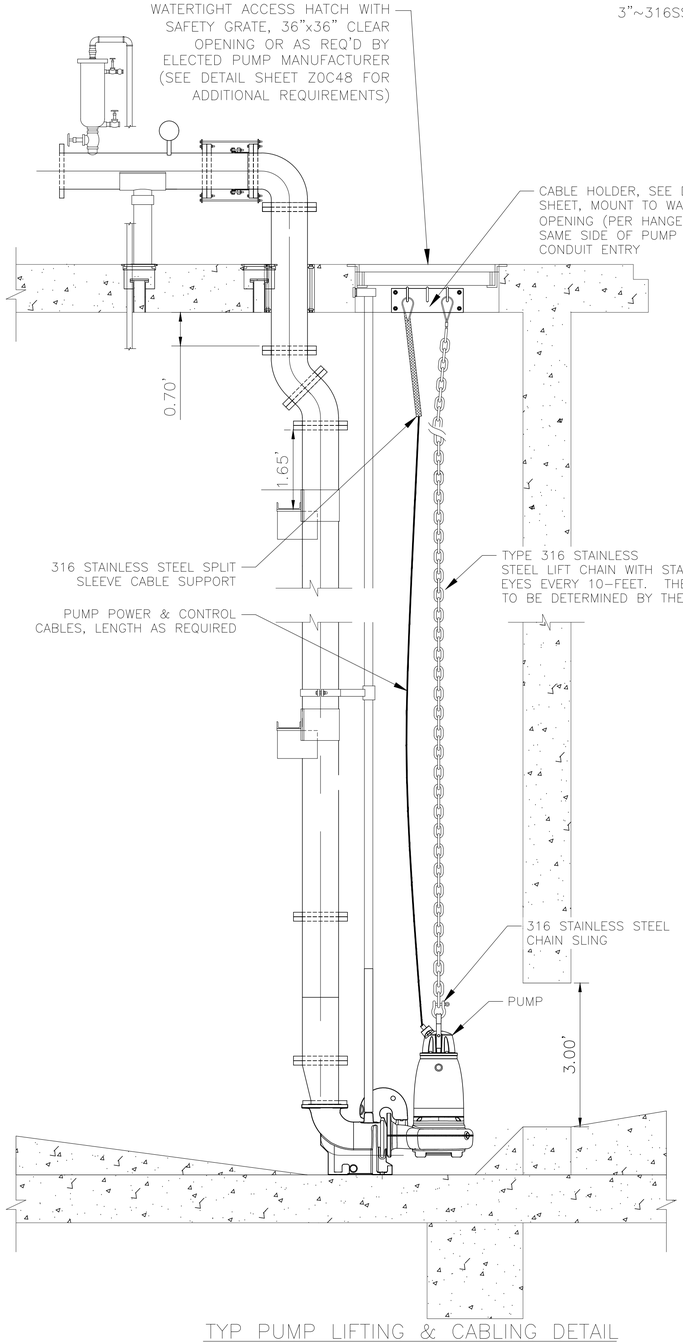

TYP PUMP LIFTING & CABLING DETAIL

DETAIL 3 / C1M39 — N.T.S.

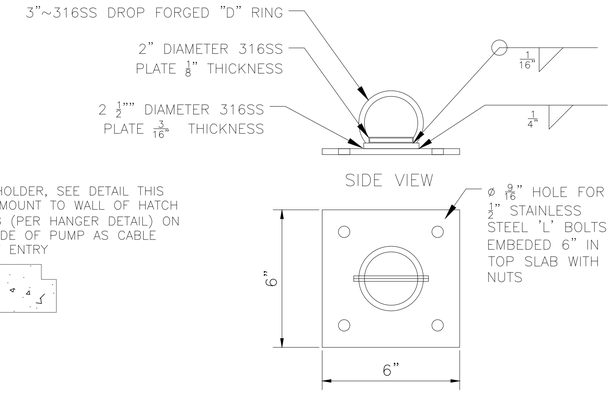

CB SERIES FALL PROTECTION CB-1B BOLT ANCHORED

DETAIL 1A / C1M39 — N.T.S.

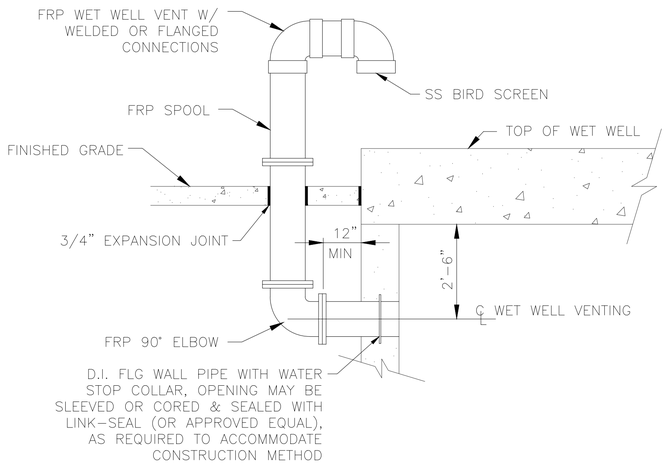

TYPICAL HIGH PROFILE WET WELL VENTING INSTALLATION

DETAIL 1 / C1M39 — N.T.S.

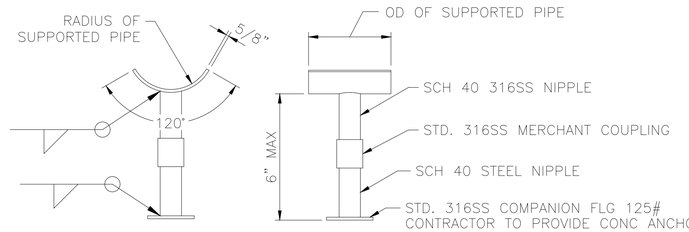

TYP ADJUSTABLE PIPE SUPPORT

DETAIL 2 / C1M39 — N.T.S.

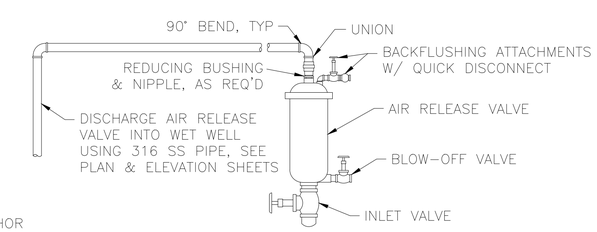

NOTE: PROVIDE STAINLESS STEEL VALVE BODY AND FITTINGS AS MAY BE REQUIRED BY SPECIFICATIONS

TYPICAL AIR RELEASE VALVE ASSY

DETAIL 10 / C1M39 — N.T.S.

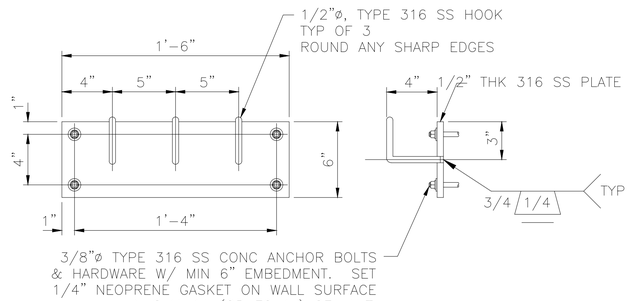

TYPICAL CABLE HOLDER ASSY

DETAIL 3A / C1M39 — N.T.S.

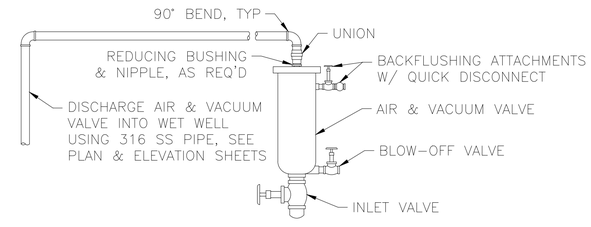

NOTE: PROVIDE STAINLESS STEEL VALVE BODY AND FITTINGS AS MAY BE REQUIRED BY SPECIFICATIONS

TYPICAL AIR & VACUUM VALVE ASSY

DETAIL 11 / C1M39 — N.T.S.

NO.	DATE	REVISION	APP.

AMANI ENGINEERING, INC.
11011 RICHMOND AVENUE
SUITE 700
HOUSTON, TEXAS 77024
TEL: (713) 270-5700
TBPE REG. NO. F-4528
TBPELS REG. NO. 1028200

HATCH
750 TOWN & COUNTRY BLVD.
SUITE 650
HOUSTON, TEXAS 77024
P:832-930-7670
TX FIRM NUMBER: F-314

SURVEYED BY:
AMANI ENGINEERING,INC.
FB NO. P-6357

STATE OF TEXAS
DAVID L. BROWN
48282
REGISTERED PROFESSIONAL ENGINEER
8/11/2026

CITY OF HOUSTON
HOUSTON PUBLIC WORKS

LIFT STATION RENEWAL & REPLACEMENT PROJECT

BROOKLET LIFT STATION
PROPOSED MECHANICAL DETAILS

WBS NUMBER	FOR CITY OF HOUSTON USE ONLY
R-000267-0173-4	HOUSTON PUBLIC WORKS ACCEPTED AND FILED 82825 CITY DRAWING NUMBER Approval Date 08/14/26 HOUSTON TX
DRAWING SCALE	
Scale N.T.S.	
CITY OF HOUSTON PM	
NUPUR KRISHNAN, PE N.K.	
C1M39	SHEET NO. 151 OF 274

FILE NAME:
PLOTTED ON:

0 1 2 3 ORIGINAL SCALE IN INCHES FOR REDUCED PLANS

P:\Code\2024\24013 - Hatch - COH FY26 Lift Stations\CAD_DWG\Phase IV\2-Phase II BROOKLET\Phase II LS-BROOKLET.dwg

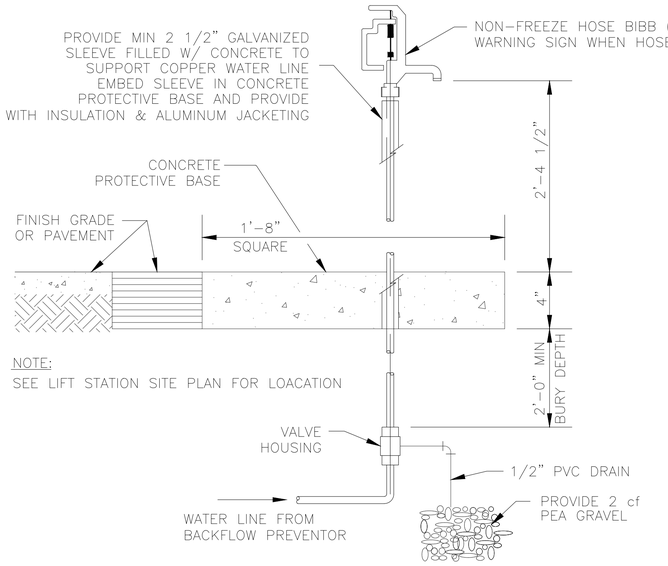

TYP NON-FREEZE HOSE BIBB DETAIL

DETAIL 12 C1M40
N.T.S.

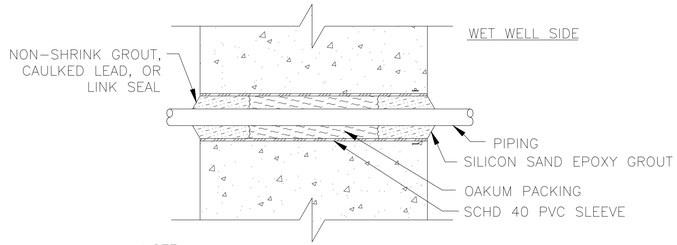

NOTE:
SLEEVED WET WELL PENETRATION IS NOT TO BE USED FOR CONDUIT INSTALLATION. SEE ELECTRICAL DETAIL SHEETS FOR CONDUIT PENETRATIONS.

SLEEVED WET WELL PENETRATION FOR PIPING 4"ø & SMALLER

DETAIL 6 C1M40
N.T.S.

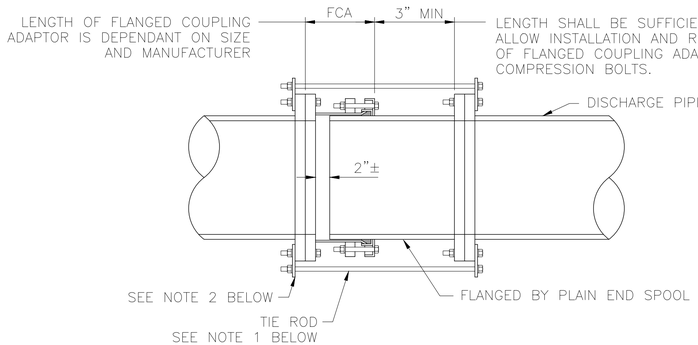

NOTES:

1. PROVIDE A NUMBER OF TIE RODS EQUAL TO 1/2 THE NUMBER OF FLANGE BOLTS. EVENLY SPACE INSTALLATION OF TIE RODS. DIAMETER OF TIE RODS TO BE EQUAL TO THE DIAMETER OF FLANGE BOLTS. LENGTH OF TIE RODS TO BE DETERMINED BY CONTRACTOR BASED ON SIZE AND MANUFACTURER OF FLANGED COUPLING ADAPTOR AND FINAL LENGTH OF SPOOL PIECE.
2. PROVIDE 316 SS TAB FOR ATTACHMENT OF TIE RODS. SIZE TO BE DETERMINED BY CONTRACTOR.
3. CONTRACTOR TO SUBMIT DETAILS DURING SHOP DRAWING SUBMISSION.
4. ALL HARDWARE SHALL BE 316 STAINLESS STEEL. TIE RODS SHOULD BE THREADED.
5. THIS RESTRAINT DOES NOT REPLACE THRUST BLOCKS TO BE PROVIDED AT OTHER LOCATIONS.

TYP FLANGED COUPLING ADAPTOR RESTRAINT DETAIL

DETAIL 14 C1M40
N.T.S.

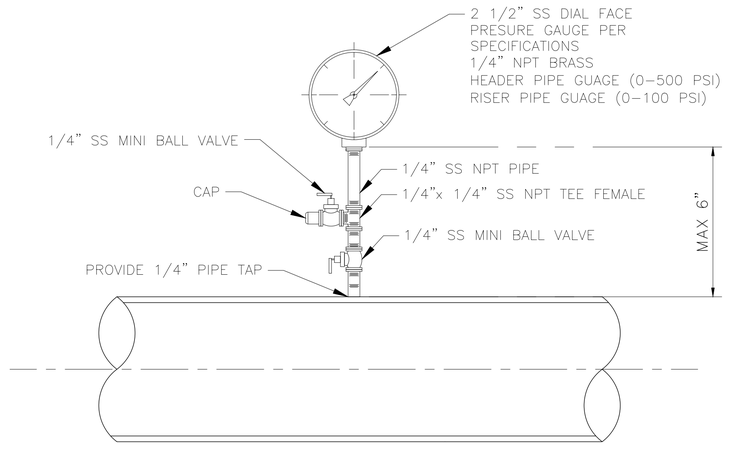

NOTE: ALL FITTINGS SHALL BE STAINLESS STEEL (316)

PRESSURE GAUGE DETAIL

DETAIL 15 C1M40
N.T.S.

NO.	DATE	REVISION	APP.

AMANI ENGINEERING, INC.
11011 RICHMOND AVENUE
SUITE 700
HOUSTON, TEXAS 77024
TEL: (713) 270-5700
TBPE REG. NO. F-4528
TBPELS REG. NO. 1028200

HATCH
750 TOWN & COUNTRY BLVD.
SUITE 650
HOUSTON, TEXAS 77024
P:832-930-7670
TX FIRM NUMBER: F-314

SURVEYED BY:
AMANI ENGINEERING,INC.
FB NO. P-6357

STATE OF TEXAS
DAVID L. BROWN
48282
REGISTERED
PROFESSIONAL
LAND SURVEYOR
8/11/2026

CITY OF HOUSTON
HOUSTON PUBLIC WORKS

LIFT STATION RENEWAL & REPLACEMENT PROJECT

BROOKLET LIFT STATION
PROPOSED MECHANICAL DETAILS

WBS NUMBER	FOR CITY OF HOUSTON USE ONLY
R-000267-0173-4	
DRAWING SCALE	
Scale N.T.S.	
CITY OF HOUSTON PM	
NUPUR KRISHNAN, PE N.K.	
SHEET NO. 152 OF 274	

HOUSTON PUBLIC WORKS
ACCEPTED AND FILED
82825
CITY DRAWING NUMBER
Approval Date 08/14/26
HOUSTON TX

C1M40

FILE NAME:
PLOTTED ON:

ORIGINAL SCALE IN INCHES
FOR REDUCED PLANS
0 1 2 3

P:\Cords\2024\24013 - Hatch - COH FY20 Lift Stations\CAD_DWG\Phase IV\2-Phase II BROOKLET\Phase II LS-BROOKLET.dwg

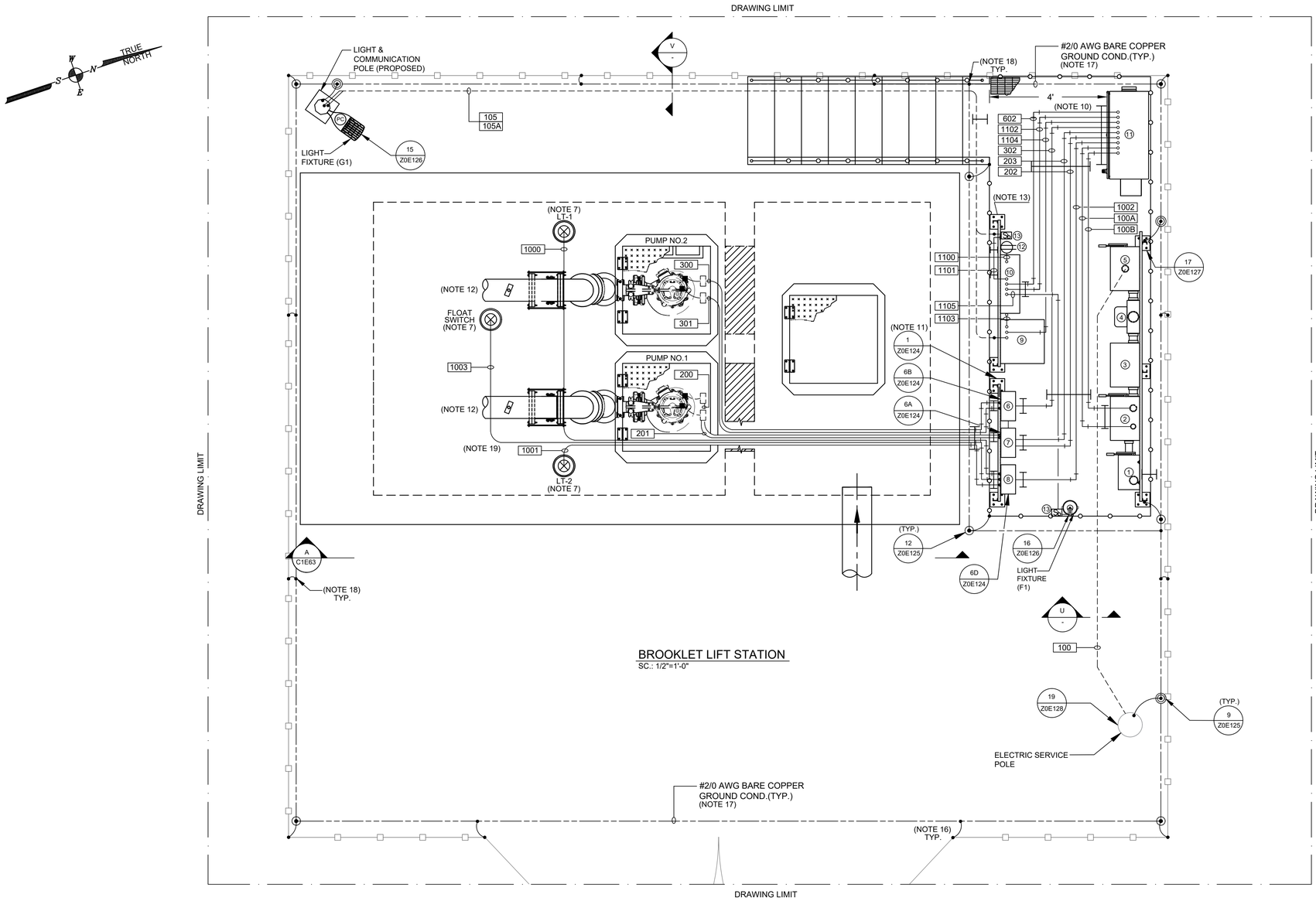

BROOKLET LIFT STATION
SC.: 1/2"=1'-0"

No.	DESCRIPTION
1	GENERATOR FUSED DISCONNECT
2	MANUAL TRANSFER SWITCH
3	SERVICE DISCONNECT SWITCH
4	UTILITY METER
5	METER DISCONNECT SWITCH
6	PUMP NO.2 J-BOX
7	PUMP NO.1 J-BOX
8	LEVEL TRANSMITTER J-BOX
9	PPU-AC PANEL
10	LIGHTING PANELBOARD
11	POWER & CONTROL CABINET
12	WEATHER PROOF GFI
13	WEATHER PROOF LIGHTING SWITCH

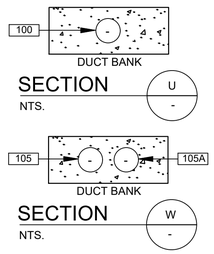

NOTES:

1. GROUNDING SHALL BE PER N.E.C. MINIMUM REQUIREMENTS.
2. THE ELECTRICAL INSTALLATION WITHIN THE WET WELL SHALL BE EXPLOSION PROOF IN ACCORDANCE WITH ARTICLE 510 OF THE NEC FOR CLASS I, DIVISION 1, GROUP C & D.
3. WHERE JUNCTION BOXES ARE SHOWN, THEY SHALL BE USED FOR PULLING OR TERMINATION PURPOSES ONLY. SPLICES WILL NOT BE ALLOWED EXCEPT AS PROVIDED BY NOTE 4 AND AT LIGHTING AND RECEPTACLE TERMINATIONS.
4. FOR MOTOR FEEDER AND CONTROL CABLES, INSTALL TYPE CSBE CABLE SEALING FITTING AT JUNCTION BOX ENTRANCE AND EXPLOSION PROOF SEAL IN CONDUITS TO CONTROL BUILDING OR PANEL.
5. TERMINATE PUMP POWER & CONTROL CONDUITS WITH CSBE SEAL. ATTACH STAINLESS STEEL SPLIT SLEEVE CABLE SUPPORT ON EACH POWER AND CONTROL CABLE.
6. ALL PUMP POWER AND CONTROL CABLE LEADS MUST BE THE SAME LENGTH REGARDLESS OF PUMP LOCATION FROM TERMINAL/JUNCTION BOX.
7. LEVEL TRANSMITTERS AND FLOAT SWITCH SHOWN IN APPROXIMATE LOCATION. ACTUAL LOCATION SHALL FIELD VERIFY.
8. INSIDE WET WELL IS CLASSIFIED AS CLASS I, DIVISION 1. OUTSIDE WET WELL WITHIN 5 FEET OF WET WELL OPENINGS ARE CLASSIFIED AS CLASS I, DIVISION 2.
9. NEW INSTRUMENT TO BE INSTALLED IN THE SAME AREA AS INSTRUMENT REMOVED.
10. CONDUITS INSTALLED UNDER THE PLATFORM AND FIXED TO UNISTRUT SUPPORT.
11. THE JUNCTION BOX RACK MUST BE AT LEAST 4' WIDE.
12. FOR MECHANICAL PLAN VIEW, SEE DRAWING No. C1M35.
13. RACK MUST BE AT LEAST 5' WIDE.
14. BELOW SURFACE CONDUIT RUNS SHALL HAVE TOTAL BENDS EQUAL TO OR LESS THAN 270 DEGREES. INSTALL HANDHOLES AT GRADE LEVEL WHERE NECESSARY.
15. GROUND FENCE USING #2/0 BARE COPPER CONDUCTOR AT FOUR CORNERS AND INTERMEDIATE POSTS AT INTERVALS NOT TO EXCEED 50 FEET.
16. PROVIDE FLEXIBLE BONDING JUMPERS ACROSS ALL GATE HINGES TO MAINTAIN CONTINUOUS GROUNDING.
17. GROUNDING LOOP SHALL BE BURIED 24" BELOW FINISHED GRADE.
18. EXOTHERMIC (THERMOWELD) CONNECTION OF #2/0 BARE COPPER GROUND CONDUCTOR TO REBAR.
19. CONDUIT WILL BE EMBEDDED IN THE TOP CONCRETE SLAB, NOT ON TOP OR BELOW THE SLAB.

NO.	DATE	REVISION	APP.

HATCH
750 TOWN & COUNTRY BLVD
SUITE 650
HOUSTON, TX 77024
P: 832-930-7670
TX FIRM NUMBER: F-314

SURVEYED BY:
AMANI ENGINEERING, INC.
FB NO. P-6357

STATE OF TEXAS
GUY N SEVERN
105809
LICENSED
PROFESSIONAL ENGINEER
7/21/2026

CITY OF HOUSTON
HOUSTON PUBLIC WORKS

LIFT STATION RENEWAL & REPLACEMENT PROJECT
BROOKLET LS

ELECTRICAL SITE PLAN

WBS NUMBER	R-000267-0173-4
DRAWING SCALE	1/2"=1'-0"
CITY OF HOUSTON PM	NUPUR KRISHNAN P.E. N.K.
SHEET NO. 153 OF 274	C1E62

FOR CITY OF HOUSTON USE ONLY

HOUSTON PUBLIC WORKS
ACCEPTED AND FILED
82825
CITY DRAWING NUMBER
Approval Date 08/14/26
HOUSTON TX

PLOTTED: 8/10/2026 6:20 AM
PLOT STYLE: COH.ctb
FILE PATH: \\wusppplot01\d$\Global ProjectWise Plotting - WUS\Queue 1\queue1.dwg

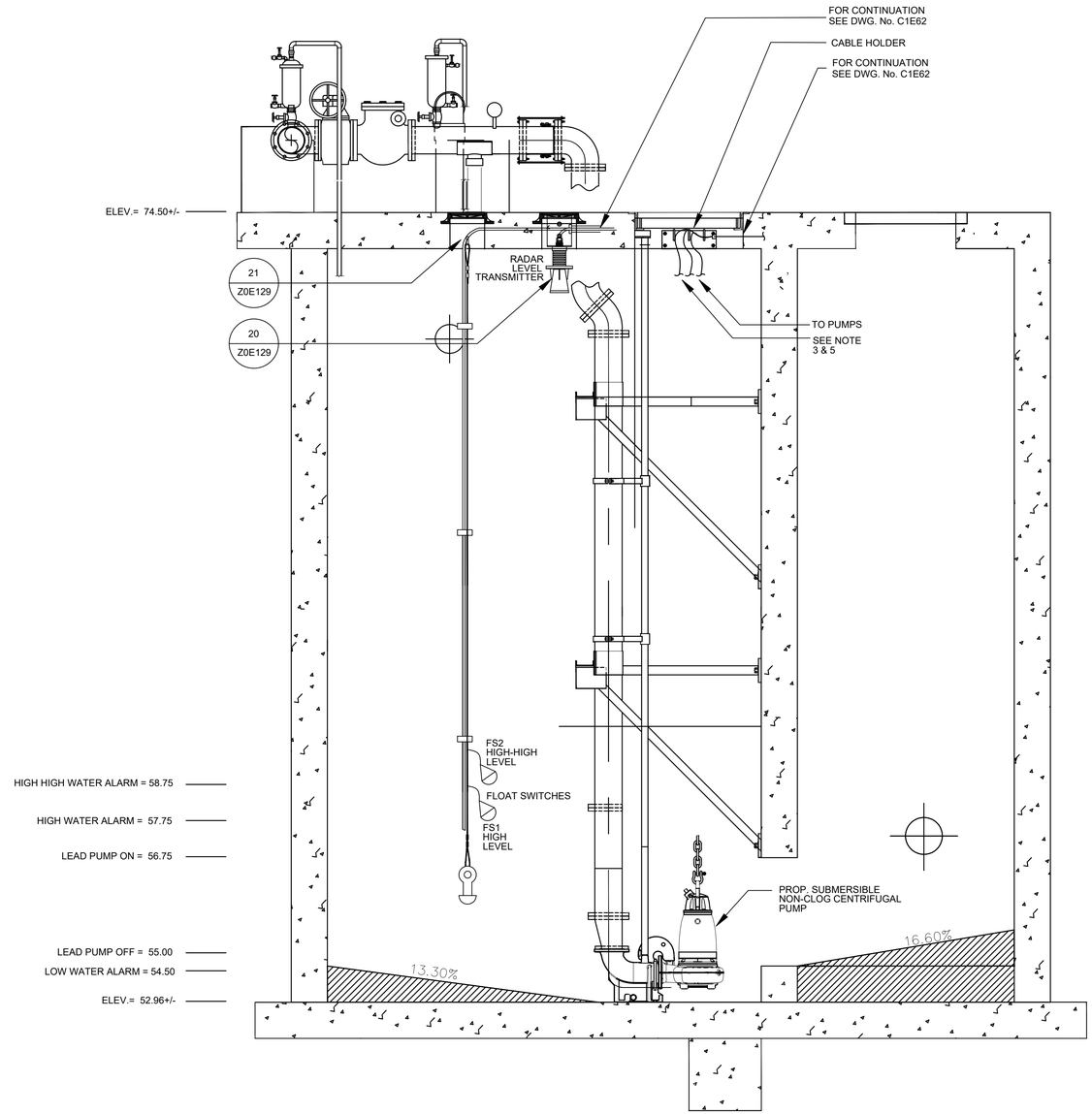

BROOKLET - LIFT STATION

A / - ELEVATION

SC.: 1/2"=1'-0"

NOTES:

1. GROUNDING SHALL BE PER N.E.C. MINIMUM REQUIREMENTS.
2. THE ELECTRICAL INSTALLATION WITHIN THE WET WELL SHALL BE EXPLOSION PROOF IN ACCORDANCE WITH ARTICLE 510 OF THE NEC FOR CLASS I, DIVISION I, GROUP C & D.
3. ALL PUMP POWER AND CONTROL CABLE LEADS MUST BE THE SAME LENGTH REGARDLESS OF PUMP LOCATION FROM TERMINAL/JUNCTION BOX.
4. FOR MOTOR FEEDER AND CONTROL CABLES. INSTALL TYPE CSBE CABLE SEALING FITTING AT JUNCTION BOX ENTRANCE AND EXPLOSION PROOF SEAL IN CONDUITS TO POWER & CONTROL PANEL.
5. TERMINATE PUMP POWER & CONTROL CONDUITS WITH CSBE SEAL. ATTACH STAINLESS STEEL SPLIT SLEEVE CABLE SUPPORT ON EACH POWER AND CONTROL CABLE.
6. INSTRUMENTS SHOWN IN APPROXIMATE LOCATION. ACTUAL LOCATION SHALL BE ESTABLISHED DURING CONSTRUTION.
7. FOR MECHANICAL ELEVATION SECTION, SEE DRAWING No. C1M36.

NO.	DATE	REVISION	APP.

HATCH
750 TOWN & COUNTRY BLVD
SUITE 650
HOUSTON, TX 77024
P: 832-930-7670
TX FIRM NUMBER: F-314

SURVEYED BY:
AMANI ENGINEERING, INC.
FB NO. P-6357

STATE OF TEXAS
GUY N SEVERN
105809
LICENSED
PROFESSIONAL ENGINEER
7/21/2026

CITY OF HOUSTON
HOUSTON PUBLIC WORKS

LIFT STATION RENEWAL & REPLACEMENT PROJECT
BROOKLET LS

LIFT STATION ELEVATION

WBS NUMBER
R-000267-0173-4
DRAWING SCALE
AS NOTED
CITY OF HOUSTON PM
NUPUR KRISHNAN P.E. N.K.
SHEET NO. 154 OF 274

FOR CITY OF HOUSTON USE ONLY

HOUSTON PUBLIC WORKS
ACCEPTED AND FILED
82825
CITY DRAWING NUMBER
Approval Date 08/14/26
HOUSTON TX

C1E63

PLOTTED: 8/11/2026 11:02 AM
PLOT STYLE: COH.ctb
FILE PATH: \\wusppplot01\d$\Global ProjectWise Plotting - WUS\Queue 2\queue2.dwg

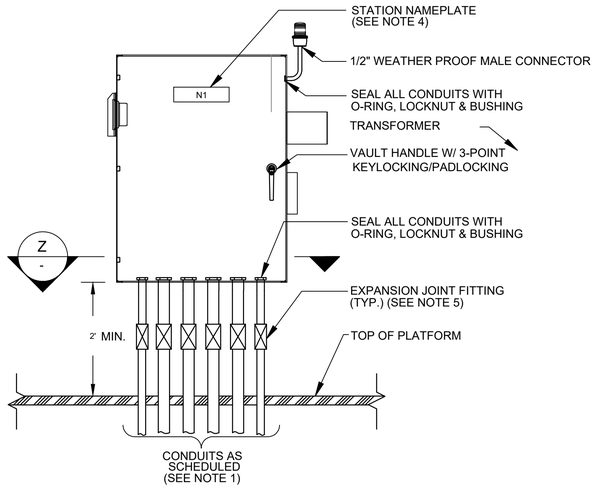

POWER & CONTROL CABINET - FRONT CONDUIT CONNECTION

SC.: NTS

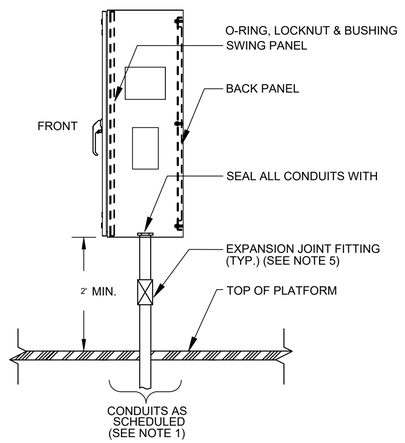

POWER & CONTROL CABINET - SIDE CONDUIT CONNECTION

SC.: NTS

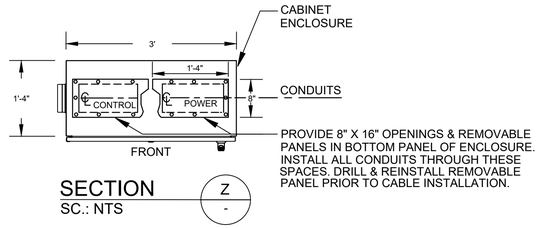

SECTION Z -

SC.: NTS

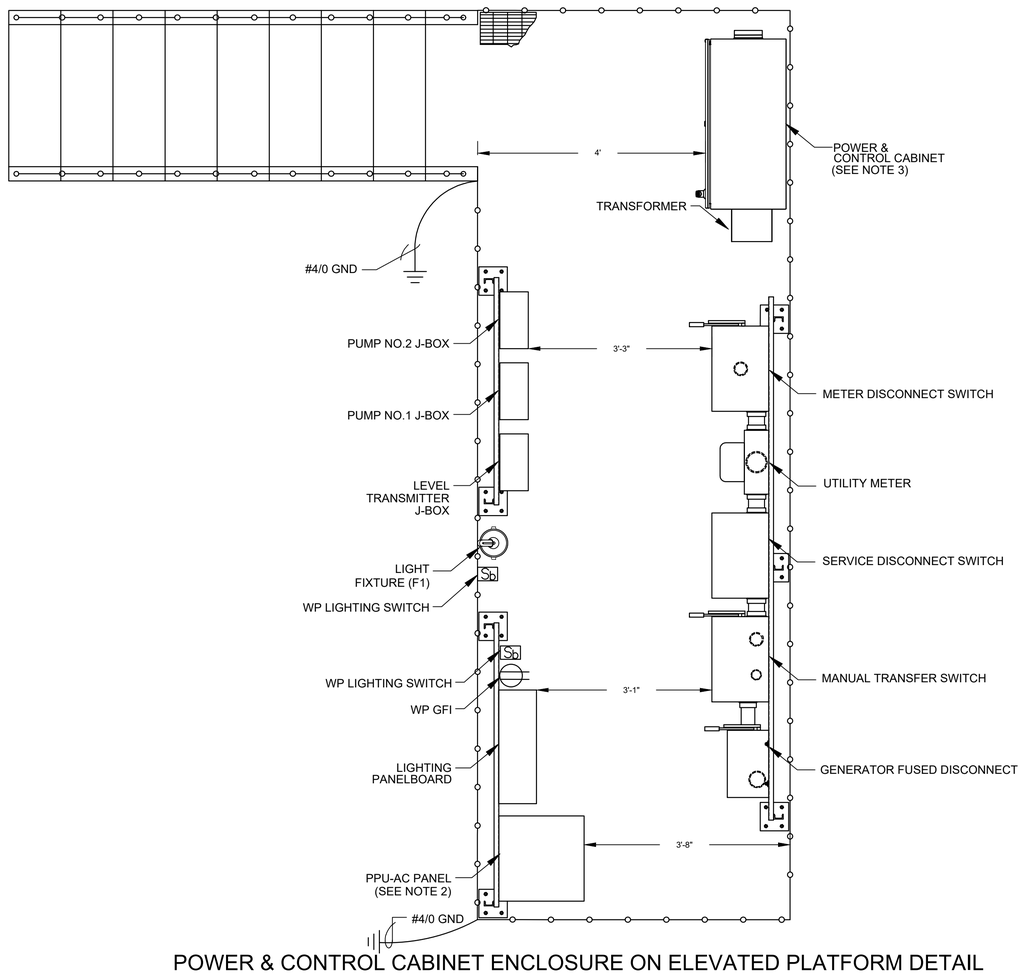

POWER & CONTROL CABINET ENCLOSURE ON ELEVATED PLATFORM DETAIL

SC.: NTS

NOTES:

1. FOR CONDUIT SCHEDULE SEE DRAWING NO. C1E77.
2. FOR PPU-AC PANEL SEE DRAWING NO. C1E69.
3. FOR POWER & CONTROL PANEL DETAIL SEE DRAWING NO. C1E65.
4. FOR NAME PLATE SCHEDULE SEE DRAWING NO. C1E65.
5. EXPANSION JOINT FITTINGS AS REQUIRED.

NO.	DATE	REVISION	APP.

HATCH
750 TOWN & COUNTRY BLVD
SUITE 650
HOUSTON, TX 77024
P: 832-930-7670
TX FIRM NUMBER: F-314

SURVEYED BY:
AMANI ENGINEERING, INC.
FB NO. P-6357

STATE OF TEXAS
GUY N SEVERN
105809
LICENSED
PROFESSIONAL ENGINEER
7/21/2026

CITY OF HOUSTON

HOUSTON PUBLIC WORKS

LIFT STATION RENEWAL & REPLACEMENT PROJECT

BROOKLET LS
POWER & CONTROL CABINET INSTALLATION

WBS NUMBER	FOR CITY OF HOUSTON USE ONLY
R-000267-0173-4	
DRAWING SCALE	
AS NOTED	
CITY OF HOUSTON PM	
NUPUR KRISHNAN P.E. N.K.	
SHEET NO. 155 OF 274	

HOUSTON PUBLIC WORKS
ACCEPTED AND FILED
82825
CITY DRAWING NUMBER
Approval Date 08/14/26
HOUSTON TX

C1E64

PLOTTED: 8/11/2026 11:01 AM
PLOT STYLE: COH.ctb
FILE PATH: \\wusppplot01\d$\Global ProjectWise Plotting - WUS\Queue 4\queue4.dwg

PLOTTED: 8/11/2026 10:59 AM
PLOT STYLE: COH.ctb
FILE PATH: \\wusppplot01\d$\Global ProjectWise Plotting - WUS\Queue 2\queue2.dwg

EQUIPMENT AND DEVICE SCHEDULE

ITEM	QTY.	DESCRIPTION
A	*	NOT USED
B	2	NEMA MOTOR STARTER, TYPE S, NONREVERSING, SIZE 2, 45A, 25HP, 480VAC, 3 POLE, SOLID STATE, 120VAC COIL, SCHNEIDER MODEL, 8536SDO1V02H30SX11
C	*	NOT USED
D	1	SINGLE CHANNEL INTRINSICALLY SAFE RELAY, ATC MODEL ISO-120-AFA
E	1	PROGRAMMING SCREEN (OIT), SIEMENS INDUSTRY TP900 - COMFORT TOUCH PANEL
F	2	HAND-OFF-AUTO SWITCH, 3 POSITION, HEAVY-DUTY, OILTIGHT WITH 2 SETS OF CONTACT BLOCKS (PUMP CONTROL), ALLEN-BRADLEY MODEL 800H-JR2B
G	2	INDICATING LIGHT, HEAVY DUTY, OILTIGHT, RED, 24 VDC, LED, WITH "RUN" LEGEND, ALLEN-BRADLEY MODEL 800H-QRTH2R
H	6	TERMINAL RAIL, STEEL GALVANIC ZINC, W: 2000 mm, H: 15 mm, D: 5.5 mm, WEIDMULLER ITEM No.0117510000
I	1	PUMP ALARM RESET PUSHBUTTON, ALLEN-BRADLEY MODEL 800H-AR2BF
J	*	NOT USED
K	*	NOT USED
L	1	LED ENCLOSURE LIGHT 100-240V, 1200lm, SOCKET TYPE B SUITABLE, HOFFMAN MODEL EL1200MS-US.
M	*	NOT USED
N	7	TAG CARRIER, SCHT 5 WEIDMULLER, CATALOG NO. 0292460000
P	2	CURRENT TRANSFORMER, RATIO AS SCHEDULED W/4-20mA OUTPUT, PHOENIX CONTACT MODEL MCR-SL-CUC-100-I
Q	8	TERMINAL BLOCKS, SIZED FOR MOTOR POWER REQUIREMENTS, WEIDMULLER WDU 10
R	16	WIRE DUCT 1" WIDE X 3" DEEP MINIMUM, LENGTH 6', HELLERMANN TYTON MODEL SL1X3W4
S	17	END BRACKET, WEW 35/2 WEIDMULLER, CATALOG NO. 1061200000
T	27	NAMEPLATES, SEE SPECIFICATIONS (SEE NAMEPLATE SCHEDULE)
U	1	ANALOG INPUT MODULE, 4 ANALOG INPUT , SIEMENS MODEL SIMATIC S7-1200, 6ES7231-4HD32-0XB0
V	*	NOT USED
W	1	CABINET WALL MOUNT, 304 SS, 48"Hx36"Wx16"D, NEMA 4X ENCLOSURE, SINGLE-DOOR, 3 POINT KEYLOCKING/PADLOCKING COMBO HANDLE. MANUFACTURED BY SAGINAW CONTROL & ENGINEERING, MODEL SCE-48EL3616SSLPPL
X	1	SWING PANEL, CARBON STEEL, POWDER COAT FINISH, 44"Hx32.63"W, FOR USE WITH SCE-48EL3616SSLPPL ENCLOSURE. MANUFACTURED BY SAGINAW CONTROL & ENGINEERING, MODEL SCE-48P36GALV.
Y	1	SUBPANEL (BACKPLANE), GALVANIZED STEEL, 45"Hx33"W, FOR USE WITH SCE-48EL3616SSLPPL ENCLOSURE. MANUFACTURED BY SAGINAW CONTROL & ENGINEERING, MODEL SCE-DF48EL36LP.
Z	*	NOT USED
AA	88	TERMINAL BLOCKS, WEIDMULLER WDU 2.5, CATALOG NO. 1020000000
BB	2	MOTOR CIRCUIT BREAKER, POWER PACT H, 60A, 3 POLE, 600VAC, THERMAL MAGNETIC, SQUARE D, MODEL HGL36060T
CC	2	ANALOG I/O SURGE SUPPRESSOR EATON MODEL IOP32D
DD	1	DIGITAL INPUT MODULE, 16 DIGITAL INPUT 24 VDC , SIEMENS MODEL SIMATIC S7-1200, 6ES7221-1BH32-0XB0
EE	1	CIRCUIT BRAKER POWERPACT H, 30A, 2 POLE, 600VAC, THERMAL MAGNETIC, SQUARE D, MODEL HJL36030, C/W ENCLOSURE EATON DPF221R
FF	1	GROUND BUS, SQUARE D MODEL 1630 PK9GTA
GG	1	LED LIGHT FOR INDOOR/OUTDOOR USE, 24 VDC, COLOR RED, FEDERAL SIGNAL MODEL LP3PL-024R.
HH	1	10 KVA, 480 - 240/120V, 1Φ, 3W DRY TYPE TRANSFORMER
II	*	NOT USED
JJ	*	NOT USED
KK	*	NOT USED
LL	1	120VAC - 24VDC PLC POWER SUPPLY 5A, PHOENIX CONTACT MODEL QUINT-PS/1AC/24DC/5
MM	2	MOTION SWITCH, CHERRY MODEL E13-00H
NN	*	NOT USED
PP	*	NOT USED
QQ	10	CONTROL RELAY, 3 POLE, 24VDC CONTROL COIL - TURCK C3-A30X/24DC W/S3-S BASE
RR	1	CONTROL RELAY, 3 POLE, 120VAC CONTROL COIL - TURCK C3-A30X/120AC W/S3-S BASE
SS	1	COMMUNICATION ETHERNET SWITCH, SIEMENS MODEL SCALANCE X310FE
TT	*	NOT USED
UU	1	PROGRAMMABLE LOGIC CONTROLLER WITH EXPANSION UNIT, SIEMENS MODEL 6ES7214-1HG40-0XB0
VV	*	NOT USED
WW	76	FUSED TERMINAL BLOCKS, WEIDMULLER WSI 6, CATALOG NO. 1011000000
XX	2	PUMP PROTECTION MODULE RATED FOR CLASS I, DIVISION I, MINICAS II 83 58 57 24VDC/AC
YY	2	ANALOG SIGNAL ISOLATOR, TURCK MODEL IMS-AI-DLI-22-DLI/L
ZZ	*	NOT USED
AB	*	NOT USED
AC	1	POWER DISTRIBUTION BLOCK, 3 POLE, EDISON MODEL HPB106-3
AD	1	POWER DISTRIBUTION BLOCK, 1 POLE, EDISON MODEL HPB106-1 (NEUTRAL)
AE	1	4" EXHAUST FAN, 120V, STAINLESS FILTERS & GRILL PACKAGE W/BUG GUARD, HOFFMAN MODEL TFP4
AF	1	T-STAT FOR EXHAUST FAN, HOFFMAN, MODEL ATEMNOF

* - AS SCHEDULED

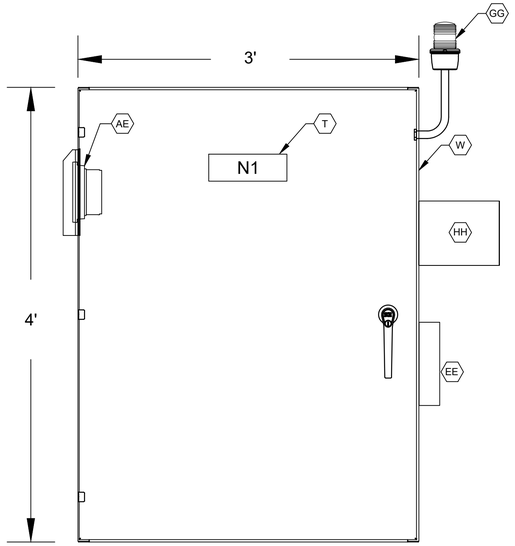

POWER & CONTROL CABINET
FRONT
SC.: 1-1/2"=1'-0"

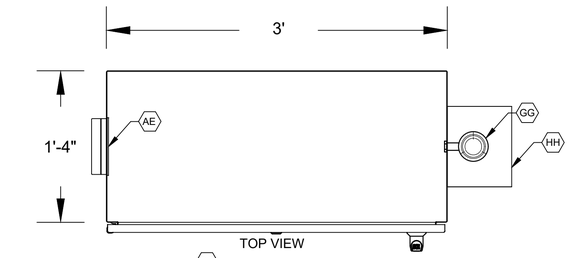

TOP VIEW

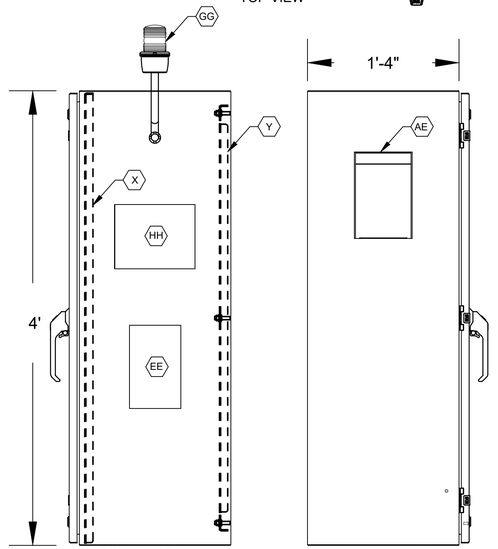

RIGHT SIDE VIEW

LEFT SIDE VIEW

POWER & CONTROL CABINET
TOP AND SIDE VIEW
SC.: 1-1/2"=1'-0"

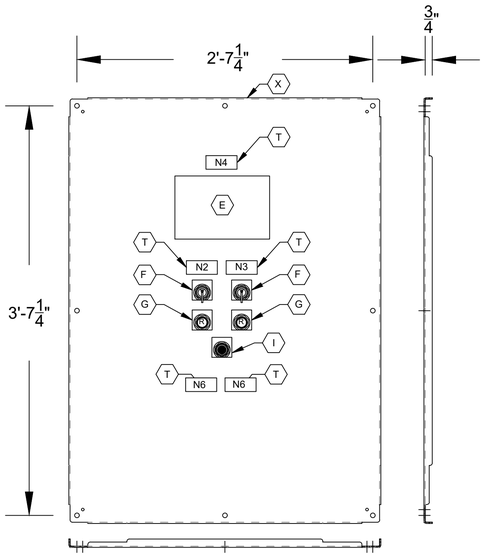

SWING PANEL
FRONT
SC.: 1-1/2"=1'-0"

DESIGNATION	ENGRAVED
N1	BROOKLET PUMP STATION
N2	PUMP NO. 1
N3	PUMP NO. 2
N4	PROGRAMMING SCREEN
N5	PRIMARY PLC
N6	MOTOR DATA HORSEPOWER (OUTPUT) ---------- 20 RPM AT FULL LOAD ---------- 1760 MAX START PER HOUR ---------- 30 FREQUENCY ---------- 60 NUMBER OF PHASES ---------- 3 MODEL NUMBER ---------- RATED VOLTAGE ---------- 480 Vac SERVICE FACTOR ---------- 0.79 FULL LOAD AMPS ---------- 26 A INSULATION CLASS ---------- H NEMA DESIGN LETTER ---------- TEMPERATURE RISE ---------- NEMA FRAME SIZE ---------- DATE OF MANUFACTURE ---------- THERMO PROTECTION ---------- MOISTURE PROTECTION ----------

NAMEPLATE SCHEDULE

NOTES:

1. NAMEPLATES SHALL BE MOUNTED TO PANELS USING STAINLESS STEEL HARDWARE.
2. REFER SPECIFICATIONS FOR ALL PANEL COMPONENTS.

NO.	DATE	REVISION	APP.

HATCH
750 TOWN & COUNTRY BLVD
SUITE 650
HOUSTON, TX 77024
P: 832-930-7670
TX FIRM NUMBER: F-314

SURVEYED BY:
AMANI ENGINEERING, INC.
FB NO. P-6357

STATE OF TEXAS
GUY N SEVERN
105809
LICENSED
PROFESSIONAL ENGINEER
7/21/2026

CITY OF HOUSTON
HOUSTON PUBLIC WORKS

LIFT STATION RENEWAL & REPLACEMENT PROJECT
BROOKLET LS

POWER & CONTROL CABINET EQUIPMENT LAYOUT AND SCHEDULE

WBS NUMBER	FOR CITY OF HOUSTON USE ONLY
R-000267-0173-4	HOUSTON PUBLIC WORKS ACCEPTED AND FILED 82825 CITY DRAWING NUMBER Approval Date 08/14/26 HOUSTON TX
DRAWING SCALE	
AS NOTED	
CITY OF HOUSTON PM	
NUPUR KRISHNAN P.E. N.K.	
SHEET NO. 156 OF 274	

C1E65

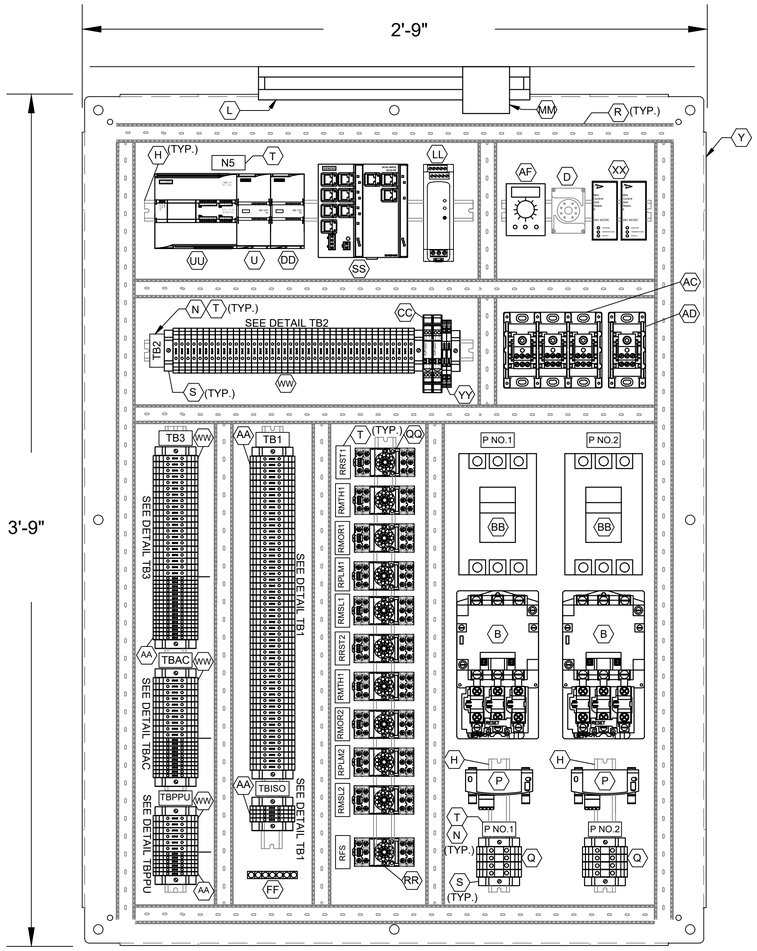

POWER & CONTROL BACKPLANE ARRANGEMENT

SC.: 3"=1'-0"

DETAIL TB1
L1A
L1N
3
3N
49
50
51
52
1004
1002
11
1001
1001A
12
1003
1003A
1002
1004
18
3N
36
36N
41
42
43
44
105
106
107
108
115
116
203
204
205
206
207
208
210
213
215
216
219
SPARE
SPARE
SPARE
SPARE
SPARE
SPARE
SPARE
SPARE
SPARE

ALL L AND N FOR EACH PUMP CONTROL TO BE FUSED

DETAIL TB2
50
52
54
52A
L+
M
13
13A
13G
14
14A
14G
17
28
29
32
35B
33
42
44
103
104
115
109
110
118
120
121
122
123
209
210
211
218
220
222
223
SPARE
SPARE
SPARE

DETAIL TBAC
L1
L2
L3
L4
L5
L6
L7
L8
L9
L10
N1
N2
N3
N4
N5
N6
N7
N8
N9
N10

DETAIL TBPPU
L1
L2
L3
L4
L5
L6
N1
N2
N3
N4
N5
N6

DETAIL TB3
1
2
3
4
5
6
7
8
9
10
11
12
13
14
15
16
17
18
19
20
N1
N2
N3
N4
N5
N6
N7
N8
N9
N10
N11
N12
N13
N14
N15
N16

DETAIL TB-ISO
1500
1501
1503
1504

NOTES:

1. SEE SHEET C1E65 FOR EQUIPMENT AND DEVICE SCHEDULE.

LEGEND

TAG	DESCRIPTION
RMTH	MOTOR HIGH TEMPERATURE ALARM RELAY
RPLM	PLC PUMP RUN RELAY
RRST	PUMP RESET AUX RELAY
RPLC	PLC MODE AUX RELAY
RMOR	MOTOR OVERLOAD ALARM RELAY
RBRM	BACKUP SYSTEM RUN RELAY
RUV	UNDER VOLTAGE RELAY
ISO	INTRINSICALLY SAFE RELAY
RFS	PUMP RUN FLOAT SWITCH RELAY
TDFRM	TIMER FLOAT SWITCH RUN RELAY
RMSL	MOTOR SEAL LEAK ALARM RELAY

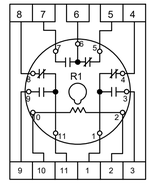

RELAY DETAIL ITEM RR

REVISION	DATE	APP.

HATCH
750 TOWN & COUNTRY BLVD
SUITE 650
HOUSTON, TX 77024
P: 832-930-7670
TX FIRM NUMBER: F-314

SURVEYED BY:
AMANI ENGINEERING, INC.
FB NO. P-6357

STATE OF TEXAS
GUY N SEVERN
105809
LICENSED
PROFESSIONAL ENGINEER
7/21/2026

CITY OF HOUSTON

HOUSTON PUBLIC WORKS

LIFT STATION RENEWAL & REPLACEMENT PROJECT

BROOKLET LS

POWER & CONTROL CABINET EQUIPMENT LAYOUT-II

WBS NUMBER	FOR CITY OF HOUSTON USE ONLY
R-000267-0173-4	
DRAWING SCALE	
AS NOTED	
CITY OF HOUSTON PM	
NUPUR KRISHNAN P.E. N.K.	
SHEET NO. 157 OF 274	

HOUSTON PUBLIC WORKS
ACCEPTED AND FILED
82825
CITY DRAWING NUMBER
Approval Date 08/14/26
HOUSTON TX

C1E66

PLOTTED: 8/11/2026 11:02 AM
PLOT STYLE: COH.ctb
FILE PATH: \\wusppplot01\d$\Global ProjectWise Plotting - WUS\Queue 1\queue1.dwg

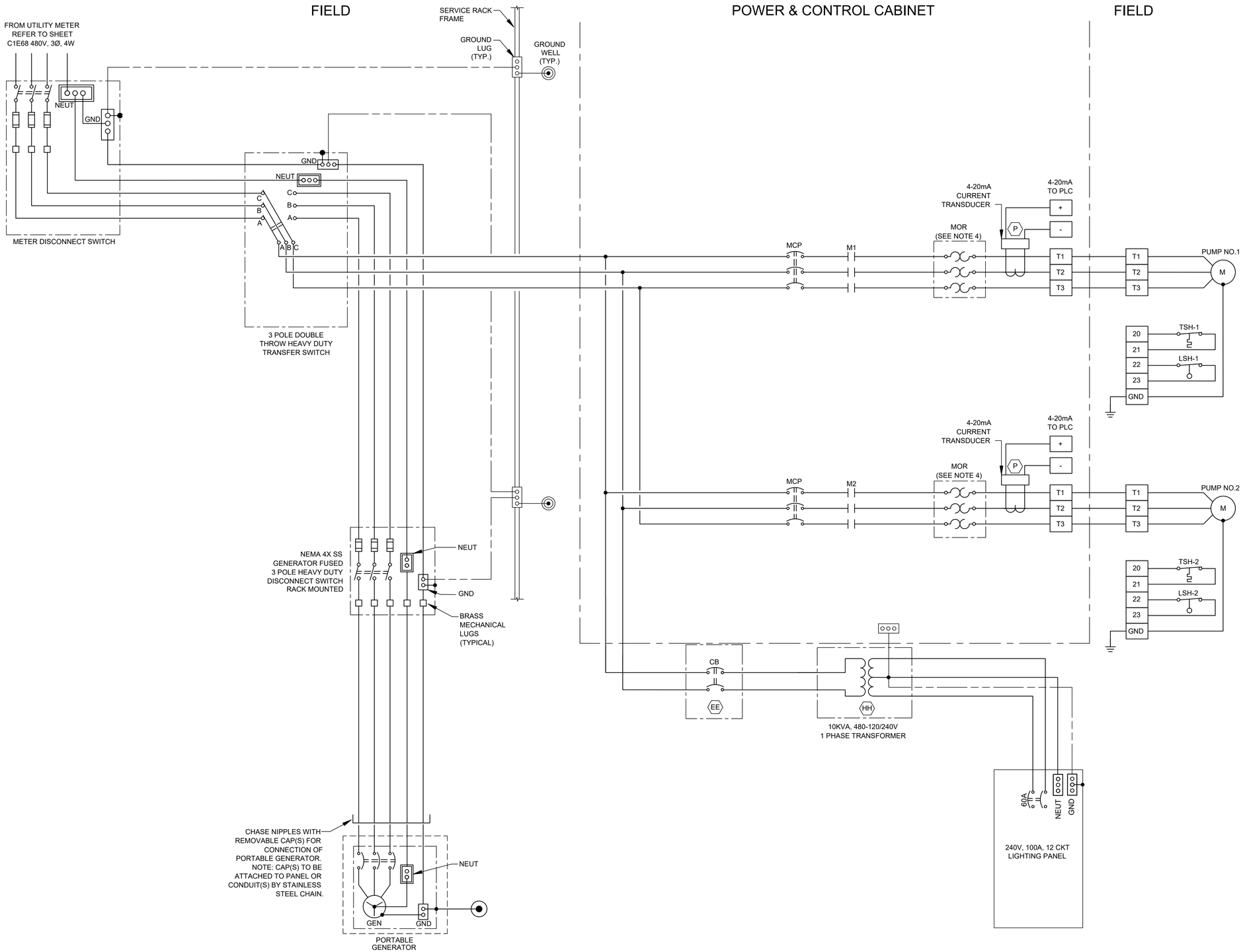

NOTES:

1. UNLESS OTHERWISE INDICATE, ALL DEVICES WITHOUT FURTHER DESIGNATION ARE LOCATED AT THE POWER & CONTROL CABINET.
2. SEE SHEET C1E65 FOR EQUIPMENT AND DEVICE SCHEDULE.
3. CONTRACTOR SHALL TERMINATE POWER & CONTROL WIRES PER MANUFACTURER'S REQUIREMENTS.
4. MOTOR OVERLOAD RELAY.

LEGEND

- △ DEVICE OR FIELD TERMINAL LOCATED AT MOTOR
- * DEVICE OR FIELD TERMINAL LOCATED REMOTE
- □ DEVICE OR FIELD TERMINAL LOCATED AT POWER PANEL
- ■ FIELD TERMINAL LOCATED AT CONTROL PANEL
- ▲ REMOTE TERMINAL
- ● DEVICE TERMINAL NO.
- ◆ PC INTERFACE TERMINAL

NO.	DATE	REVISION	APP.

HATCH
750 TOWN & COUNTRY BLVD
SUITE 650
HOUSTON, TX 77024
P: 832-930-7670
TX FIRM NUMBER: F-314

SURVEYED BY:
AMANI ENGINEERING, INC.
FB NO. P-6357

STATE OF TEXAS
GUY N SEVERN
105809
LICENSED
PROFESSIONAL ENGINEER
7/21/2026

CITY OF HOUSTON

HOUSTON PUBLIC WORKS

LIFT STATION RENEWAL & REPLACEMENT PROJECT

BROOKLET LS

INCOMING POWER THREE LINE DIAGRAM

WBS NUMBER
R-000267-0173-4
DRAWING SCALE
AS NOTED
CITY OF HOUSTON PM
NUPUR KRISHNAN P.E. N.K.

FOR CITY OF HOUSTON USE ONLY

HOUSTON
PUBLIC WORKS
ACCEPTED AND FILED
82825
CITY DRAWING NUMBER
Approval Date 08/14/26
HOUSTON TX

C1E67

SHEET NO. 158 OF 274

PLOTTED: 8/11/2026 11:05 AM
PLOT STYLE: COH.ctb
FILE PATH: \\wuspploti01\c$\Global ProjectWise Plotting - WUS\Queue 4\queue4.dwg

PLOTTED: 8/11/2026 11:02 AM
PLOT STYLE: COH.ctb
FILE PATH: \\wuspplot01\d$\Global ProjectWise Plotting - WUS\Queue 3\queue3.dwg

POWER & CONTROL CABINET

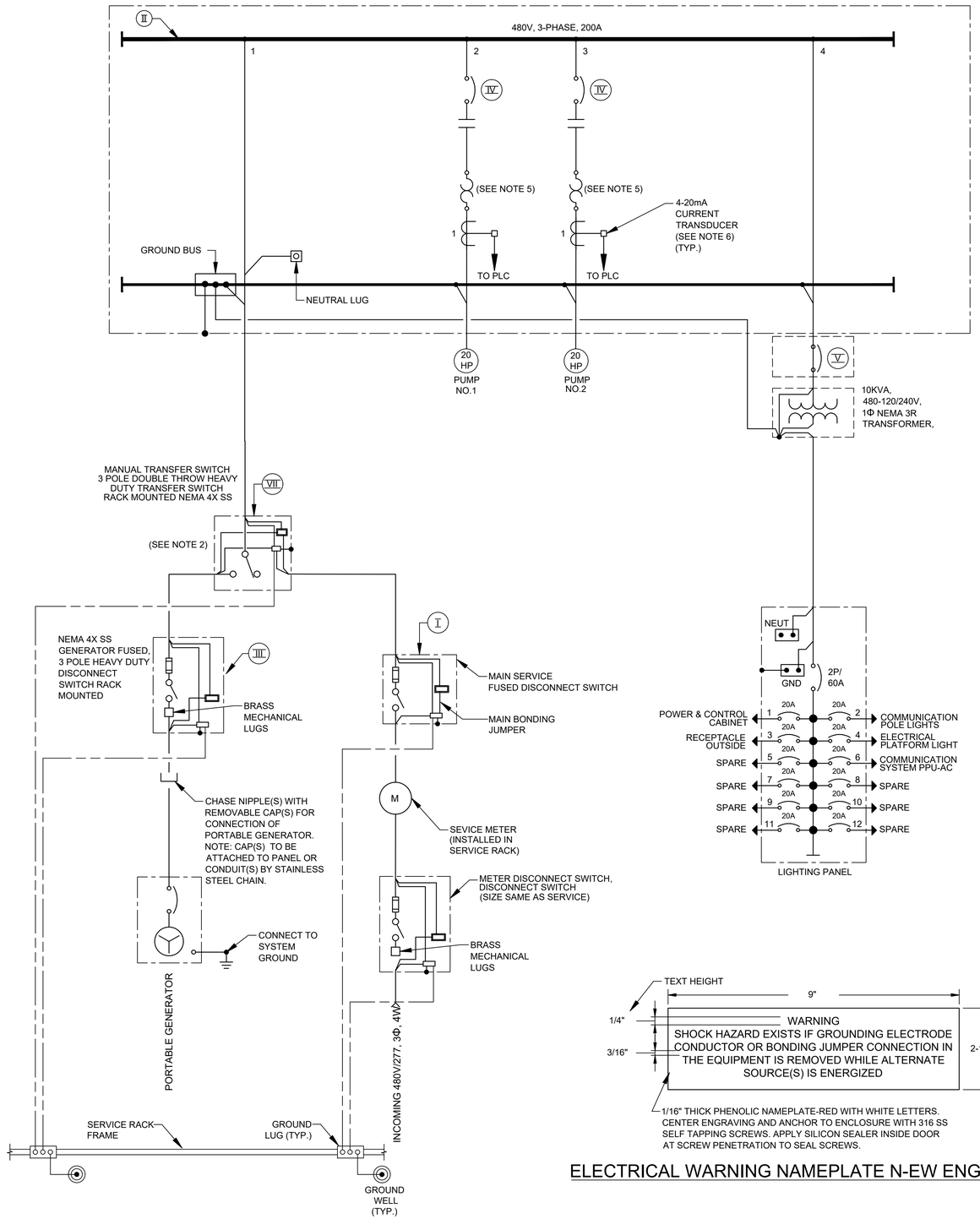

ITEM	CIRCUIT	DESCRIPTION	RATINGS FOR PUMP SIZES INDICATED: 2 @ 20HP
I	--	MAIN DISCONNECT SWITCH	
		OPERATING VOLTAGE	480V
		CURRENT RATING	200A
		CURRENT LIMITING FUSES TYPE & SIZE	CLASS J 100A
II	--	POWER & CONTROL CABINET POWER DISTRIBUTION BLOCK	
		OPERATING VOLTAGE	480V
		CURRENT RATING	200A
		NEUTRAL SIZE & TYPE	-
		BUS BRACING	-
III	--	GENERATOR FUSED DISCONNECT SWITCH	3P, 4W SN
		OPERATING VOLTAGE	480V
		CURRENT RATING	100A
		CURRENT LIMITING FUSES TYPE & SIZE	CLASS J 100A
IV	2 3	PUMP MOTOR STARTERS	
		QUANTITY	2
		MOUNTING	FIXED
		SHORT CIRCUIT PROTECTION	
		3 POLE - TYPE	MCP
		OPERATING VOLTAGE	480V
		FRAME SIZE	150A
		TRIP SETTING	60A
		INTERRUPT CAPACITY	42KA SYM
		MOTOR STARTING CONTACTOR	
		3 POLE - TYPE	AIR
		OPERATING VOLTAGE	480V
		SIZE	NEMA 2
		OVERLOAD PROTECTION TYPE	SOLID STATE MOR
V	4	LIGHTING TRANSFORMER FEEDER BREAKER	
		NO. OF POLES	2
		TYPE	MOLDED CASE
		OPERATING VOLTAGE	480V
		FRAME SIZE	100A
		TRIP SETTING	30A
		INTERRUPT CAPACITY	42KA SYM
VII	--	MANUAL TRANSFER SWITCH	3P, 4W SN
		OPERATING VOLTAGE	480V
		CURRENT RATING	100A

NOTES:

1. FOR DESCRIPTION AND RATINGS OF ITEMS INDICATED WITH ROMAN NUMERAL FLAGS, SEE DEVICE RATINGS SCHEDULE.
2. PROVIDE A NORMALLY OPEN (NO) AUXILIARY CONTACT FOR BOTH ON POSITIONS.
3. CONTRACTOR SHALL VERIFY ACTUAL AMPERAGES OF MOTORS AND SIZE STARTERS, MOTOR CIRCUIT PROTECTORS, ETC. ACCORDINGLY.
4. REFER TO SPEC SECTION 16120 FOR CONDUCTOR COLOR CODE.
5. MOTOR OVERLOAD RELAY.
6. PROVIDE 5A PRIMARY TO 4-20mA CURRENT TRANSDUCER.

1/16" THICK PHENOLIC NAMEPLATE-RED WITH WHITE LETTERS. CENTER ENGRAVING AND ANCHOR TO ENCLOSURE WITH 316 SS SELF TAPPING SCREWS. APPLY SILICON SEALER INSIDE DOOR AT SCREW PENETRATION TO SEAL SCREWS.

ELECTRICAL WARNING NAMEPLATE N-EW ENGRAVING

LOAD CALCULATION			
ITEM	DESCRIPTION	HP	FLI*
1	PUMP NO. 1	20 HP	27A
2	PUMP NO. 2	20 HP	27A
3	LIGHTING PANEL		15A
SUBTOTAL			69A
25% OF LARGEST MOTOR LOAD			7A
MINIMUM AMPACITY @480V,3Φ			76A

* BASED ON SELECTED PUMP MFG DATA

NO.	DATE	REVISION	APP.

HATCH
750 TOWN & COUNTRY BLVD
SUITE 650
HOUSTON, TX 77024
P: 832-930-7670
TX FIRM NUMBER: F-314

SURVEYED BY:
AMANI ENGINEERING, INC.
FB NO. P-6357

STATE OF TEXAS
GUY N SEVERN
105809
LICENSED
PROFESSIONAL ENGINEER
7/21/2026

CITY OF HOUSTON
HOUSTON PUBLIC WORKS

LIFT STATION RENEWAL & REPLACEMENT PROJECT
BROOKLET LS

SINGLE LINE DIAGRAM

WBS NUMBER
R-000267-0173-4
DRAWING SCALE
AS NOTED
CITY OF HOUSTON PM
NUPUR KRISHNAN P.E. N.K.

FOR CITY OF HOUSTON USE ONLY

HOUSTON PUBLIC WORKS
ACCEPTED AND FILED
82825
CITY DRAWING NUMBER
Approval Date 08/14/26
HOUSTON TX

C1E68

SHEET NO. 159 OF 274

PLOT STYLE: COH.ctb
PLOTTED: 8/11/2026 10:55 AM
FILE PATH: \\wuspplot01\d$\Global ProjectWise Plotting - WUS\Queue 4\queue4.dwg

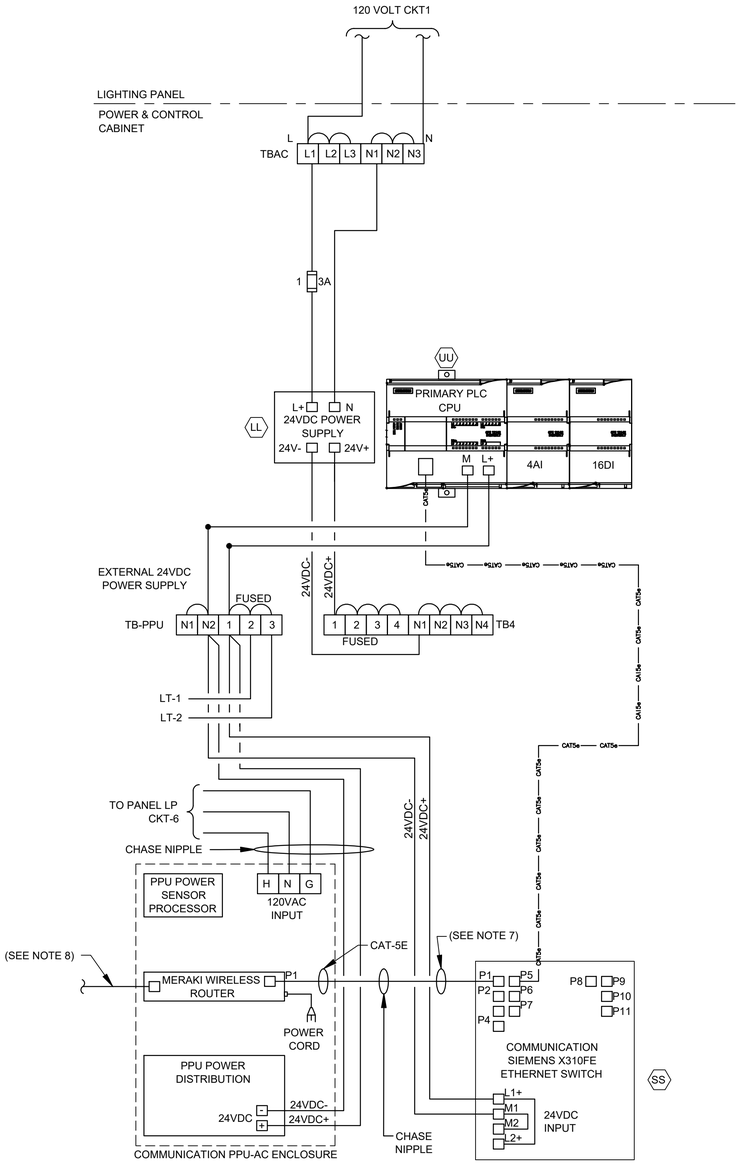

CONTROL POWER & COMMUNICATIONS WIRING

DIAGRAM

NTS

(SEE NOTE 8)

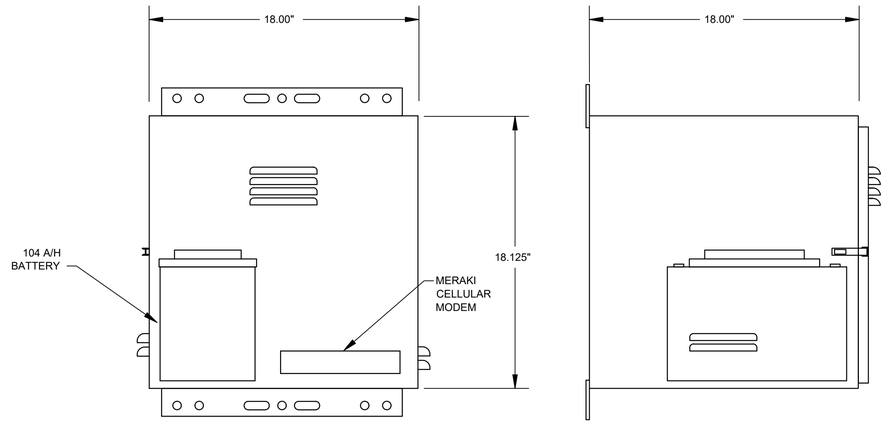

PPU-AC ENCLOSURE FRONT VIEW

PPU-AC ENCLOSURE SIDE VIEW

PPU-AC CONTROL ENCLOSURE

ELEVATION

NTS

(SEE NOTE 4)

NOTES:

1. FOR DESCRIPTION AND RATINGS OF ITEMS INDICATED WITH ITEM TAG, SEE DEVICE RATINGS SCHEDULE.
2. REFER TO SPEC SECTION 16120 FOR CONDUCTOR COLOR CODE.
3. THE PLC POWER SUPPLY SHALL FEED THE 24VDC I/O.
4. SEE SHEET C1E65 FOR EQUIPMENT AND DEVICE SCHEDULE.
5. COORDINATE WITH VENDOR TO PROVIDE PROPER VENTILATION WHERE APPLICABLE.
6. COMMUNICATION PPU-AC & SCADA SHALL BE PROVIDED BY CONTRACTOR INCLUDING TO RUN CONDUITS & WIRES.
7. ETHERNET CABLE FOR MERAKI CELLULAR ROUTER (P1).
8. POE CABLE TO RADIO.

NO.	DATE	REVISION	APP.

HATCH
750 TOWN & COUNTRY BLVD
SUITE 650
HOUSTON, TX 77024
P: 832-930-7670
TX FIRM NUMBER: F-314

SURVEYED BY:
AMANI ENGINEERING, INC.
FB NO. P-6357

STATE OF TEXAS
GUY N SEVERN
105809
LICENSED PROFESSIONAL ENGINEER
7/21/2026

CITY OF HOUSTON
HOUSTON PUBLIC WORKS

LIFT STATION RENEWAL & REPLACEMENT PROJECT
BROOKLET LS

COMMUNICATION DIAGRAM

WBS NUMBER	FOR CITY OF HOUSTON USE ONLY
R-000267-0173-4	HOUSTON PUBLIC WORKS ACCEPTED AND FILED 82825 CITY DRAWING NUMBER Approval Date 08/14/26 HOUSTON TX
DRAWING SCALE	
AS NOTED	
CITY OF HOUSTON PM	
NUPUR KRISHNAN P.E. N.K.	
SHEET NO. 160 OF 274	

C1E69

PLOTTED: 8/11/2026 10:56 AM
PLOT STYLE: COH.ctb
FILE PATH: \\wuspplot01\d$\Global ProjectWise Plotting - WUS\Queue 2\queue2.dwg

HMI

POWER & CONTROL CABINET (PLC)

POWER & CONTROL CABINET

PUMP NO. 1

SEAL FAIL ALARM	MOTOR OVERLOAD ALARM	MOTOR CURRENT	HIGH TEMP ALARM	IN HAND	AUTO	ON/OFF	START/ STOP
MA 1	MO 1	II 1	TH 1	HI 1	IA 1	YFS 1	YCS 1

PUMP NO. 2

SEAL FAIL ALARM	MOTOR OVERLOAD ALARM	MOTOR CURRENT	HIGH TEMP ALARM	IN HAND	IN AUTO	ON/OFF	START/ STOP
MA 2	MO 2	II 2	TH 2	HI 2	IA 2	YFS 2	YCS 2

PLC

ALARMS RESET	FLOAT HIGH-HIGH WETWELL LEVEL
RE 1	LAHH 1A

480V

PUMP NO. 1 H/O/A RUN

PUMP NO. 2 H/O/A RUN

PUMP POWER & CONTROL CABINET

ALARMS RESET

TO SHEET C1E71

C1E71

C1E71

WET WELL

LT 1

LE 1

LT 2

LE 2

LSH 1A

TSH 1A

M

PUMP NO.1

FS2 HIGH HIGH LEVEL FLOAT SWITCH

LSH 2A

TSH 2A

M

PUMP NO.2

FS1 LOW LEVEL FLOAT SWITCH

AIR-RELEASE

XX"-DIP

XX"-DIP

XX"-DIP

XX"-DIP

DISCHARGE

NO.	DATE	REVISION	APP.

HATCH
750 TOWN & COUNTRY BLVD
SUITE 650
HOUSTON, TX 77024
P: 832-930-7670
TX FIRM NUMBER: F-314

SURVEYED BY:
AMANI ENGINEERING, INC.
FB NO. P-6357

STATE OF TEXAS
GUY N SEVERN
105809
LICENSED PROFESSIONAL ENGINEER
7/21/2026

CITY OF HOUSTON

HOUSTON PUBLIC WORKS

LIFT STATION RENEWAL & REPLACEMENT PROJECT

BROOKLET LS

PROCESS & INSTRUMENTATION DIAGRAM-I

WBS NUMBER
R-000267-0173-4
DRAWING SCALE
AS NOTED
CITY OF HOUSTON PM
NUPUR KRISHNAN P.E. N.K.
SHEET NO. 161 OF 274

FOR CITY OF HOUSTON USE ONLY

HOUSTON PUBLIC WORKS
ACCEPTED AND FILED
82825
CITY DRAWING NUMBER
Approval Date 08/14/26
HOUSTON TX

C1E70

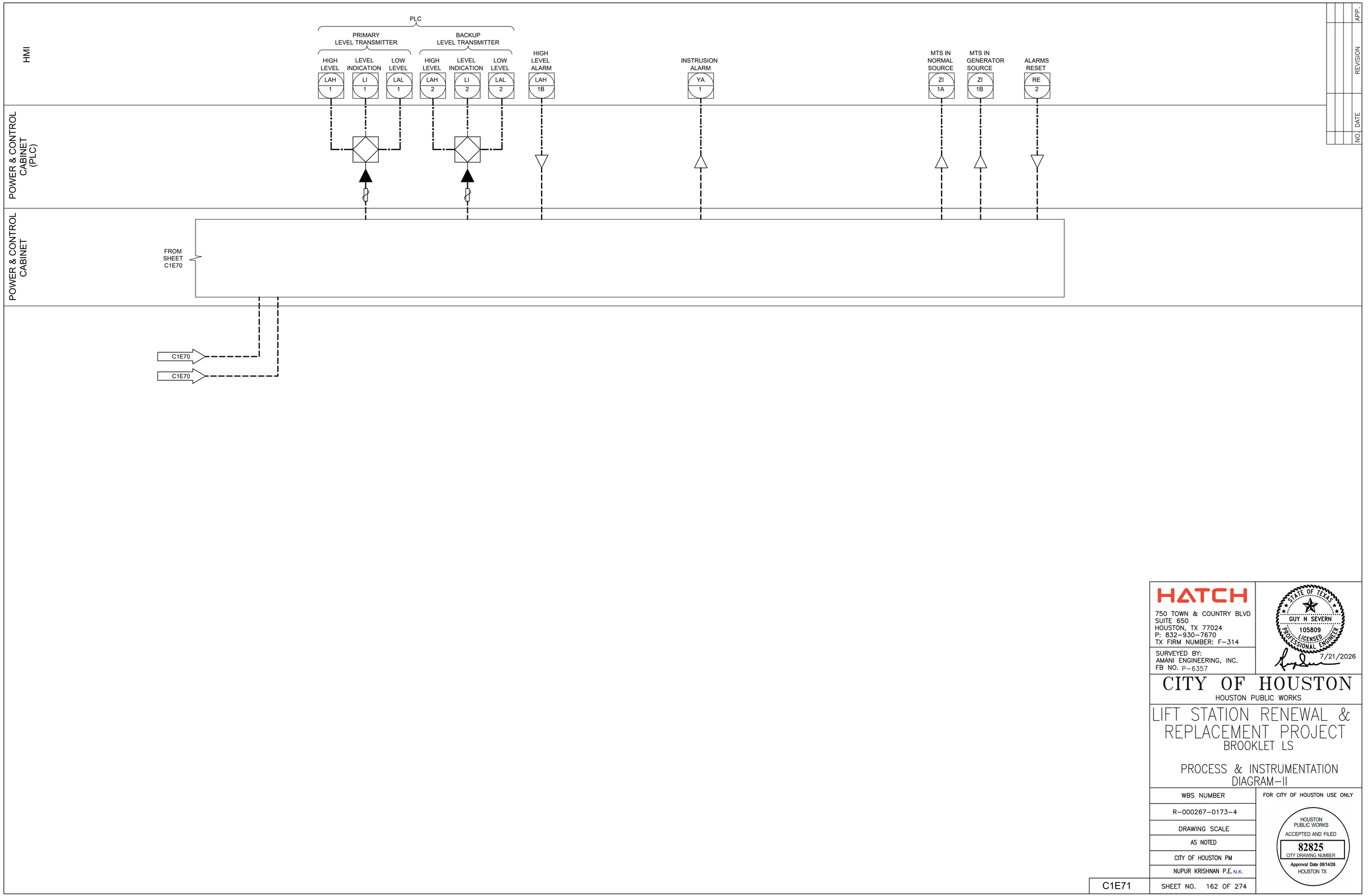

NO.	DATE	REVISION	APP.

PLOTTED: 8/11/2026 10:58 AM

PLOT STYLE: COH.ctb

FILE PATH: \\wusppplot01\d$\Global ProjectWise Plotting - WUS\Queue 4\queue4.dwg

HATCH
750 TOWN & COUNTRY BLVD
SUITE 650
HOUSTON, TX 77024
P: 832-930-7670
TX FIRM NUMBER: F-314

SURVEYED BY:
AMANI ENGINEERING, INC.
FB NO. P-6357

STATE OF TEXAS
GUY N SEVERN
105809
LICENSED
PROFESSIONAL ENGINEER
7/21/2026

CITY OF HOUSTON

HOUSTON PUBLIC WORKS

LIFT STATION RENEWAL & REPLACEMENT PROJECT

BROOKLET LS

PROCESS & INSTRUMENTATION DIAGRAM-II

WBS NUMBER
R-000267-0173-4
DRAWING SCALE
AS NOTED
CITY OF HOUSTON PM
NUPUR KRISHNAN P.E. N.K.
SHEET NO. 162 OF 274

FOR CITY OF HOUSTON USE ONLY

HOUSTON PUBLIC WORKS
ACCEPTED AND FILED
82825
CITY DRAWING NUMBER
Approval Date 08/14/26
HOUSTON TX

C1E71

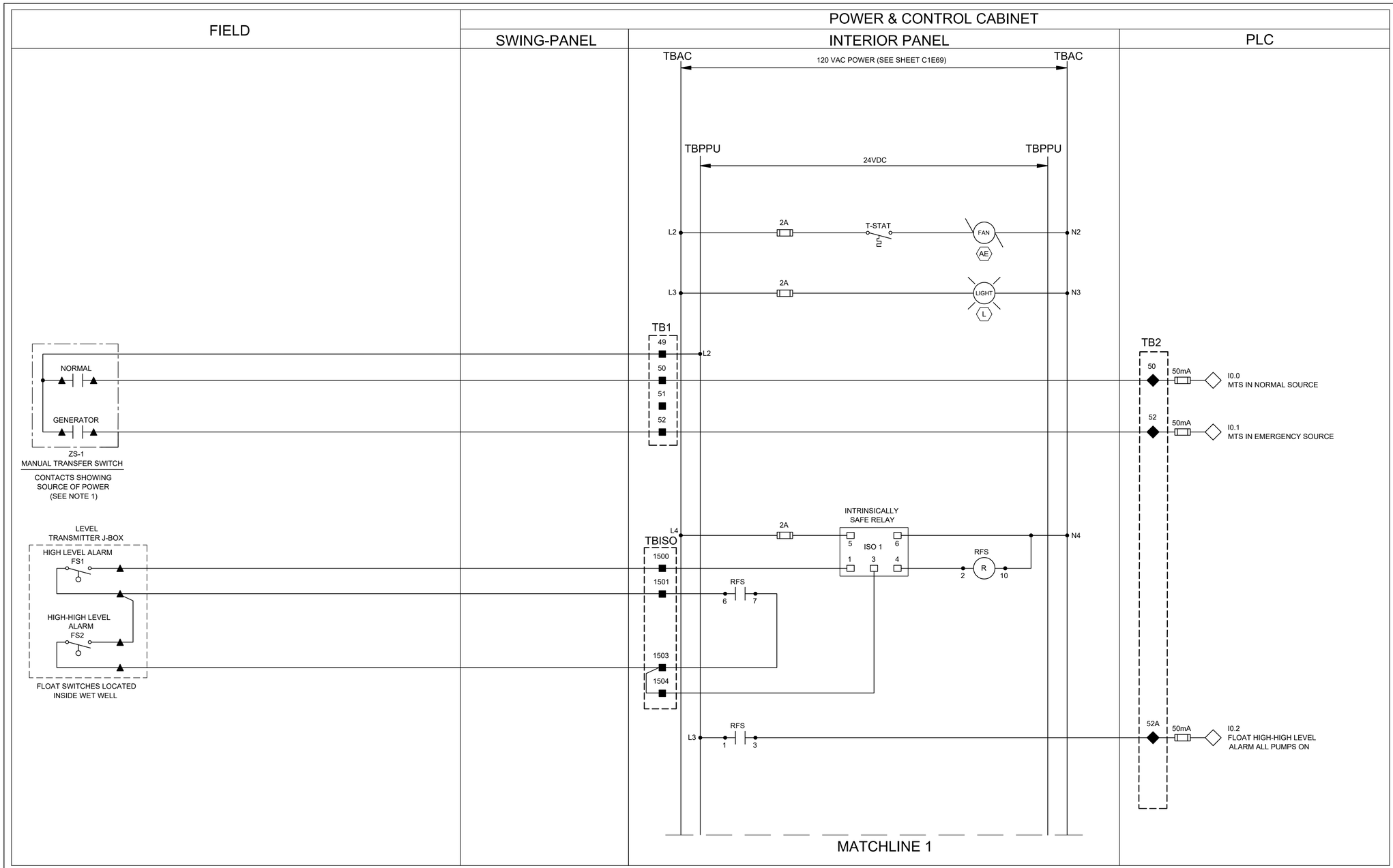

NO.	DATE	REVISION	APP.

NOTES:

1. PROVIDE MANUAL TRANSFER SWITCH DRY CONTACT.
2. ALL FLOAT CONTROL CIRCUIT WIRES COLOR SHALL BE YELLOW.
3. SEE SHEET C1E65 FOR EQUIPMENT AND DEVICE SCHEDULE.

LEGEND

- △ DEVICE OR FIELD TERMINAL LOCATED AT MOTOR
- ✳ DEVICE OR FIELD TERMINAL LOCATED REMOTE
- □ DEVICE OR FIELD TERMINAL LOCATED AT MCC/POWER PANEL
- ■ FIELD TERMINAL LOCATED AT CONTROL PANEL
- ▲ REMOTE TERMINAL
- ● DEVICE TERMINAL NO.
- ◆ PLC INTERFACE TERMINAL

HATCH
750 TOWN & COUNTRY BLVD
SUITE 650
HOUSTON, TX 77024
P: 832-930-7670
TX FIRM NUMBER: F-314

SURVEYED BY:
AMANI ENGINEERING, INC.
FB NO. P-6357

STATE OF TEXAS
GUY N SEVERN
105809
LICENSED
PROFESSIONAL ENGINEER
7/21/2026

CITY OF HOUSTON
HOUSTON PUBLIC WORKS

LIFT STATION RENEWAL & REPLACEMENT PROJECT
BROOKLET LS

POWER & CONTROL CABINET
CONTROL WIRING DIAGRAM-I

WBS NUMBER
R-000267-0173-4
DRAWING SCALE
AS NOTED
CITY OF HOUSTON PM
NUPUR KRISHNAN P.E. N.K.
SHEET NO. 163 OF 274

FOR CITY OF HOUSTON USE ONLY

HOUSTON
PUBLIC WORKS
ACCEPTED AND FILED
82825
CITY DRAWING NUMBER
Approval Date 08/14/26
HOUSTON TX

C1E72

PLOTTED: 8/11/2026 10:56 AM
PLOT STYLE: COH.ctb
FILE PATH: \\wusppplot01\d$\Global ProjectWise Plotting - WUS\Queue 1\queue1.dwg

PLOT STYLE: COH.ctb
PLOTTED: 8/11/2026 10:55 AM
FILE PATH: \\wusppplot01\d$\Global ProjectWise Plotting - WUS\Queue 3\queue3.dwg

NO.	DATE	REVISION	APP.

NOTES:

1. SEE SHEET C1E65 FOR EQUIPMENT AND DEVICE SCHEDULE.

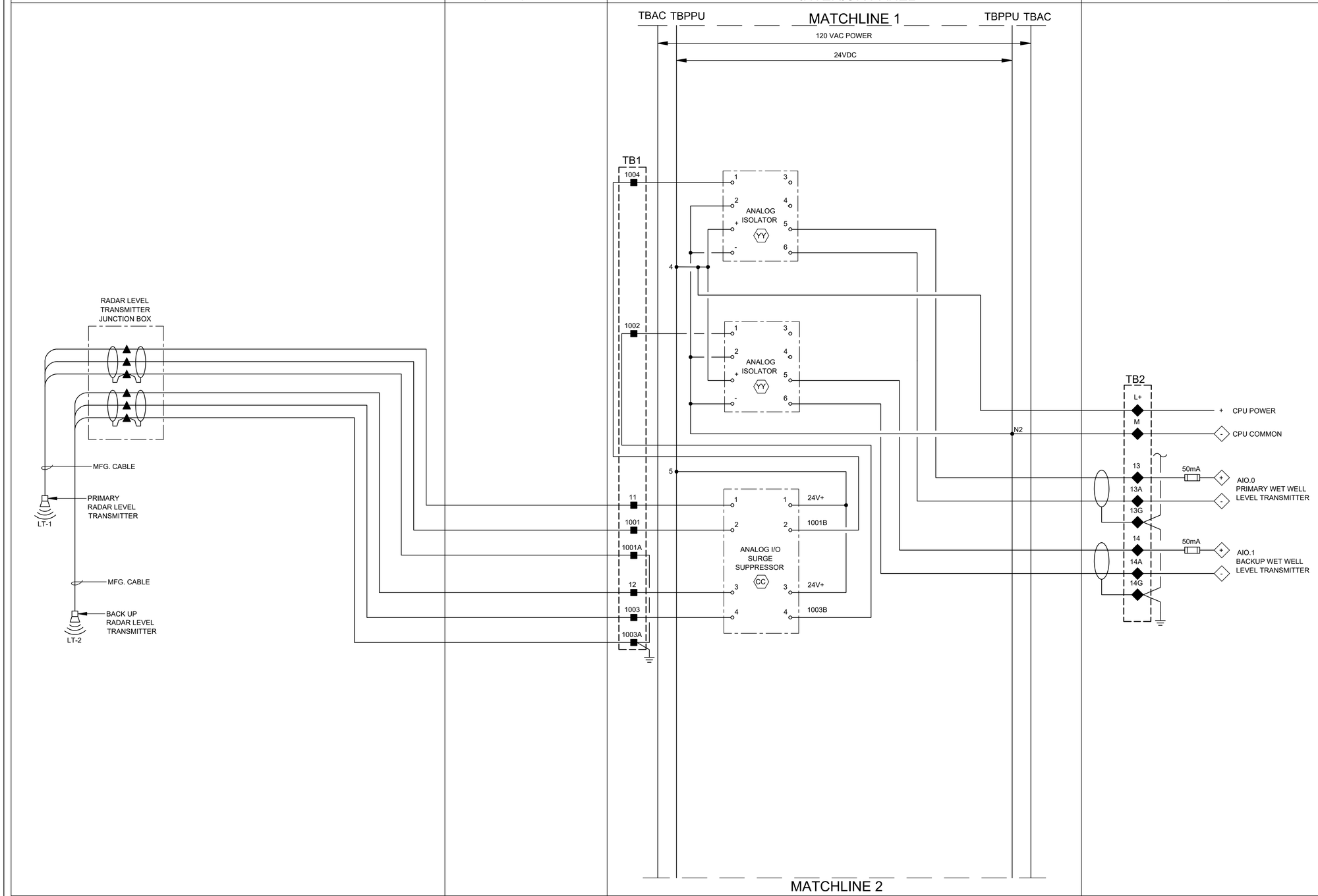

LEGEND

- △ DEVICE OR FIELD TERMINAL LOCATED AT MOTOR
- ✳ DEVICE OR FIELD TERMINAL LOCATED REMOTE
- □ DEVICE OR FIELD TERMINAL LOCATED AT MCC/POWER PANEL
- ■ FIELD TERMINAL LOCATED AT CONTROL PANEL
- ▲ REMOTE TERMINAL
- ● DEVICE TERMINAL NO.
- ◆ PLC INTERFACE TERMINAL

HATCH
750 TOWN & COUNTRY BLVD
SUITE 650
HOUSTON, TX 77024
P: 832-930-7670
TX FIRM NUMBER: F-314

SURVEYED BY:
AMANI ENGINEERING, INC.
FB NO. P-6357

STATE OF TEXAS
GUY N SEVERN
105809
LICENSED PROFESSIONAL ENGINEER
7/21/2026

CITY OF HOUSTON
HOUSTON PUBLIC WORKS

LIFT STATION RENEWAL & REPLACEMENT PROJECT
BROOKLET LS

POWER & CONTROL CABINET
CONTROL WIRING DIAGRAM-II

WBS NUMBER
R-000267-0173-4
DRAWING SCALE
AS NOTED
CITY OF HOUSTON PM
NUPUR KRISHNAN P.E. N.K.
SHEET NO. 164 OF 274

FOR CITY OF HOUSTON USE ONLY

HOUSTON PUBLIC WORKS
ACCEPTED AND FILED
82825
CITY DRAWING NUMBER
Approval Date 08/14/26
HOUSTON TX

C1E73

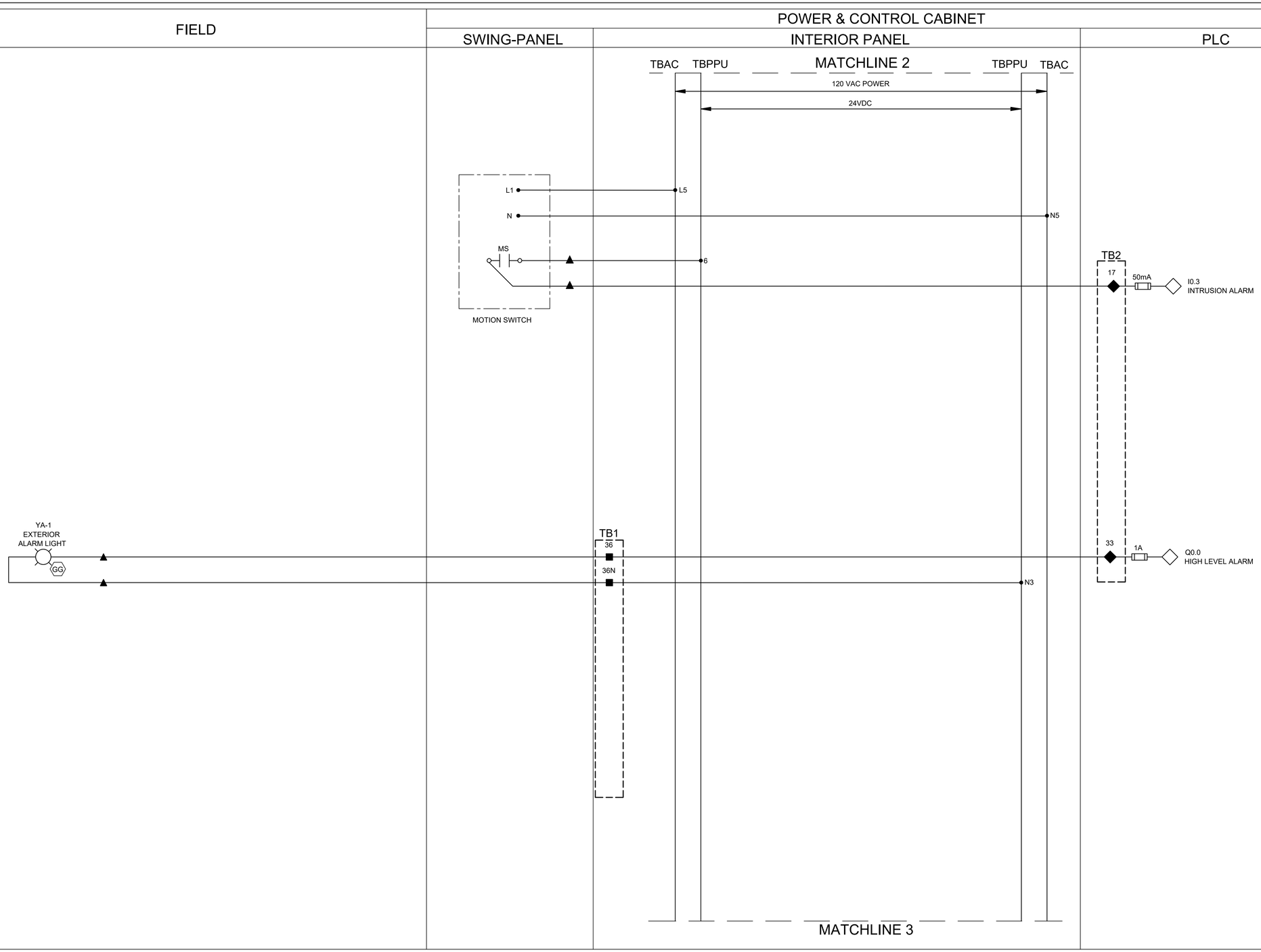

NOTES:

1. PROVIDE ONE LIMIT SWITCH PER EXTERIOR CONTROL PANEL AND POWER PANEL DOOR, WIRED IN PARALLEL.
2. SEE SHEET C1E65 FOR EQUIPMENT AND DEVICE SCHEDULE.

LEGEND

- △ DEVICE OR FIELD TERMINAL LOCATED AT MOTOR
- ✳ DEVICE OR FIELD TERMINAL LOCATED REMOTE
- □ DEVICE OR FIELD TERMINAL LOCATED AT MCC/POWER PANEL
- ■ FIELD TERMINAL LOCATED AT CONTROL PANEL
- ▲ REMOTE TERMINAL
- ● DEVICE TERMINAL NO.
- ◆ PLC INTERFACE TERMINAL

NO.	DATE	REVISION	APP.

HATCH
750 TOWN & COUNTRY BLVD
SUITE 650
HOUSTON, TX 77024
P: 832-930-7670
TX FIRM NUMBER: F-314

SURVEYED BY:
AMANI ENGINEERING, INC.
FB NO. P-6357

STATE OF TEXAS
GUY N SEVERN
105809
LICENSED
PROFESSIONAL ENGINEER
7/21/2026

CITY OF HOUSTON
HOUSTON PUBLIC WORKS

LIFT STATION RENEWAL & REPLACEMENT PROJECT
BROOKLET LS

POWER & CONTROL CABINET
CONTROL WIRING DIAGRAM-III

WBS NUMBER	FOR CITY OF HOUSTON USE ONLY
R-000267-0173-4	HOUSTON PUBLIC WORKS ACCEPTED AND FILED 82825 CITY DRAWING NUMBER Approval Date 08/14/26 HOUSTON TX
DRAWING SCALE	
AS NOTED	
CITY OF HOUSTON PM	
NUPUR KRISHNAN P.E. N.K.	
SHEET NO. 165 OF 274	

C1E74

PLOTTED: 8/11/2026 11:01 AM
PLOT STYLE: COH.ctb
FILE PATH: \\wusppplot01\d$\Global ProjectWise Plotting - WUS\Queue 5\queue5.dwg

PLOTTED: 8/11/2026 10:59 AM
PLOT STYLE: COH.ctb
FILE PATH: \\wusppplo101\d$\Global ProjectWise Plotting - WUS\Queue 1\queue1.dwg

NO.	DATE	REVISION	APP.

FIELD

POWER & CONTROL CABINET

SWING-PANEL

INTERIOR PANEL

PLC

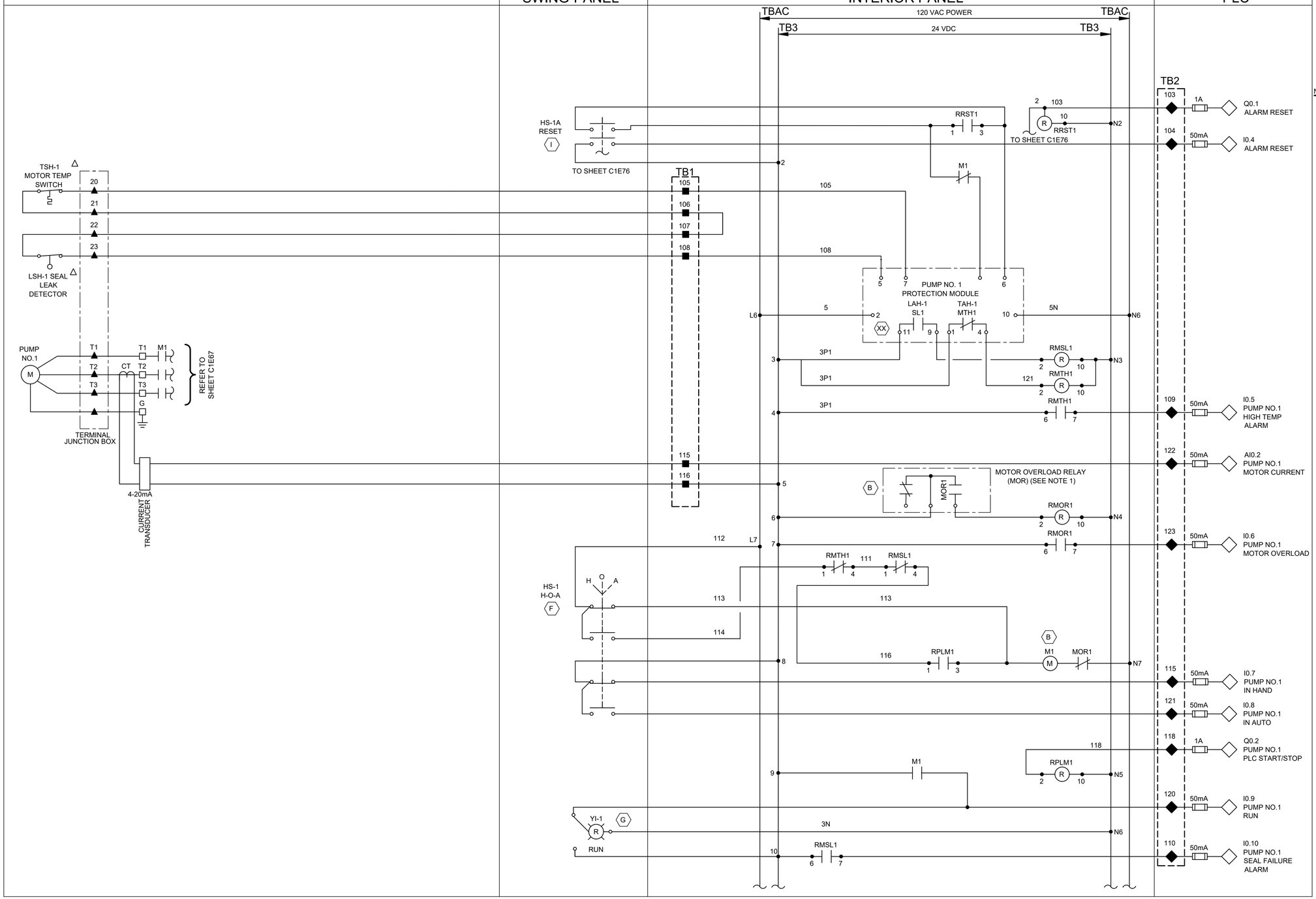

NOTES:

1. MOTOR OVERLOAD RELAY OUTPUT CONTACT SHOWN IS NORMALLY CLOSED WHEN RELAY IS DE-ENERGIZED, OPEN WHEN ENERGIZED, AND CLOSED WHEN IN ALARM. VERIFY OPERATION OF RELAY PROVIDED AND ADJUST CONNECTION OF RMOR AUXILIARY RELAYS.
2. SEE SHEET C1E65 FOR EQUIPMENT AND DEVICE SCHEDULE.
3. ALL FLOAT CONTROL CIRCUIT WIRES COLOR SHALL BE YELLOW.

LEGEND

- △ DEVICE OR FIELD TERMINAL LOCATED AT MOTOR
- ✳ DEVICE OR FIELD TERMINAL LOCATED REMOTE
- □ DEVICE OR FIELD TERMINAL LOCATED AT MCC/POWER PANEL
- ■ FIELD TERMINAL LOCATED AT CONTROL PANEL
- ▲ REMOTE TERMINAL
- ● DEVICE TERMINAL NO.
- ◆ PLC INTERFACE TERMINAL

HATCH
750 TOWN & COUNTRY BLVD
SUITE 650
HOUSTON, TX 77024
P: 832-930-7670
TX FIRM NUMBER: F-314

SURVEYED BY:
AMANI ENGINEERING, INC.
FB NO. P-6357

STATE OF TEXAS
GUY N SEVERN
105809
LICENSED PROFESSIONAL ENGINEER
7/21/2026

CITY OF HOUSTON

HOUSTON PUBLIC WORKS

LIFT STATION RENEWAL & REPLACEMENT PROJECT

BROOKLET LS

PUMP NO.1 CONTROL WIRING DIAGRAM

WBS NUMBER	FOR CITY OF HOUSTON USE ONLY
R-000267-0173-4	HOUSTON PUBLIC WORKS ACCEPTED AND FILED 82825 CITY DRAWING NUMBER Approval Date 08/14/26 HOUSTON TX
DRAWING SCALE	
AS NOTED	
CITY OF HOUSTON PM	
NUPUR KRISHNAN P.E. N.K.	
SHEET NO. 166 OF 274	

C1E75

PLOTTED: 8/11/2026 10:58 AM
PLOT STYLE: COH.ctb
FILE PATH: \\wuspplpl01\d$\Global ProjectWise Plotting - WUS\Queue 3\queue3.dwg

NO.	DATE	REVISION	APP.

FIELD

POWER & CONTROL CABINET

SWING-PANEL

INTERIOR PANEL

PLC

TBAC 120 VAC POWER TBAC

TB3 24 VDC TB3

FROM SHEET C1E75

HS-1A RESET

TB1

TSH-2 MOTOR TEMP SWITCH

LSH-2 SEAL LEAK DETECTOR

PUMP NO.2

TERMINAL JUNCTION BOX

REFER TO SHEET C1E67

CT

4-20mA CURRENT TRANSDUCER

RRST2

M2

PUMP NO. 2 PROTECTION MODULE

LAH-2 SL2

TAH-2 MTH2

RMSL2

RMTH2

IE-2 MOTOR OVERLOAD RELAY (MOR) (SEE NOTE 1)

RMOR2

HS-2 H-O-A

RPLM2

YI-2 RUN

TB2

I0.11 PUMP NO.2 HIGH TEMP ALARM

AI.3 PUMP NO.2 MOTOR CURRENT

I0.12 PUMP NO.2 MOTOR OVERLOAD ALARM

I0.13 PUMP NO.2 IN HAND

I1.0 PUMP NO.2 IN AUTO

Q0.3 PUMP NO.2 PLC START/STOP

I1.1 PUMP NO.2 RUN

I1.2 PUMP NO.2 SEAL FAILURE ALARM

NOTES:

1. MOTOR OVERLOAD RELAY OUTPUT CONTACT SHOWN IS NORMALLY CLOSED WHEN RELAY IS DE-ENERGIZED, OPEN WHEN ENERGIZED, AND CLOSED WHEN IN ALARM. VERIFY OPERATION OF RELAY PROVIDED AND ADJUST CONNECTION OF RMOR AUXILIARY RELAYS.
2. SEE SHEET C1E65 FOR EQUIPMENT AND DEVICE SCHEDULE.
3. ALL FLOAT CONTROL CIRCUIT WIRES COLOR SHALL BE YELLOW.

LEGEND

- △ DEVICE OR FIELD TERMINAL LOCATED AT MOTOR
- ✳ DEVICE OR FIELD TERMINAL LOCATED REMOTE
- □ DEVICE OR FIELD TERMINAL LOCATED AT MCC/POWER PANEL
- ■ FIELD TERMINAL LOCATED AT CONTROL PANEL
- ▲ REMOTE TERMINAL
- ● DEVICE TERMINAL NO.
- ◆ PLC INTERFACE TERMINAL

HATCH
750 TOWN & COUNTRY BLVD
SUITE 650
HOUSTON, TX 77024
P: 832-930-7670
TX FIRM NUMBER: F-314

SURVEYED BY:
AMANI ENGINEERING, INC.
FB NO. P-6357

STATE OF TEXAS
GUY N SEVERN
105809
LICENSED PROFESSIONAL ENGINEER
7/21/2026

CITY OF HOUSTON
HOUSTON PUBLIC WORKS

LIFT STATION RENEWAL & REPLACEMENT PROJECT
BROOKLET LS

PUMP NO.2 CONTROL WIRING DIAGRAM

WBS NUMBER
R-000267-0173-4
DRAWING SCALE
AS NOTED
CITY OF HOUSTON PM
NUPUR KRISHNAN P.E. N.K.
SHEET NO. 167 OF 274

FOR CITY OF HOUSTON USE ONLY

HOUSTON PUBLIC WORKS
ACCEPTED AND FILED
82825
CITY DRAWING NUMBER
Approval Date 08/14/26
HOUSTON TX

C1E76

	DESCRIPTION	SERVICE		ROUTING			WIRE SIZE & CONDUIT SIZE
		VOLTAGE	AMPS OR HP	FROM	TO	VIA	
100	SERVICE ENTRANCE	480VAC	100A	UTILITY POWER SERVICE	METER DISCONNECT	DUCT BANK	4#2 / 1#2G, 2"C
100A	SERVICE POWER	480VAC	100A	MANUAL TRANSFER SWITCH	POWER & CONTROL CABINET	RIGID CONDUIT	4#2 / 1#2G, 2"C
100B	NORMAL/EMERGENCY POWER STATUS	24VDC	--	MANUAL TRANSFER SWITCH	POWER & CONTROL CABINET	RIGID CONDUIT	2#14, 1/2"C
101	GROUND ELECTRODE CONDUCTOR	--	--	POWER & CONTROL CABINET	GROUND FIELD	RIGID CONDUIT	1#6G
105	COMMUNICATION	--	--	COMMUNICATION POLE	PPU-AC PANEL	DUCT BANK / RIGID CONDUIT	ETHERNET CABLE, 2"C / 1/2"C.
105A	COMMUNICATION POLE LIGHT (EXISTING)	120V	--	POLE SWITCH LIGHT (OUTSIDE)/LIGHTING PANEL	COMMUNICATION POLE LIGHTING SWITCH	DUCT BANK / RIGID CONDUIT	2#12 / 1#12G, 2"C / 1/2"C.
200	PUMP NO. 1 POWER	480VAC	20 HP	PUMP NO. 1	PUMP NO. 1 JUNCTION BOX	RIGID CONDUIT	MFR CABLE, 2-1/2"C (SEE NOTE 2)
201	PUMP NO. 1 CONTROLS	120V	--	PUMP NO. 1	PUMP NO. 1 JUNCTION BOX	RIGID CONDUIT	INCL MFR CABLE, 2-1/2"C (SEE NOTE 2)
202	PUMP NO. 1 POWER	480VAC	20 HP	PUMP NO. 1 JUNCTION BOX	PUMP STARTER (POWER & CONTROL CABINET)	RIGID CONDUIT	3#10 / 1#10G, 1/2"C
203	COMBINED PUMP CONTROLS	120V		PUMP NO. 1 JUNCTION BOX	PUMP STARTER (POWER & CONTROL CABINET)	RIGID CONDUIT	(COMBINE 201 & 301) 8#14, 1"C
300	PUMP NO. 2 POWER	480VAC	20 HP	PUMP NO. 2	PUMP NO. 2 JUNCTION BOX	RIGID CONDUIT	MFR CABLE, 2-1/2"C (SEE NOTE 2)
301	PUMP NO. 2 CONTROLS	120V	--	PUMP NO. 2	PUMP NO. 2 JUNCTION BOX	RIGID CONDUIT	INCL MFR CABLE, 2-1/2"C (SEE NOTE 2)
302	PUMP NO. 2 POWER	480VAC	20 HP	PUMP NO. 2 JUNCTION BOX	PUMP STARTER (POWER & CONTROL CABINET)	RIGID CONDUIT	3#10 / 1#10G, 1/2"C
602	LIGHTING PANEL FEEDER	120/240V	--	POWER & CONTROL CABINET	LIGHTING PANEL	RIGID CONDUIT	3#12 / 1#12G, 1/2"C
1000	LEVEL TRANSMITTER LT-1	24VDC	--	LEVEL TRANSMITTER LT-1	TRANSMITTER JUNCTION BOX	RIGID CONDUIT	INCL IN MFR CABLE, 2-1/2"C (SEE NOTE 2)
1001	LEVEL TRANSMITTER LT-2	24VDC	--	LEVEL TRANSMITTER LT-2	TRANSMITTER JUNCTION BOX	RIGID CONDUIT	INCL IN MFR CABLE, 2-1/2"C (SEE NOTE 2)
1002	COMBINED LEVEL TRANSMITTERS & FLOAT SWITCH	24VDC	--	POWER & CONTROL CABINET	TRANSMITTER JUNCTION BOX	RIGID CONDUIT	COMBINE 1000/1001/1003, 4#14+2#14G / 4#14, 2"C
1003	WELL FLOAT SWITCHES	24VDC	--	FLOAT SWITCH NO.1 & NO.2	TRANSMITTER JUNCTION BOX	RIGID CONDUIT	MFR CABLE, 2-1/2"C (SEE NOTE 2)
1100	120VAC FOR RECEPTACLE	120V	--	LIGHTING PANEL	RECEPTACLE NEXT TO LEVEL TRANSMITTER J-BOX	RIGID CONDUIT	L3 2#12 #12G, 1/2"C
1101	COMMUNICATION POLE LIGHTING SWITCH	120V	--	LIGHTING PANEL	POLE SWITCH LIGHT (EXISTING)	RIGID CONDUIT	L2, 2#12 #12G, 1/2"C,
1102	POWER & CONTROL CABINET LIGHT	120V	--	LIGHTING PANEL	LIGHT IN POWER & CONTROL CABINET	RIGID CONDUIT	L5, 2#12 #12G, 1/2"C,
1103	COMMUNICATION PPU-AC FEEDER	120V	--	LIGHTING PANEL	PPU-AC PANEL	RIGID CONDUIT	L6, 2#12 #12G, 1/1"C,
1104	24 VDC PLC FEEDER	24VDC	--	PPU-AC PANEL /POWER DISTRIBUTION	POWER & CONTROL CABINET/TB-PPU	RIGID CONDUIT	2#14, 1/2"C
1105	ELECTRICAL PLATFORM LIGHT	120V	--	LIGHTING PANEL	SWITCH LIGHT (ELECTRICAL PLATFORM LIGHT)	RIGID CONDUIT	L4, 2#12 / 1#12G, 1/2"C / 1-1/2"C

NOTES:

1. CONDUITS LABELED "FUTURE SPACE" ARE TO BE INSTALLED AND CAPPED IN FIELD.
2. ANY CONDUIT REQUIRING A CSBE SEAL, SHALL BE A MINIMUM SIZE OF 2 1/2".
3. ALL UNDERGROUND CONDUITS (SINGLE AND MULTI-RUN) SHALL BE MINIMUM 2 INCHES AND SHALL BE ENCASED IN REINFORCED CONCRETE DUCTBANK.

NO.	DATE	REVISION	APP.

HATCH
750 TOWN & COUNTRY BLVD
SUITE 650
HOUSTON, TX 77024
P: 832-930-7670
TX FIRM NUMBER: F-314

SURVEYED BY:
AMANI ENGINEERING, INC.
FB NO. P-6357

STATE OF TEXAS
GUY N SEVERN
105809
LICENSED
PROFESSIONAL ENGINEER
7/21/2026

CITY OF HOUSTON
HOUSTON PUBLIC WORKS

LIFT STATION RENEWAL & REPLACEMENT PROJECT
BROOKLET LS

CONDUIT SCHEDULE

WBS NUMBER
R-000267-0173-4
DRAWING SCALE
AS NOTED
CITY OF HOUSTON PM
NUPUR KRISHNAN P.E. N.K.

FOR CITY OF HOUSTON USE ONLY

HOUSTON PUBLIC WORKS
ACCEPTED AND FILED
82825
CITY DRAWING NUMBER
Approval Date 08/14/26
HOUSTON TX

C1E77

SHEET NO. 168 OF 274

PLOTTED: 8/11/2026 10:58 AM
PLOT STYLE: COH.ctb
FILE PATH: \\wuspplot01\d$\Global ProjectWise Plotting - WUS\Queue 5\queue5.dwg

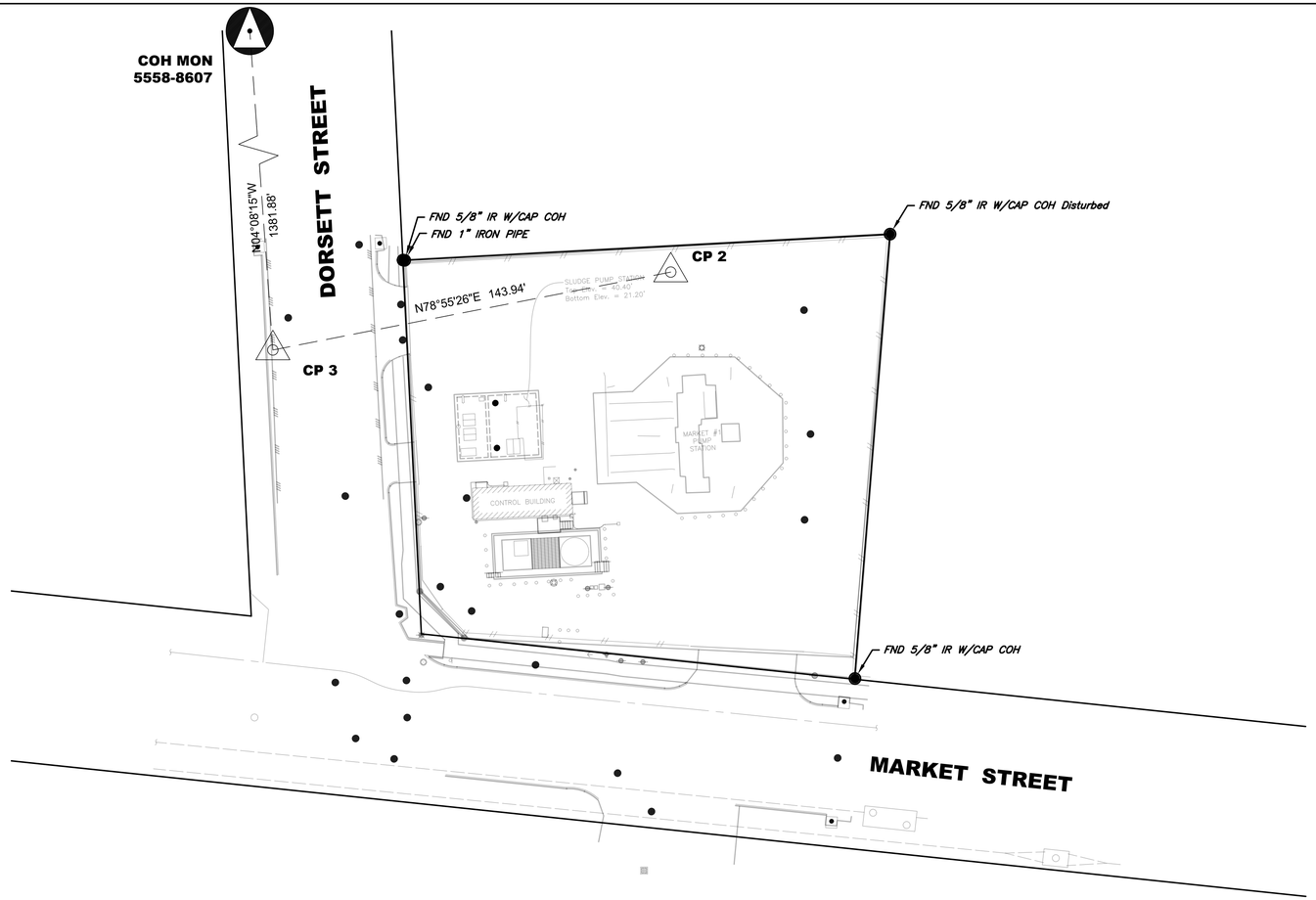

SCALE IN FEET
22 X 34 : 1" = 20'

NO.	DATE	REVISION	APP.

SURVEY NOTES:

1. ALL BEARINGS AND COORDINATES ARE BASED ON THE TEXAS COORDINATE SYSTEM, SOUTH CENTRAL ZONE (4204) NORTH AMERICAN DATUM OF 1983 (2011 ADJ) 2010 EPOCH, U.S. SURVEY FEET. COORDINATES SHOWN HEREON ARE GRID VALUES AND ALL DISTANCES SHOWN ARE SURFACE VALUES. THE COMBINED SCALE FACTOR IS 0.99989521
2. GRID COORDINATES/SCALE FACTOR = SURFACE COORDINATES.
3. FIELD DATA COLLECTED OCTOBER 2024.
4. ALL ELEVATIONS SHOWN HEREON ARE REFERENCED TO THE NORTH AMERICAN VERTICAL DATUM OF 1988 (NAVD88) GEOID 18. ALL CONTROL NETWORK ELEVATIONS ARE TIED TO CITY SURVEY 5558-8607 SITE CONTROL MONUMENT USING DIFFERENTIAL LEVELING
5. ACCORDING TO FEMA'S FLOOD INSURANCE RATE MAP (FIRM) PANEL NO. 48201C0695M. DATED 01/06/2017, THE SUBJECT PROPERTY LIES WITHIN ZONE X, OUTSIDE OF A SPECIAL FLOOD HAZARD AREA (SFHA). APPROXIMATE LIMITS (IF SHOWN) ARE BASED ON AVAILABLE SHAPE FILES PROVIDED BY FEMA. THIS FLOOD STATEMENT IS BASED ON ENGINEERING INFORMATION PROVIDED BY FEMA AND SHALL NOT CREATE LIABILITY ON THE PART OF THE SURVEYOR.

PROJECT BENCH MARK:

A BRASS DISK LOCATED ON THE SOUTHWEST CORNER OF LYONS AVE. AND DORSETT ST. INTERSECTION. OBSERVED ELEVATION = 40.65' (NAVD 88 GEOID 18)

CP 2 -- X-CUT

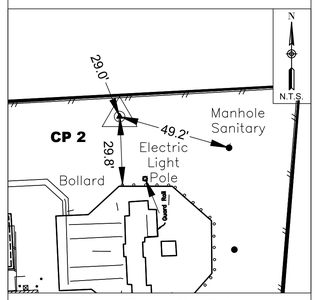

GRID NORTHING : 13,847,298.61
GRID EASTING : 3,146,217.61

CP 3 -- MAG NAIL

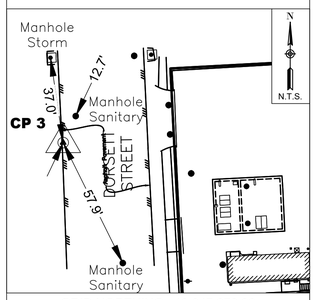

GRID NORTHING : 13,847,270.96
GRID EASTING : 3,146,076.36

CP No.	Grid Northing	Grid Easting	Elevation	Description
2	13,847,298.61	3,146,217.61	39.71	X-CUT
3	13,847,270.96	3,146,076.36	37.70	MAG NAIL

CITY OF HOUSTON

CITY SURVEY 5558-8607
SITE CONTROL MONUMENT

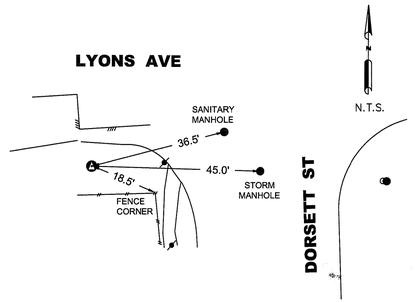

Project WBS# R-000267-0175-3
Texas Coordinate System of 1983, South Central Zone, U. S. Survey Feet
X= 3,145,976.67
Y= 13,848,649.09
Lat.= N 29° 46' 36.1737"
Lon.= W 95° 17' 15.3778"

Keymap Page: 495B
Orthometric Elevation = 40.65
Ellipsoid Height= -48.96
Geoid: GEOID 18
Datum Source & Adjustment:
2-HR STATIC GPS OBSERVATION
MADE ON MONUMENT ON 10/29/2024

Reference Frame Used: NAD_83(2011)(EPOCH: 2010.0000)
Vertical Adjustment used: NAVD 88 GEOID18
General Location: THE SOUTHWEST CORNER OF LYONS AVE. AND DORSETT ST. INTERSECTION.

Date Set: MAY 14, 2003 Type of Mark: BRASS DISK

3 Nearest project control points (bearings and distances stated below):
1. CP #2, X-CUT, S 10° 06' 57" E, 1371.95'
2. CP #1, MAG NAIL , S 4° 08' 15" E, 1381.88'
3. CP #4, X-CUT , S 5° 27' 17" E, 1541.04'

NOTE:
1. Bearings are grid bearings.
2. Combined Factor (C.F)= 0.99989521.

Surface= Grid / C.F.

Surveyed By: Amani Engineering, Inc.
11011 Richmond Avenue, Suite 700
Houston, TX 77042
Tel. (713)270-5700
Texas Registered Survey Firm 10028200

STATE OF TEXAS
REGISTERED
CHRISTINA I. WEAVER
6753
PROFESSIONAL
LAND SURVEYOR
8.12.25

P:\Cadd\2024\24013 - Hatch - COH FY20 Lift Stations\Monument\NE Sludge Transfer LS\5558-8607.dwg

F1C29

AMANI ENGINEERING, INC.
11011 RICHMOND AVENUE
SUITE 700
HOUSTON, TEXAS 77024
TEL: (713) 270-5700
TBPE REG. NO. F-4528
TBPELS REG. NO. 1028200

HATCH
750 TOWN & COUNTRY BLVD.
SUITE 650
HOUSTON, TEXAS 77024
P:832-930-7670
TX FIRM NUMBER: F-314

SURVEYED BY:
AMANI ENGINEERING,INC.
FB NO. P-6357

STATE OF TEXAS
REGISTERED
WILLIAM H. REIMER III
4044
PROFESSIONAL
LAND SURVEYOR
06-05-2026

CITY OF HOUSTON
HOUSTON PUBLIC WORKS

LIFT STATION RENEWAL & REPLACEMENT PROJECT

NE SLUDGE TRANSFER LIFT STATION
SURVEY CONTROL MAP

WBS NUMBER	FOR CITY OF HOUSTON USE ONLY
R-000267-0173-4	HOUSTON PUBLIC WORKS ACCEPTED AND FILED 82825 CITY DRAWING NUMBER Approval Date 08/14/26 HOUSTON TX
DRAWING SCALE	
1" = 20'	
CITY OF HOUSTON PM	
NUPUR KRISHNAN P.E. N.K.	
SHEET NO. 169 OF 274	

FILE PATH: P:\Cadd\2024\24013 - Hatch - COH FY20 Lift Stations\CAD_DWG\Survey Control Drawings\Control-NE Sludge Transfer LS..dwg

0 1 2 3 ORIGINAL SCALE IN INCHES FOR REDUCED PLANS

LEGEND

CB	CHORD BEARING
CD	CHORD DISTANCE
ESMT	EASEMENT
HCCF	HARRIS COUNTY CLERK FILE
HCDR	HARRIS COUNTY DEED RECORDS
HCMR	HARRIS COUNTY MAP RECORDS
FC	FILM CODE
NO	NUMBER
POB	POINT OF BEGINNING
POC	POINT OF COMMENCEMENT
PROP	PROPOSED
PG	PAGE
ROW	RIGHT OF WAY
SEC	SECTION
VOL	VOLUME
PG	PAGE
WLE	WATER LINE EASEMENT
( )	CALLED DIMENSION
IR	IRON ROD
IP	IRON PIPE
FND	FOUND
AC	ACRE
R	RIGHT

SYMBOL LEGEND	
◉	FOUND IRON ROD
⊙	FOUND IRON PIPE
⊗	SET 'X' CUT
○	SET 5/8" IRON ROD CAPPED 'AMANI'

AWAD PROPERTIES WAREHOUSE AT BORSETT
SUBDIVISION OF 14.357 AC
(FC 698563 HCMR)

DORSETT STREET
(Called 60' ROW)
(Vol. 215, Pg. 392 HCDR)

1" IR Fnd (N86°56'52"E-0.57' & 0.11'R)
5/8" IR Fnd Capped "CITY OF HOUSTON"
0.9' Concrete Corner
1.4' Fence Corner
(N86°56'52"E-173.23')
N86°56'52"E 173.17'
5/8" IR Fnd Capped "CITY OF HOUSTON" Disturbed
1.1' Fence Corner
0.7' Concrete Corner
Concrete Sidewalk 1.7'
Manhole 1.6'
Manhole 1.6'
(N02°54'59"W)
N02°53'51"W 142.89'
REMAINDER OF CALLED 16.6450 AC
CITY OF HOUSTON
(HCCF K583173 and Corrected in HCCF R330509)
LESS AND EXCEPT CALLED 14.357 AC
HMR GROUP PROPERTY HOLDINGS, LLC
(HCCF RP-2017-75521)
S04°31'08"W 158.29'
(S04°28'40"W-158.56')
X-Cut Fnd at
49.66' - 0.79R
passing (50.00')
1.1' Fence Corner
Concrete Sidewalk 1.6'
0.6' Concrete Corner
Power Pole 0.2'
POB
X-Cut Set in Conc.
GRID X = 3,146,129.79
GRID Y = 13,847,160.18
0.6727 Acres
(± 29,303 Sq Ft)
3.1' Manhole
2.1' Concrete Sidewalk
1.2' Concrete Corner
0.7' Fence Corner
Traffic Sign 1.5'
Concrete Sidewalk 2.5'
Back of Curb 0.5'
CALLED 2,695 Sq Ft
CITY OF HOUSTON
(HCCF J109429)
Back of Curb 0.4'
5/8" IR Fnd Capped "CITY OF HOUSTON"
(S84°06'32"W-403.24')
S84°04'04"E 403.23'
N84°04'04"W 557.79'
North Line 60' ROW
North Line 50' ROW
Southerly Southeast corner 14.357 Ac
Southerly Southeast corner 16.6450 Ac
2.5' Concrete Sidewalk
1.7' Fence Corner
2.0' Fence Corner
5/8" IR Set Capped "AMANI"
S02°49'51"E 10.12'
(S02°50'34"W)
5/8" IR Set Capped "AMANI"
City of Houston
Called 0.0745 Ac Tract
(HCCF W029739)
for additional 10ft ROW
Concrete Sidewalk 3.0'
South Line 50' ROW
MARKET STREET
(Called 60' ROW)
Commissioners Court Minutes
Vol. 1, Pg. 276, Tract 15 (1892)
Houston Infill Industrial Investors II, LLC
Called 13.593 Ac
(HCCF RP-2021-339441)
McCARTY BUSINESS CENTER
SUBDIVISION
(FC 516144 HCMR)

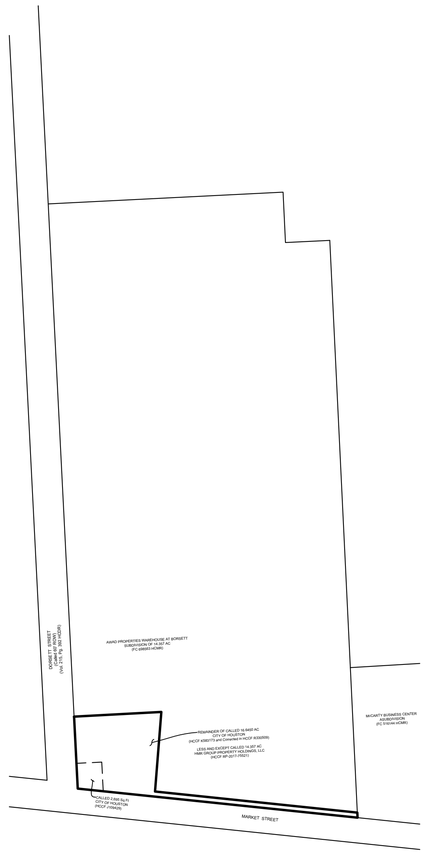

PARENT TRACT SCALE 1" = 150'

N

30 15 0 30

1" = 30' (22"x34")
1" = 60' (11"x17")

A SURVEY OF 0.6727 ACRES OF LAND, SITUATED IN THE JOHN BROWN SURVEY, ABSTRACT NO. 8, HARRIS COUNTY, TEXAS BEING ALL OF A CALLED 2,695 SQ. FT TRACT RECORDED IN HCCF J109429 AND A REMAINDER OF A CALLED 16.6450 AC TRACT RECORDED IN HCCF R330509, LESS AND EXCEPT A CALLED 14.357 AC AS RECORDED IN HCCF RP-2017-75521 OF HARRIS COUNTY, TEXAS.

NOTES:

1. ALL BEARINGS AND COORDINATES ARE BASED ON THE TEXAS COORDINATE SYSTEM, SOUTH CENTRAL ZONE (4204) NORTH AMERICAN DATUM OF 1983 (2011 ADJ) 2010 EPOCH. COORDINATES SHOWN HEREON ARE GRID VALUES AND ALL DISTANCES SHOWN ARE SURFACE VALUES.THE COMBINED SCALE FACTOR IS 0.99989382.
2. GRID COORDINATES/SCALE FACTOR = SURFACE COORDINATES.
3. HORIZONTAL COORDINATES BASED ON GPS FIELD DATA COLLECTED DECEMBER, 2023.
4. THE SURVEYOR HAS NOT ABSTRACTED THE SUBJECT PROPERTY. ABSTRACT CERTIFICATES WERE PROVIDED BY ABSTRACT SERVICES OF HOUSTON, GF NO. 7910-24-0361 DATED JANUARY 22, 2024
5. SURVEY WAS PREPARED WITHOUT BENEFIT OF CURRENT TITLE COMMITMENT AND MAY NOT SHOW ALL ENCUMBRANCES ON SITE.

THIS SURVEY SUBSTANTIALLY COMPLIES WITH THE CURRENT TEXAS SOCIETY OF PROFESSIONAL SURVEYORS MANUAL OF PRACTICE REQUIREMENTS FOR A CATEGORY 1B, CONDITION 2, STANDARD LAND SURVEY.

THE FIELD WORK WAS COMPLETED APRIL 2025.

WILLIAM H. REIMER III
REGISTERED PROFESSIONAL LAND SURVEYOR NO. 4044
AMANI ENGINEERING, INC.
11011 RICHMOND AVE. SUITE 700
HOUSTON, TEXAS 77042
TEL 713.270.5700
TEXAS REGISTERED SURVEYING FIRM No. 100282-00

AMANI ENGINEERING, INC.
11011 RICHMOND AVENUE, SUITE 700
HOUSTON, TEXAS 77042
TEL: (713) 270--5700
Texas Registered Engineering Firm No. F--4528
Texas Registered Surveying Firm No.100282--00

STATE OF TEXAS
REGISTERED
WILLIAM H. REIMER III
4044
PROFESSIONAL
LAND SURVEYOR

William H. Reimer III
08-22-2025

HOUSTON
PUBLIC WORKS
ACCEPTED AND FILED
82825
CITY DRAWING NUMBER
Approval Date 08/14/26
HOUSTON TX

PLOTTED: 5/14/2026 7:49 AM
PLOT STYLE: ----
FILE PATH: \\wuspplot01\d$\Global ProjectWise Plotting - WUS\Queue 5\queue5.dwg

24" STORM SEWER
24" STORM SEWER
48" Stm Swr
SLUDGE PUMP STATION
TOP ELEV. = 40.40'
BOTTOM ELEV. = 21.20'
36" SAN SEWER
ASPHALT PAVEMENT
30" SAN FM
12" SLUDGE FM
10" SLUDGE FM
EXISTING NE SLUDGE
TRANSFER PUMP STATION
8" SAN SEWER
SCRUBBER
MARKET #1
PUMP
STATION
36" SAN SEWER
54"
SAN
SEWE
CONTROL BUILDING
42" SAN SEWER
CENTERPOINT ENERGY
12" HP STL GAS MAIN
30" SAN FM
8" SAN SEWER
12" SAN SEWER
42" SAN SEWER
STORM SEWER
STORM SEWER
0 40 80 Feet

N

NOTE:

1. LS SITE IS NOT LOCATED IN THE 100 OR 500 YEAR FLOODPLAINS

NO.	DATE	REVISION	APP.

HATCH
750 TOWN & COUNTRY BLVD
SUITE 650
HOUSTON, TX 77024
P: 832-930-7670
TX FIRM NUMBER: F- 314

SURVEYED BY:
AMANI ENGINEERING, INC.
FB NO. P-6357

STATE OF TEXAS
MARK G. SCALLY
136279
LICENSED
PROFESSIONAL ENGINEER
5/14/26

CITY OF HOUSTON
HOUSTON PUBLIC WORKS

LIFT STATION RENEWAL & REPLACEMENT PROJECT
NE SLUDGE TRANSFER LS
EXISTING CIVIL TOPOGRAPHIC PLAN

WBS NUMBER	FOR CITY OF HOUSTON USE ONLY
R-000267-0173-4	
DRAWING SCALE	
AS NOTED	
CITY OF HOUSTON PM	
NUPUR KRISHNAN P.E. N.K.	
SHEET NO. 171 OF 274	

HOUSTON PUBLIC WORKS
ACCEPTED AND FILED
82825
CITY DRAWING NUMBER
Approval Date 08/14/26
HOUSTON TX

F1C31

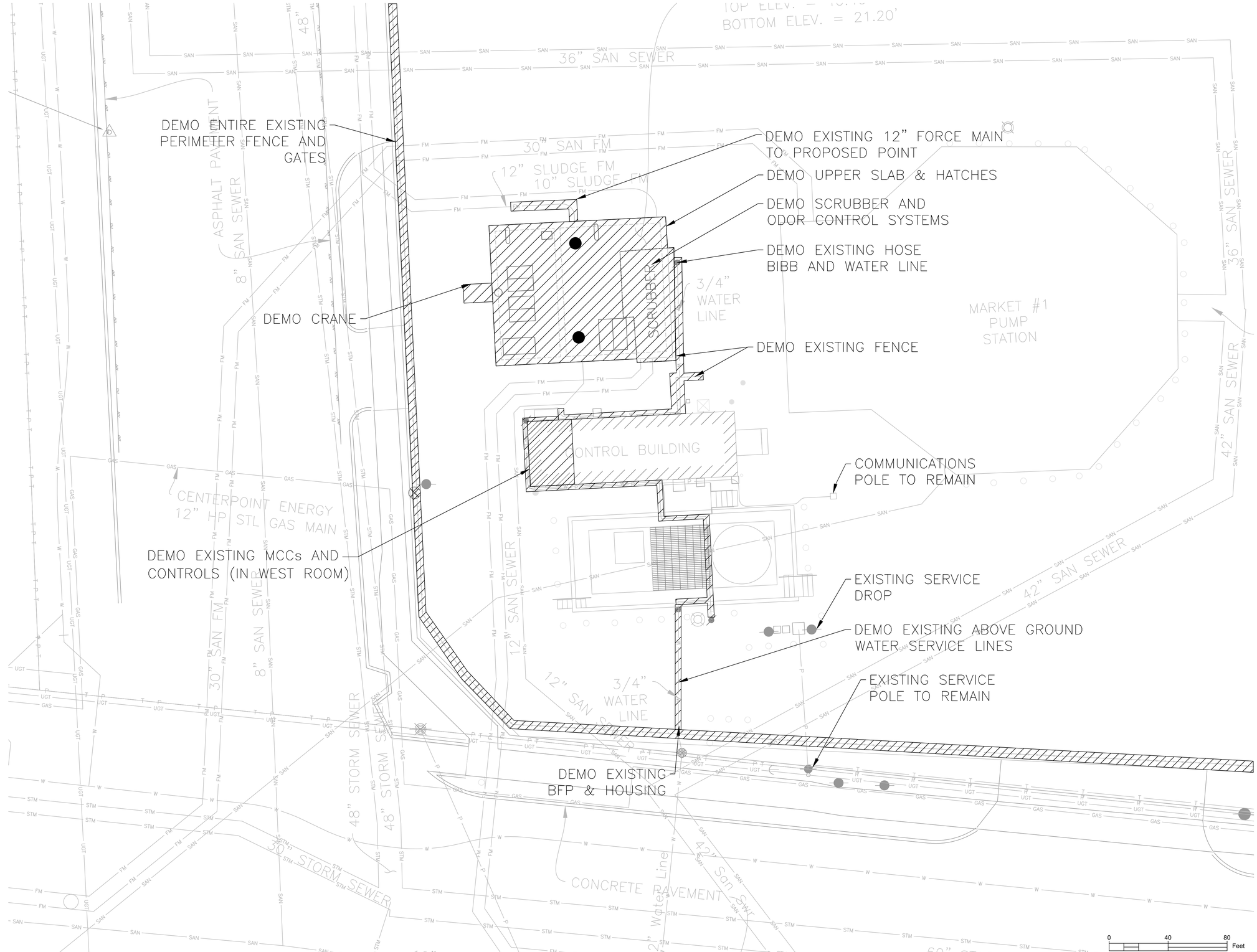

NOTE: THE CITY SHALL HAVE THE FIRST RIGHT OF REFUSAL TO RETAIN OR SALVAGE ALL ITEMS SHOWN TO BE DEMOLISHED AND/OR REMOVED, INCLUDING BUT NOT LIMITED TO PUMPS, HATCHES AND ELECTRICAL AND INSTRUMENTATION COMPONENTS. PRIOR TO INITIATING DEMOLITION WORK, THE CONTRACTOR AND THE DESIGNATED FIELD INSPECTOR SHALL MAKE A JOINT INSPECTION OF EACH SITE TO IDENTIFY ALL EQUIPMENT TO BE RETAINED BY THE CITY FOR SALVAGE OR REUSE. ITEMS IDENTIFIED FOR SALVAGE SHALL BE CAREFULLY REMOVED TO PROTECT FROM DAMAGE. ALL OTHER ITEMS SHOWN TO BE DEMOLISHED/REMOVED THAT ARE NOT RETAINED BY THE CITY SHALL BE PROPERLY REMOVED FROM THE SITE AND HANDLED PER SPECIFICATION 02220–DEMOLITION AT NO ADDITIONAL COST TO THE CITY. CONTACT DESIGNATED CITY REPRESENTATIVE (CAPITAL PROJECTS CONSTRUCTION INSPECTOR) FOR WASTEWATER TREATMENT PLANT SALVAGE AT LEAST 72 HOURS PRIOR TO DEMOLITION IN ORDER TO COORDINATE REMOVAL OF ANY ITEMS THE CITY WISHES TO CLAIM AND SALVAGE. THE CONTRACTOR SHALL DELIVER ALL SALVAGE ITEMS TO A LOCATION WITHIN THE CITY DETERMINED BY THE CITY.

NO.	DATE	REVISION	APP.

HATCH
750 TOWN & COUNTRY BLVD
SUITE 650
HOUSTON, TX 77024
P: 832-930-7670
TX FIRM NUMBER: F- 314

SURVEYED BY:
AMANI ENGINEERING, INC.
FB NO. P-6357

STATE OF TEXAS — MARK G. SCALLY — 136279 — LICENSED PROFESSIONAL ENGINEER — 3/17/26

CITY OF HOUSTON
HOUSTON PUBLIC WORKS

LIFT STATION RENEWAL & REPLACEMENT PROJECT
NE SLUDGE TRANSFER LS
CIVIL DEMOLITION PLAN

WBS NUMBER	FOR CITY OF HOUSTON USE ONLY
R-000267-0173-4	HOUSTON PUBLIC WORKS ACCEPTED AND FILED 82825 CITY DRAWING NUMBER Approval Date 08/14/26 HOUSTON TX
DRAWING SCALE	
AS NOTED	
CITY OF HOUSTON PM	
NUPUR KRISHNAN P.E. N.K.	
SHEET NO. 172 OF 274	

F1C32

PLOT STYLE: Grayscale.ctb
PLOTTED: 2/5/2026 12:25 PM
FILE PATH: C:\pwworking\hatch-dpd-south_central_us\dms511381\H374729-0400-221-258-0001.dwg

PLOTTED: 8/7/2026 2:37 PM
FILE PATH: Y:\2022071 LIFT STATIONS RENEWAL AND REPLACEMENT (HATCH) WBS NO. R-000267-0173-3\Auto CAD\Site Plan 90%\NE Sludge Topo - Site Plan\NE Sludge Site Plan.dwg

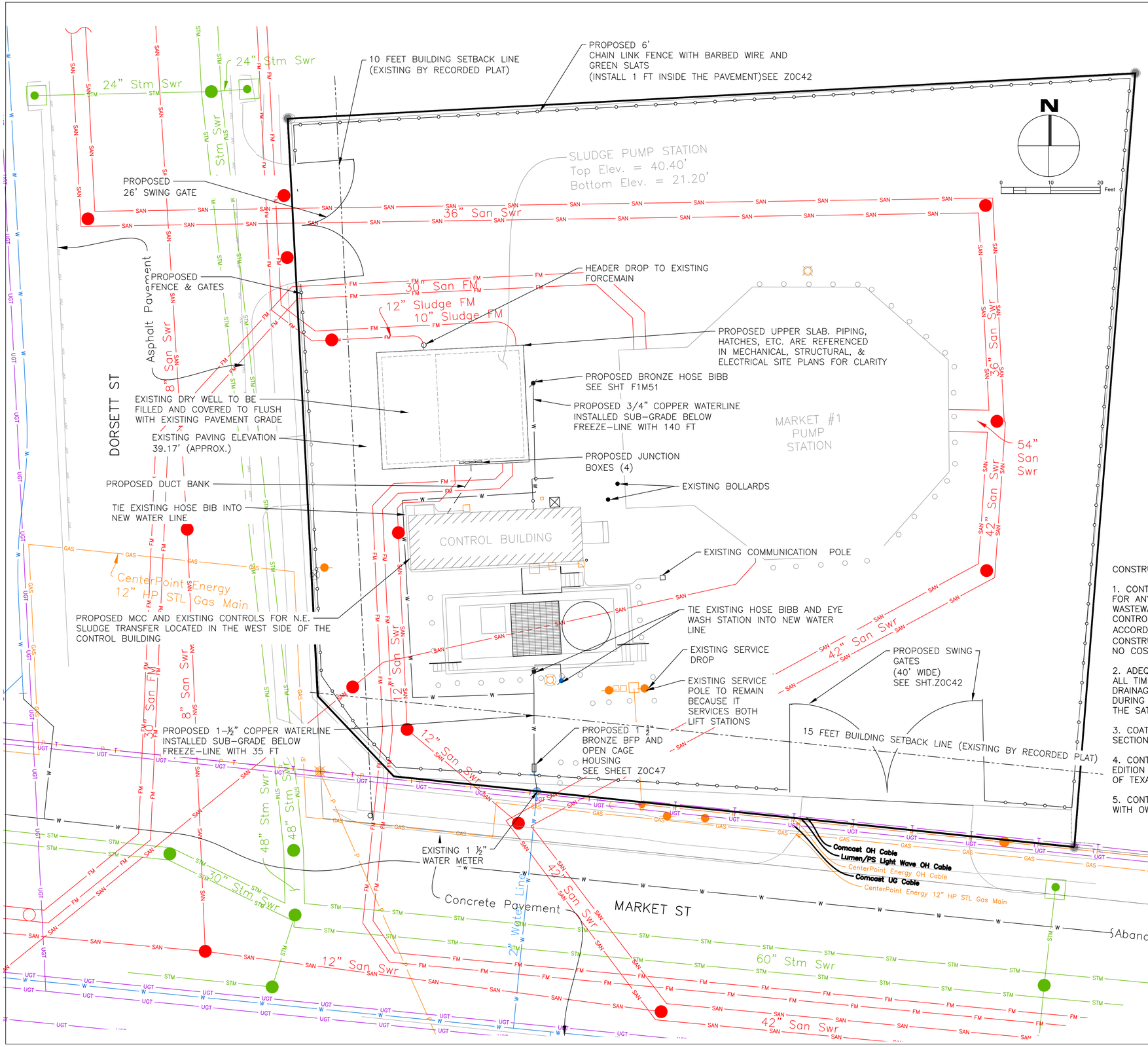

NOTES:

GENERAL

1. THIS IS A LIFT STATION REHABILITATION PROJECT (REPLACING PIPES, PUMPS, CONCRETE TOP SLAB AND HATCHES, AND ELECTRICAL FACILITIES) UNDER CONSENT DECREE FOR EARLY ACTION COMPLETION.
2. THIS PROPOSED SITE DEVELOPMENT PLAN PROVIDES A GENERAL OVERVIEW OF THE PROPOSED IMPROVEMENTS WITHIN THE SITE. PLEASE REFER TO PROPOSAL SITE PLANS FOR ELECTRICAL, MECHANICAL, AND STRUCTURAL INFORMATION CONTAINED IN THIS DRAWING SET FOR MORE DETAILED INFORMATION.

PLANNING

1. THERE ARE BUILDING SETBACK LINES (BY RECORDED PLAT) THAT IS 10' ALONG DORSETT AND 15' ALONG MARKET STREET.

PLATTING

1. THIS LIFT STATION SITE IS OUT OF RESTRICTED RESERVE "A", N.E. SLUDGE TRANSFER STATION, FILED FOR RECORD AT FC 713643, HCMR.

FLOODPLAIN

1. LS SITE IS NOT WITHIN THE 100-YEAR FLOODPLAIN.
2. EXISTING ELECTRICAL CONTROL BUILDING TO REMAIN AS-IS.

STORMWATER

1. DETENTION IS NOT REQUIRED FOR THE WORK PROPOSED.
2. LIFT STATION TRACT AREA = 22538 SF(TOTAL). EXISTING IMPERVIOUS = 100%. NO CHANGE IN IMPERVIOUS.
3. THE PROPOSED WORK WILL NOT CHANGE OR ADD ANY SHEET FLOW TO ADJACENT PROPRIETIES.
4. DETENTION NOT REQUIRED FOR THE IMPERVIOUS AREA RESULTING FROM THE PROPOSED SITE DISTURBANCE FOR THE LIFT STATION REHAB. SHEET FLOW IS A REASONABLE METHOD FOR STORMWATER DRAINAGE AT THIS SITE.

CONSTRUCTION NOTES:

1. CONTRACTOR SHALL BE FULLY RESPONSIBLE FOR ANY DAMAGES TO EXISTING WATER, WASTEWATER, STORMWATER LINES AND TRAFFIC CONTROL DEVICES. ALL DAMAGES SHALL BE IN ACCORDANCE WITH THE "STANDARD CONSTRUCTION SPECIFICATION" REFERENCED AT NO COST TO THE CITY.
2. ADEQUATE DRAINAGE SHALL BE MAINTAINED AT ALL TIMES DURING CONSTRUCTION AND ANY DRAINAGE DITCH OR STRUCTURE DISTURBED DURING CONSTRUCTION SHALL BE RESTORED TO THE SATISFACTION OF THE OWNING AUTHORITY.
3. COAT WET WELL IN ACCORDANCE WITH SPEC SECTION 09901
4. CONTRACTOR SHALL COMPLY WITH THE LATEST EDITION OF OSHA REGULATIONS AND THE STATE OF TEXAS LAWS CONCERNING EXCAVATION.
5. CONTRACTOR TO COORDINATE LAYDOWN AREA WITH OWNER.

NO.	DATE	REVISION	APP.

NOTICE:
FOR YOUR SAFETY, YOU ARE REQUIRED BY TEXAS LAW TO CALL 811 AT LEAST 48 HOURS BEFORE YOU DIG SO THAT UNDERGROUND LINES CAN BE MARKED. THIS SIGNATURE DOES NOT FULFILL YOUR OBLIGATION TO CALL 811

VERIFICATION OF PRIVATE UTILITY LINES

Mike Brower — Date 07/31/26

CenterPoint Energy natural gas utilities shown. (Gas service lines are not shown). This signature not be used for conflict verification.
Signature valid for six months.

Mike Brower — Date 07/31/26

CenterPoint Energy/UNDERGROUND Electrical Facilities Verification ONLY. (This signature verifies existing underground facilities – not to be used for conflict verification)
Signature valid for six months.

Marc F Johnson — Date 7/28/26

Approved for AT&T underground conduit facilities only.
Signature valid for one year.

FCM Engineers, PC
3300 S. Gessner Rd. Suite 249
T- 713-706-4412
F- 713-706-4410
Tx Firm No. 13481

HATCH
750 TOWN & COUNTRY BLVD
SUITE 650
HOUSTON, TX 77024
P: 832-930-7670
TX FIRM NUMBER: F-314

SURVEYED BY:
AMANI ENGINEERING, INC
FB NO. P-6357

STATE OF TEXAS — FRANK C. MBACHU — 108363 — LICENSED PROFESSIONAL ENGINEER — 8/23/2026

CITY OF HOUSTON
HOUSTON PUBLIC WORKS

LIFT STATION RENEWAL & REPLACEMENT PROJECT
N.E. SLUDGE TRANSFER LIFT STATION PROPOSED CIVIL SITE DEVELOPMENT PLAN

WBS NUMBER	R-000267-0173-4
DRAWING SCALE	AS NOTED
CITY OF HOUSTON PM	NUPUR KRISHNAN P.E. N.K.
SHEET NO.	173 OF 274

FOR CITY OF HOUSTON USE ONLY

HOUSTON PUBLIC WORKS
ACCEPTED AND FILED
82825 CITY DRAWING NUMBER
Approval Date 08/14/26
HOUSTON TX

F1C33

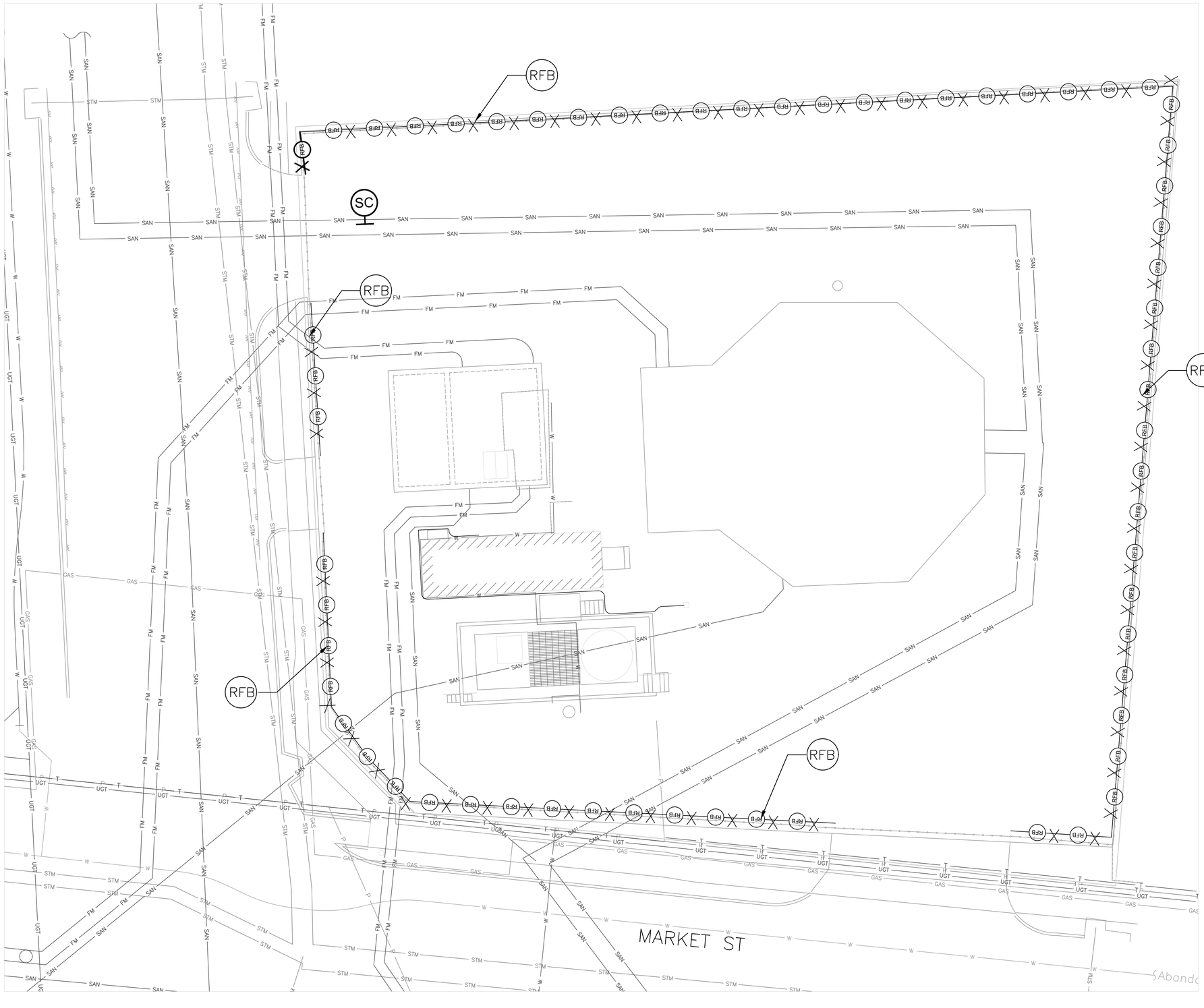

N

0' 10' 20'

NO.	DATE	REVISION	APP.

LEGEND :

- RFB — REINFORCED FILTER FABRIC BARRIER.
- IPB2 — INLET PROTECTION BARRIER.
- SC — STABILIZED CONSTRUCTION ACCESS

NOTES:

1. STORM WATER POLLUTION PLAN CONFORM TO SPECIFICATIONS AND DRAWINGS.
2. ALL DISTURBED AREAS THAT ARE NOT PAVED OR COVERED BY STRUCTURE SHALL BE SODDED OR HYDROMULCH SEEDED.
3. CONTRACTOR'S LAY DOWN/STORAGE AREA SHALL HAVE A STABILIZED CONSTRUCTION EXIT.
4. SEE SHEET Z0G06 FOR STORM WATER POLLUTION PREVENTION PLAN NOTES AND DETAILS.
5. CONTRACTOR SHALL PROVIDE A STABILIZED CONSTRUCTION EXIT, INCLUDING TRUCK WASHING AREA, VERIFIED IN THE FIELD AND AUTHORIZED BY ENGINEER.

FCM Engineers, PC
3300 S. Gessner Rd.
Suite 249
T- 713-706-4412
F- 713-706-4410
Tx Firm No. 13481

HATCH
750 TOWN & COUNTRY BLVD
SUITE 650
HOUSTON, TX 77024
P: 832-930-7670
TX FIRM NUMBER: F-314

STATE OF TEXAS
FRANK C. MBACHU
108363
LICENSED
PROFESSIONAL ENGINEER
3/23/2026

SURVEYED BY:
AMANI ENGINEERING, INC
FB NO. P-6357

CITY OF HOUSTON
HOUSTON PUBLIC WORKS

LIFT STATION RENEWAL & REPLACEMENT PROJECT
N.E. SLUDGE TRANSFER LIFT STATION
CIVIL SWPPP

WBS NUMBER	FOR CITY OF HOUSTON USE ONLY
R-000267-0173-4	HOUSTON PUBLIC WORKS ACCEPTED AND FILED 82825 CITY DRAWING NUMBER Approval Date 08/14/26 HOUSTON TX
DRAWING SCALE	
1" = 10'	
CITY OF HOUSTON PM	
NUPUR KRISHNAN P.E. N.K.	
F1C34	SHEET NO. 174 OF 274

FILE PATH: Y:\2022071 LIFT STATIONS RENEWAL AND REPLACEMENT (HATCH) WBS NO. R-000267-0173-3\Auto CAD\New SWPPP\NE Sludge Topo\N E Sludge Transfer Topographic Survey 4.22.25\BASE-SludgeTranLS.dwgPLOT STYLE: Grayscale.ctb PLOTTED: 1/28/2026 4:03

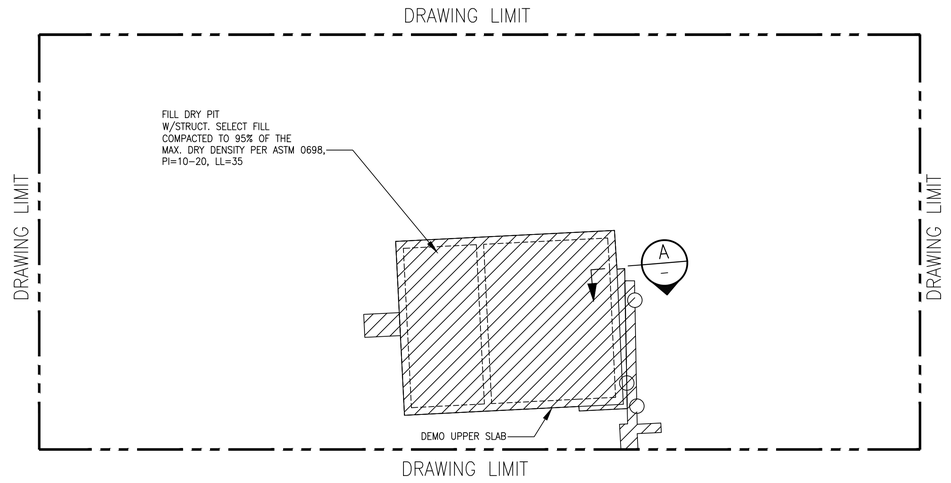

DEMO PLAN – TOP SLAB

SCALE: 1"=10'-0"

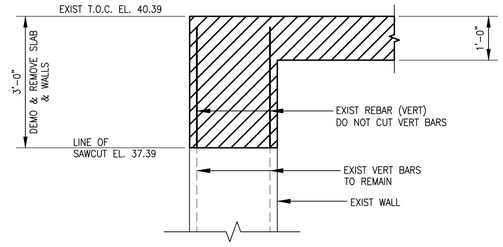

A: TYPICAL DEMO SECTION

SCALE: N.T.S

NOTE:
DO NOT CUT VERT. REBAR DURING WALL DEMO CUT OR DAMAGED EXIST VERT REBAR SHALL BE REPLACED WITH SAME SIZE REBAR, DRILL AND EPOXY REBAR 12" INTO EXIST WALL.

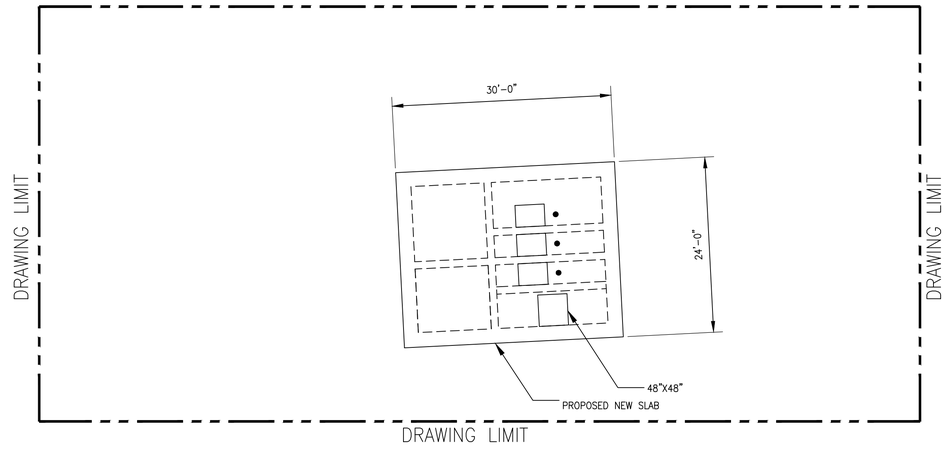

NEW PLAN LAYOUT – TOP SLAB

SCALE: 1"=10'-0"

NOTE:

THE CITY SHALL HAVE THE FIRST RIGHT OF REFUSAL TO RETAIN OR SALVAGE ALL ITEMS SHOWN TO BE DEMOLISHED AND/OR REMOVED, INCLUDING BUT NOT LIMITED TO PUMPS, HATCHES, AND ELECTRICAL AND INSTRUMENTATION COMPONENTS. PRIOR TO INITIATING DEMO WORK, THE CONTRACTOR AND THE DESIGNATED FIELD INSPECTOR SHALL MAKE A JOINT INSPECTION OF EACH TO IDENTIFY ALL EQUIPMENT TO BE RETAINED BY THE CITY FOR SALVAGE AND REUSE. ITEMS IDENTIFIED FOR SALVAGE SHALL BE CAREFULLY REMOVED TO PROTECT FROM DAMAGE. ALL OTHER ITEMS SHOWN TO BE DEMOLISHED / REMOVED THAT ARE NOT RETAINED BY THE CITY SHALL BE PROPERLY REMOVED FROM THE SITE AND HANDLED PER SPECIFICATIONS AT NO ADDITIONAL COST TO THE CITY. CONTACT CITY DESIGNATED CITY REPRESENTATIVE FOR WASTEWATER TREATMENT PLANT SALVAGE AT LEAST 72 HOURS PRIOR TO DEMOLITION IN ORDER TO COORDINATE REMOVAL OF ANY ITEMS THE CITY WISHES TO CLAIM AND SALVAGE. THE CONTRACTOR SHALL DELIVER ALL SALVAGE ITEMS TO A LOCATION WITHIN THE CITY DETERMINED BY THE CITY.

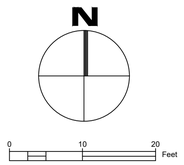

NO.	DATE	REVISION	APP.

FCM Engineers, PC
3300 S. Gessner Rd.
Suite 249
T- 713-706-4412
F- 713-706-4410
Tx Firm No. 13481

HATCH
750 TOWN & COUNTRY BLVD
SUITE 650
HOUSTON, TX 77024
P: 832-930-7670
TX FIRM NUMBER: F-314

SURVEYED BY:
AMANI ENGINEERING, INC
FB NO. P-6357

STATE OF TEXAS
CHARLES C.A. MGBEIKE
73307
LICENSED PROFESSIONAL ENGINEER
05/19/26

CITY OF HOUSTON

HOUSTON PUBLIC WORKS

LIFT STATION RENEWAL & REPLACEMENT PROJECT

N.E. SLUDGE TRANSFER LIFT STATION
PROPOSED DEMOLITION & STRUCTURAL PLAN

WBS NUMBER	FOR CITY OF HOUSTON USE ONLY
R-000267-0173-4	
DRAWING SCALE	
AS NOTED	
CITY OF HOUSTON PM	
NUPUR KRISHNAN P.E. N.K.	
F1S16	SHEET NO. 175 OF 274

HOUSTON PUBLIC WORKS
ACCEPTED AND FILED
82825
CITY DRAWING NUMBER
Approval Date 08/14/26
HOUSTON TX

PLOT STYLE: Monochrome.ctb PLOTTED: 7/27/2026 5:45 AM
FILE PATH: C:\Users\francis.ineagwara\Desktop\FOI\Lift Station\CAD\MBK\NE Sludge\FINAL\NE Sludge Demo Constr.dwg

PLOT STYLE: Monochrome.ctb PLOTTED: 8/10/2026 8:14 PM
FILE PATH: C:\Users\francis.iheagwara\Desktop\FOI\Lift Station\CAD\MBK\NE Sludge\FINAL\NE Sludge New Slab.dwg

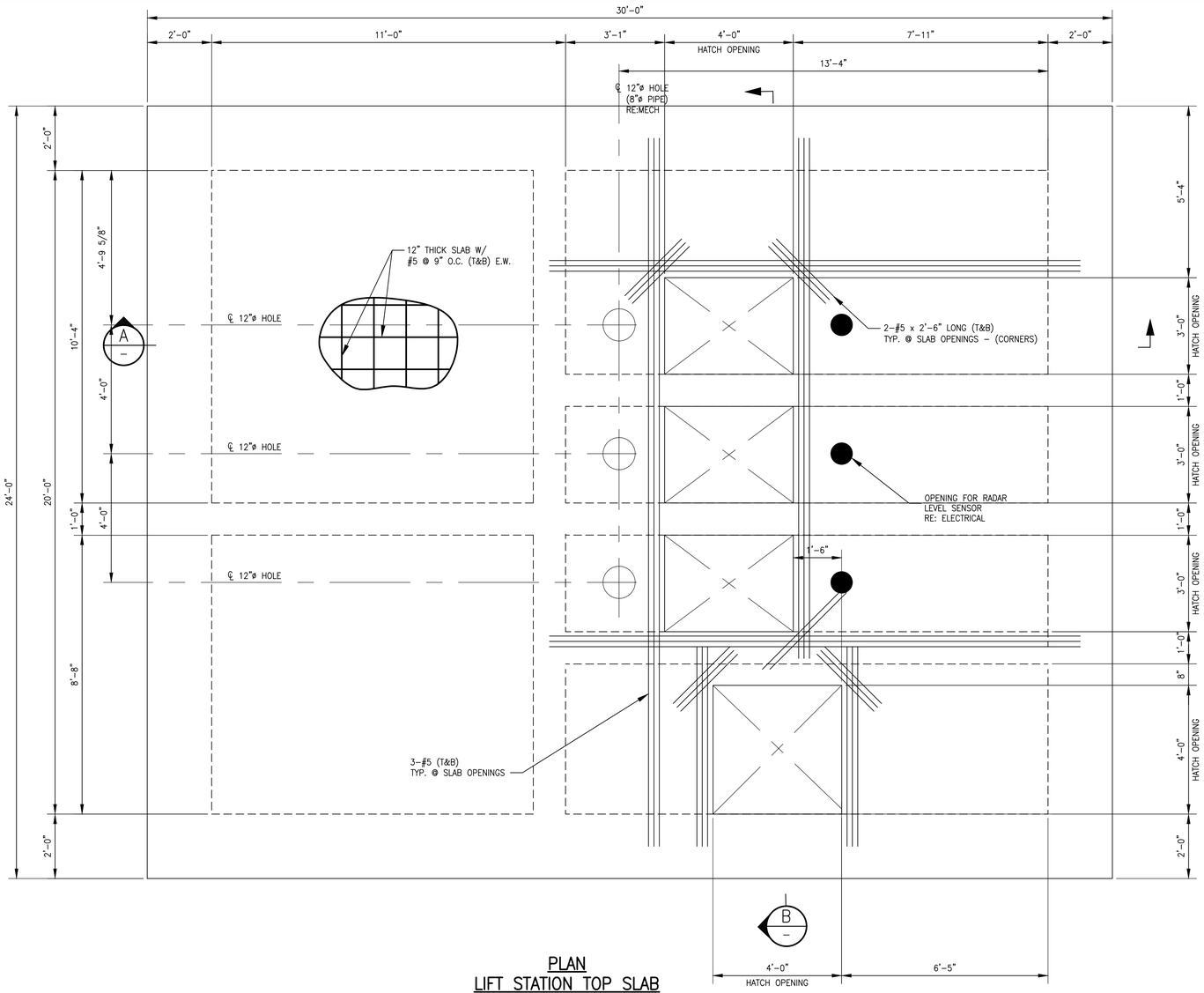

PLAN
LIFT STATION TOP SLAB
SCALE: 1/2" = 1'-0"

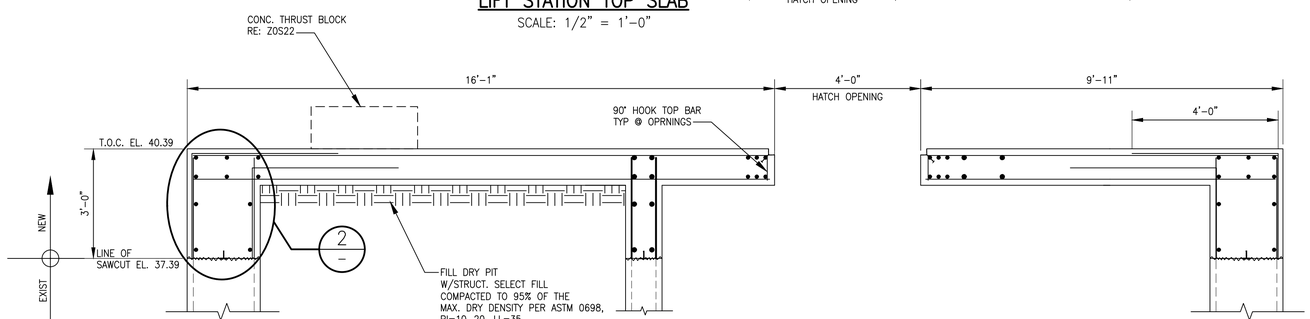

SECTION
SCALE: 1/2" = 1'-0" (A)

NOTE:

1. REFER TO SHEET ZOS21 FOR STRUCTURAL GENERAL NOTES
2. REFER TO MECHANICAL/VENDOR DRAWINGS FOR WATERPROOF HATCHES/MANHOLES HATCHES SHALL BE SIZED PER PUMP MANUFACTURER AND SHALL BE FLUSHED WITH THE PROPOSED TOP SLAB
3. CONTRACTOR SHALL FIELD VERIFY AND COORDINATE ALL DIMENSION W/MEP & CIVIL PLANS PRIOR TO BIDDING WORK.
4. REFER TO ELECTRICAL FOR RADAR LEVEL SENSOR OPENINGS & MECHANICAL DRAWING FOR OTHER PIPE PENETRATIONS, CONDUITS, VENTS ETC.
5. REFER TO SPECS 09901 FOR WET WELL WALL CLEANING & COATING SPECS.
6. REFER TO COH STD DETAILS ZOS22, 23, 24, 25, 26.

NO.	DATE	REVISION	APP.

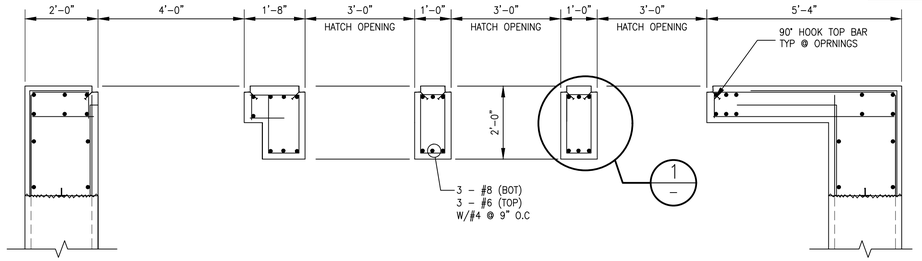

SECTION
SCALE: 1/2" = 1'-0" (B)

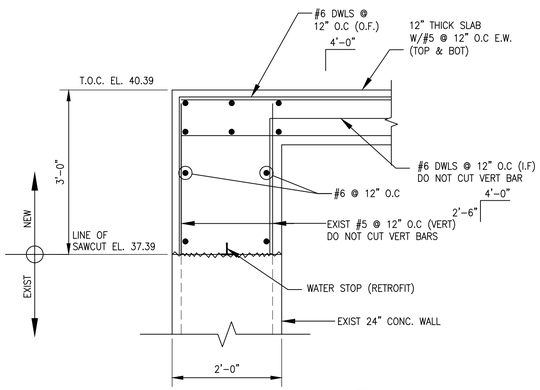

DETAIL
SCALE: 3/4" = 1'-0" (2)

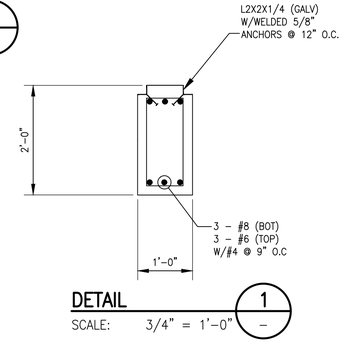

DETAIL
SCALE: 3/4" = 1'-0" (1)

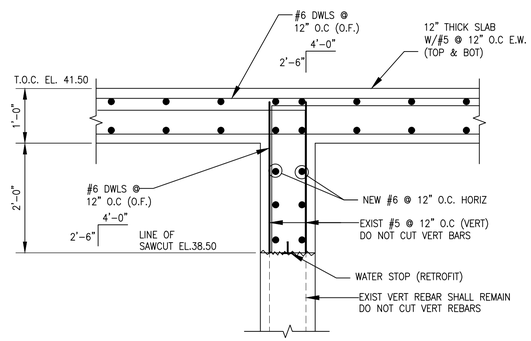

TYPICAL INTERIOR WALL DETAIL

FCM Engineers, PC
3300 S. Gessner Rd.
Suite 249
T- 713-706-4412
F- 713-706-4410
Tx Firm No. 13481

HATCH
750 TOWN & COUNTRY BLVD
SUITE 650
HOUSTON, TX 77024
P: 832-930-7670
TX FIRM NUMBER: F-314

SURVEYED BY:
AMANI ENGINEERING, INC
FB NO. P-6357

STATE OF TEXAS · CHARLES C.A. MGBEIKE · 73307 · LICENSED PROFESSIONAL ENGINEER · 05/19/26

CITY OF HOUSTON
HOUSTON PUBLIC WORKS

LIFT STATION RENEWAL & REPLACEMENT PROJECT
N.E. SLUDGE TRANSFER LIFT STATION
PROPOSED STRUCTURAL PLAN, SECTIONS & DETAILS

WBS NUMBER	FOR CITY OF HOUSTON USE ONLY
R-000267-0173-4	HOUSTON PUBLIC WORKS ACCEPTED AND FILED 82825 CITY DRAWING NUMBER Approval Date 08/14/26 HOUSTON TX
DRAWING SCALE	
AS NOTED	
CITY OF HOUSTON PM	
NUPUR KRISHNAN P.E.	

F1S17 SHEET NO. 176 OF 274

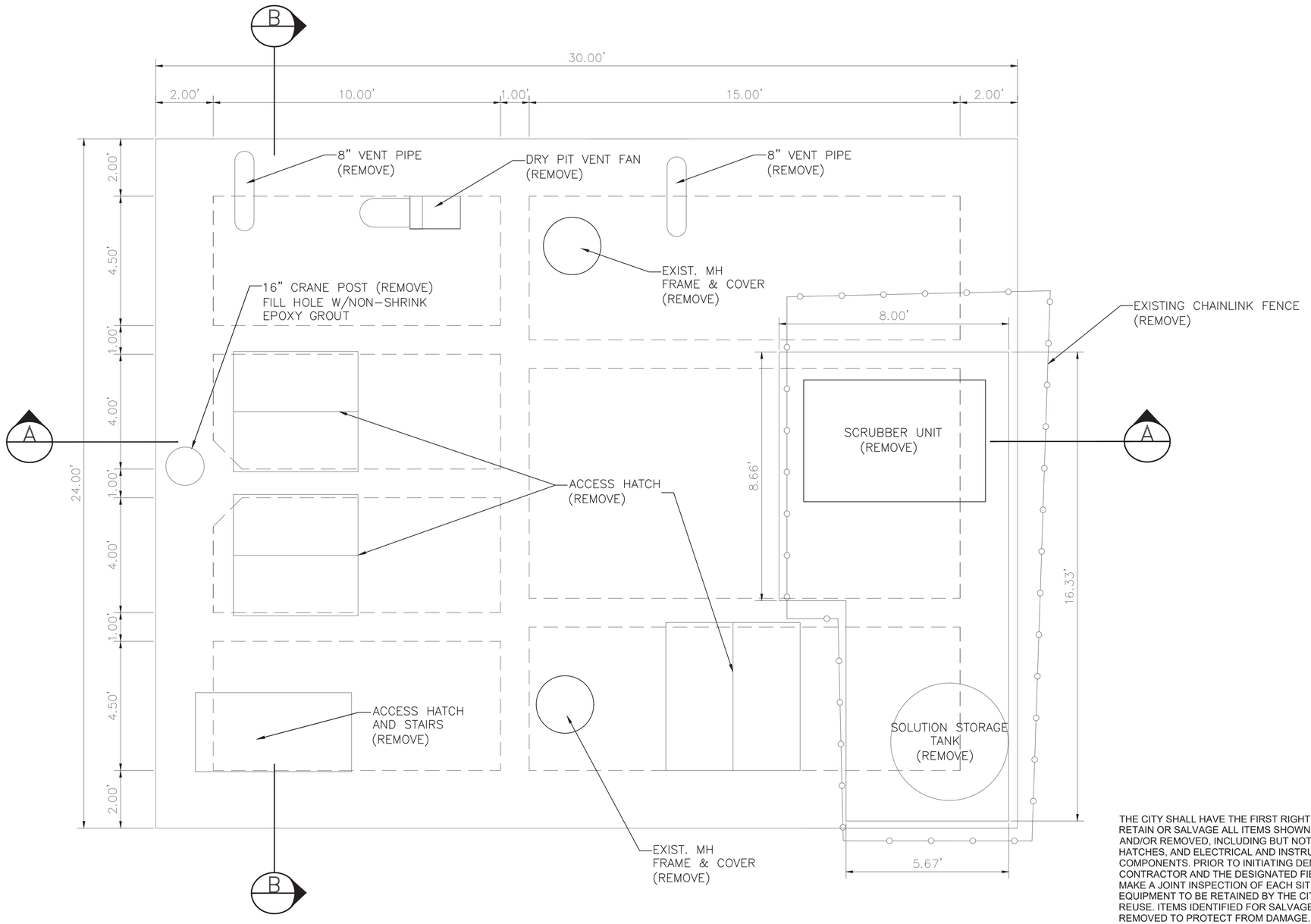

PLAN VIEW

THE CITY SHALL HAVE THE FIRST RIGHT OF REFUSAL TO RETAIN OR SALVAGE ALL ITEMS SHOWN TO BE DEMOLISHED AND/OR REMOVED, INCLUDING BUT NOT LIMITED TO PUMPS, HATCHES, AND ELECTRICAL AND INSTRUMENTATION COMPONENTS. PRIOR TO INITIATING DEMO WORK, THE CONTRACTOR AND THE DESIGNATED FIELD INSPECTOR SHALL MAKE A JOINT INSPECTION OF EACH SITE TO IDENTIFY ALL EQUIPMENT TO BE RETAINED BY THE CITY FOR SALVAGE AND REUSE. ITEMS IDENTIFIED FOR SALVAGE SHALL BE CAREFULLY REMOVED TO PROTECT FROM DAMAGE. ALL OTHER ITEMS SHOWN TO BE DEMOLISHED / REMOVED THAT ARE NOT RETAINED BY THE CITY SHALL BE PROPERLY REMOVED FROM THE SITE AND HANDLED PER SPECIFICATIONS AT N O ADDITIONAL COST TO THE CITY. CONTACT CITY DESIGNATED CITY REPRESENTATIVE FOR WASTEWATER TREATMENT PLANT SALVAGE AT LEAST 72 HOURS PRIOR TO DEMOLITION IN ORDER TO COORDINATE REMOVAL OF ANY ITEMS THE CITY WISHES TO CLAIM AND SALVAGE. THE CONTRACTOR SHALL DELIVER ALL SALVAGE ITEMS TO A LOCATION WITHIN THE CITY DETERMINED BY THE CITY.

DEMOLITION NOTES:

1. THIS DRAWING IS BASED ON AVAILABLE RECORDS AND FIELD OBSERVATIONS. THE CONTRACTOR SHALL SATISFY HIMSELF / HERSELF OF THE ACTUAL CONDITIONS EXISTING AT THE SITE. THIS DRAWING DEPICTS PRIMARY MECHANICAL FEATURES. NOT ALL FEATURES, INCLUDING ELECTRICAL ARE NECESSARILY DEPICTED HEREON. THE CONTRACTOR SHALL BE RESPONSIBLE FOR REMOVING ALL EXISTING EQUIPMENT WITHIN THE EXISTING STRUCTURE AS A PRECURSOR TO CONSTRUCTION OF THE PROPOSED IMPROVEMENTS.
2. DEMOLISH AND REMOVE TOP AND SIDE WALLS OF LIFT STATION TO 2-FEET 6-INCHES BELOW LIFT STATION TOP SLAB ELEVATION. STEEL IN WALLS TO REMAIN (WHERE POSSIBLE) AND BE USED TO DEVELOP REINFORCEMENT FOR NEW TOP SLAB (REFER TO STRUCTURAL DETAILS).
3. THE CONTRACTOR SHALL NOT PROCEED WITH DEMOLITION WORK UNTIL AUTHORIZED. LIFT STATION BYPASS PUMPING MUST BE IN PLACE WITH OPERATIONAL ADEQUACY CHECKED AND CONFIRMED BY THE CITY BEFORE PROCEEDING WITH DEMOLITION WORK.
4. THE CONTRACTOR SHALL BE RESPONSIBLE FOR OBTAINING ANY PERMIT(S) REQUIRED FOR DEMOLITION WORK.
5. ALL ITEMS DAMAGED OR REMOVED BY THE CONTRACTOR AND NOT SPECIFICALLY DESIGNATED FOR DEMOLITION SHALL BE REPAIRED OR REPLACED BY THE CONTRACTOR AT NO COST TO THE CITY.
6. THE CONTRACTOR MAY DISCHARGE LIQUID WASTE AND WASH DOWN TO THE CITY WASTEWATER COLLECTION SYSTEM, HOWEVER; ALL DISCHARGES MUST BE COMPLIANT WITH THE CITY'S INDUSTRIAL WASTE ORDINANCE, CHAPTER 47, ARTICLE V. THE CONTRACTOR IS ADVISED THAT A PERMIT OR TEMPORARY DISCHARGE AUTHORIZATION MAY BE REQUIRED. CONTACT THE INDUSTRIAL WASTEWATER DIVISION AT (832) 395-5800. IN LIEU OF A DISCHARGE AUTHORIZATION, THE CONTRACTOR SHALL COLLECT AND HAUL, AT CONTRACTOR EXPENSE, ALL NON-SOLID DISCHARGES TO AN APPROVED CITY FACILITY.
7. REFER TO STRUCTURAL AND ELECTRICAL DEMOLITION DRAWINGS FOR INFORMATION RELATED TO THOSE SPECIFIC ACTIVITIES.
8. THE CITY OF HOUSTON WILL RETAIN SALVAGE RIGHTS TO ALL MATERIALS AND EQUIPMENT. FOR FURTHER INFORMATION, REFER TO SPECIFICATION SECTION 01110, PARAGRAPH 1.02.I.

AMANI ENGINEERING, INC.
11011 RICHMOND AVENUE
SUITE 700
HOUSTON, TEXAS 77024
TEL: (713) 270-5700
TBPE REG. NO. F-4528
TBPELS REG. NO. 1028200

HATCH
750 TOWN & COUNTRY BLVD.
SUITE 650
HOUSTON, TEXAS 77024
P:832-930-7670
TX FIRM NUMBER: F-314

SURVEYED BY:
AMANI ENGINEERING,INC.
FB NO. P-6357

STATE OF TEXAS
DAVID L. BROWN
48282
REGISTERED
PROFESSIONAL
8/11/2026

CITY OF HOUSTON

HOUSTON PUBLIC WORKS

LIFT STATION RENEWAL & REPLACEMENT PROJECT

N.E. SLUDGE TRANSFER LIFT STATION
EXISTING PLAN VIEW
MECHANICAL DEMOLITION

WBS NUMBER	FOR CITY OF HOUSTON USE ONLY
R-000267-0173-4	HOUSTON PUBLIC WORKS ACCEPTED AND FILED 82825 CITY DRAWING NUMBER Approval Date 08/14/26 HOUSTON TX
DRAWING SCALE	
Scale 1"=2'	
CITY OF HOUSTON PM	
NUPUR KRISHNAN, PE N.K.	
F1M41	SHEET NO. 177 OF 274

FILE NAME:
PLOTTED ON:

0 1 2 3 ORIGINAL SCALE IN INCHES FOR REDUCED PLANS

P:\Cod\2024\24013 - Hatch - COH FY20 Lift Stations\CAD_DWG\LIFT STATIONS MECHANICAL DEMOLITION PLAN\4-NORTHEAST SLUDGE TRANSFER\LS-NORTHEAST SLUDGE TRANSFER-MECH DEMO-PLAN VIEW-11 2025.dwg

THE CITY SHALL HAVE THE FIRST RIGHT OF REFUSAL TO RETAIN OR SALVAGE ALL ITEMS SHOWN TO BE DEMOLISHED AND/OR REMOVED, INCLUDING BUT NOT LIMITED TO PUMPS, HATCHES, AND ELECTRICAL AND INSTRUMENTATION COMPONENTS. PRIOR TO INITIATING DEMO WORK, THE CONTRACTOR AND THE DESIGNATED FIELD INSPECTOR SHALL MAKE A JOINT INSPECTION OF EACH SITE TO IDENTIFY ALL EQUIPMENT TO BE RETAINED BY THE CITY FOR SALVAGE AND REUSE. ITEMS IDENTIFIED FOR SALVAGE SHALL BE CAREFULLY REMOVED TO PROTECT FROM DAMAGE. ALL OTHER ITEMS SHOWN TO BE DEMOLISHED / REMOVED THAT ARE NOT RETAINED BY THE CITY SHALL BE PROPERLY REMOVED FROM THE SITE AND HANDLED PER SPECIFICATIONS AT N O ADDITIONAL COST TO THE CITY. CONTACT CITY DESIGNATED CITY REPRESENTATIVE FOR WASTEWATER TREATMENT PLANT SALVAGE AT LEAST 72 HOURS PRIOR TO DEMOLITION IN ORDER TO COORDINATE REMOVAL OF ANY ITEMS THE CITY WISHES TO CLAIM AND SALVAGE. THE CONTRACTOR SHALL DELIVER ALL SALVAGE ITEMS TO A LOCATION WITHIN THE CITY DETERMINED BY THE CITY.

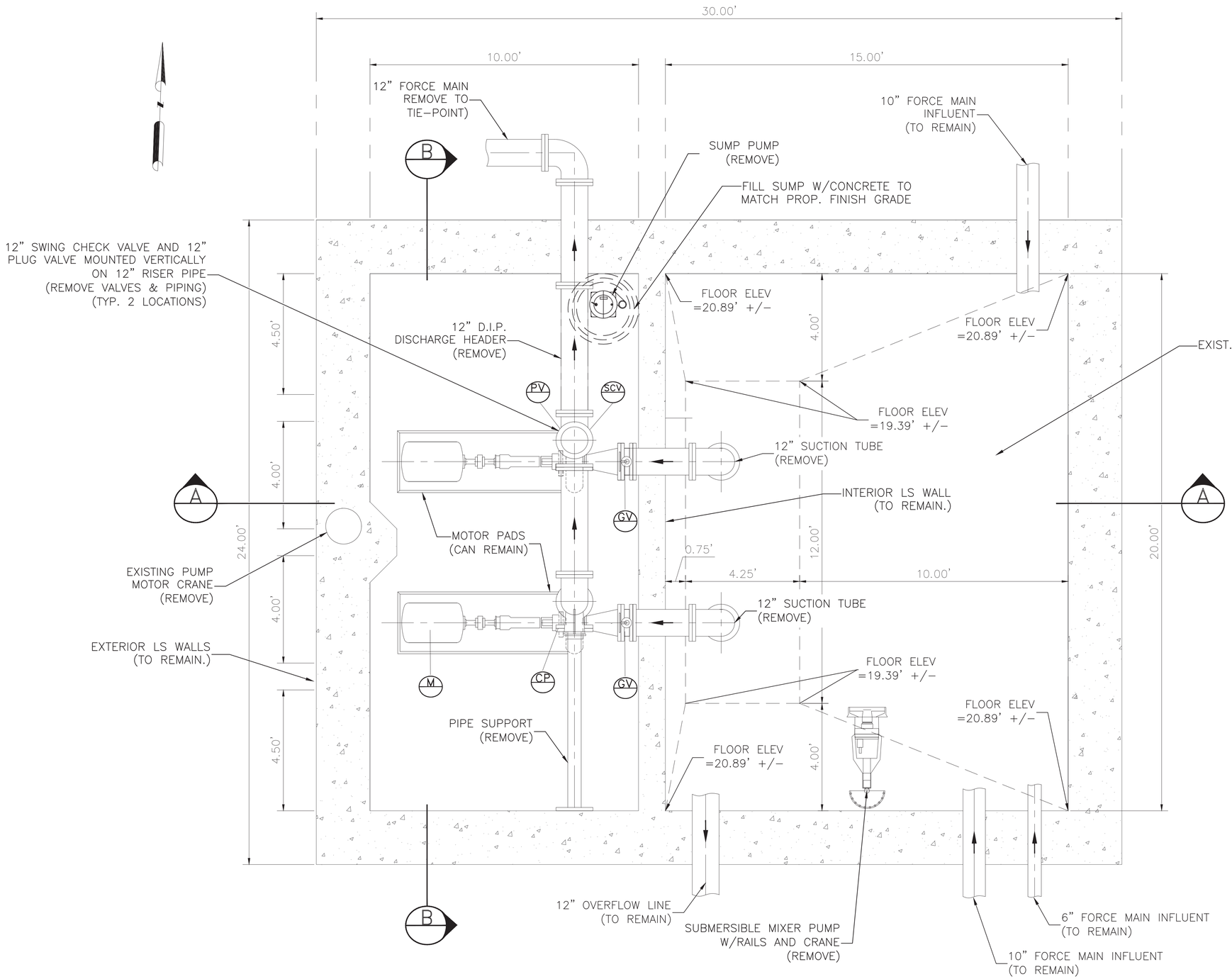

PIPING & EQUIPMENT SECTIONAL PLAN VIEW

LEGEND

- PV — PLUG VALVE (REMOVE)
- SCV — SWING CHECK VALVE (REMOVE)
- GV — KNIFE GATE VALVE (REMOVE)
- CP — CENTRIFUGAL PUMP (REMOVE)
- M — PUMP MOTOR (REMOVE)

AMANI ENGINEERING, INC.
11011 RICHMOND AVENUE
SUITE 700
HOUSTON, TEXAS 77024
TEL: (713) 270-5700
TBPE REG. NO. F-4528
TBPELS REG. NO. 1028200

HATCH
750 TOWN & COUNTRY BLVD.
SUITE 650
HOUSTON, TEXAS 77024
P:832-930-7670
TX FIRM NUMBER: F-314

SURVEYED BY:
AMANI ENGINEERING,INC.
FB NO. P-6357

STATE OF TEXAS
DAVID L. BROWN
48282
REGISTERED
PROFESSIONAL ENGINEER
8/11/2026

CITY OF HOUSTON
HOUSTON PUBLIC WORKS

LIFT STATION RENEWAL & REPLACEMENT PROJECT

N.E. SLUDGE TRANSFER LIFT STATION
EXISTING FLOOR PLAN VIEW
MECHANICAL DEMOLITION

WBS NUMBER	R-000267-0173-4
DRAWING SCALE	Scale 1"=2'
CITY OF HOUSTON PM	NUPUR KRISHNAN, PE N.K.

FOR CITY OF HOUSTON USE ONLY

HOUSTON PUBLIC WORKS
ACCEPTED AND FILED
82825
CITY DRAWING NUMBER
Approval Date 08/14/26
HOUSTON TX

F1M42

SHEET NO. 178 OF 274

FILE NAME:
PLOTTED ON:

0 1 2 3 ORIGINAL SCALE IN INCHES FOR REDUCED PLANS

P:\Cad\2024\24013 - Hatch - COH FY26 Lift Stations\CAD_DWG\LIFT STATIONS MECHANICAL DEMOLITION PLAN\4-NORTHEAST SLUDGE TRANSFER\LS-NORTHEAST SLUDGE TRANSFER 11_2025.dwg

THE CITY SHALL HAVE THE FIRST RIGHT OF REFUSAL TO RETAIN OR SALVAGE ALL ITEMS SHOWN TO BE DEMOLISHED AND/OR REMOVED, INCLUDING BUT NOT LIMITED TO PUMPS, HATCHES, AND ELECTRICAL AND INSTRUMENTATION COMPONENTS. PRIOR TO INITIATING DEMO WORK, THE CONTRACTOR AND THE DESIGNATED FIELD INSPECTOR SHALL MAKE A JOINT INSPECTION OF EACH SITE TO IDENTIFY ALL EQUIPMENT TO BE RETAINED BY THE CITY FOR SALVAGE AND REUSE. ITEMS IDENTIFIED FOR SALVAGE SHALL BE CAREFULLY REMOVED TO PROTECT FROM DAMAGE. ALL OTHER ITEMS SHOWN TO BE DEMOLISHED / REMOVED THAT ARE NOT RETAINED BY THE CITY SHALL BE PROPERLY REMOVED FROM THE SITE AND HANDLED PER SPECIFICATIONS AT N O ADDITIONAL COST TO THE CITY. CONTACT CITY DESIGNATED CITY REPRESENTATIVE FOR WASTEWATER TREATMENT PLANT SALVAGE AT LEAST 72 HOURS PRIOR TO DEMOLITION IN ORDER TO COORDINATE REMOVAL OF ANY ITEMS THE CITY WISHES TO CLAIM AND SALVAGE. THE CONTRACTOR SHALL DELIVER ALL SALVAGE ITEMS TO A LOCATION WITHIN THE CITY DETERMINED BY THE CITY.

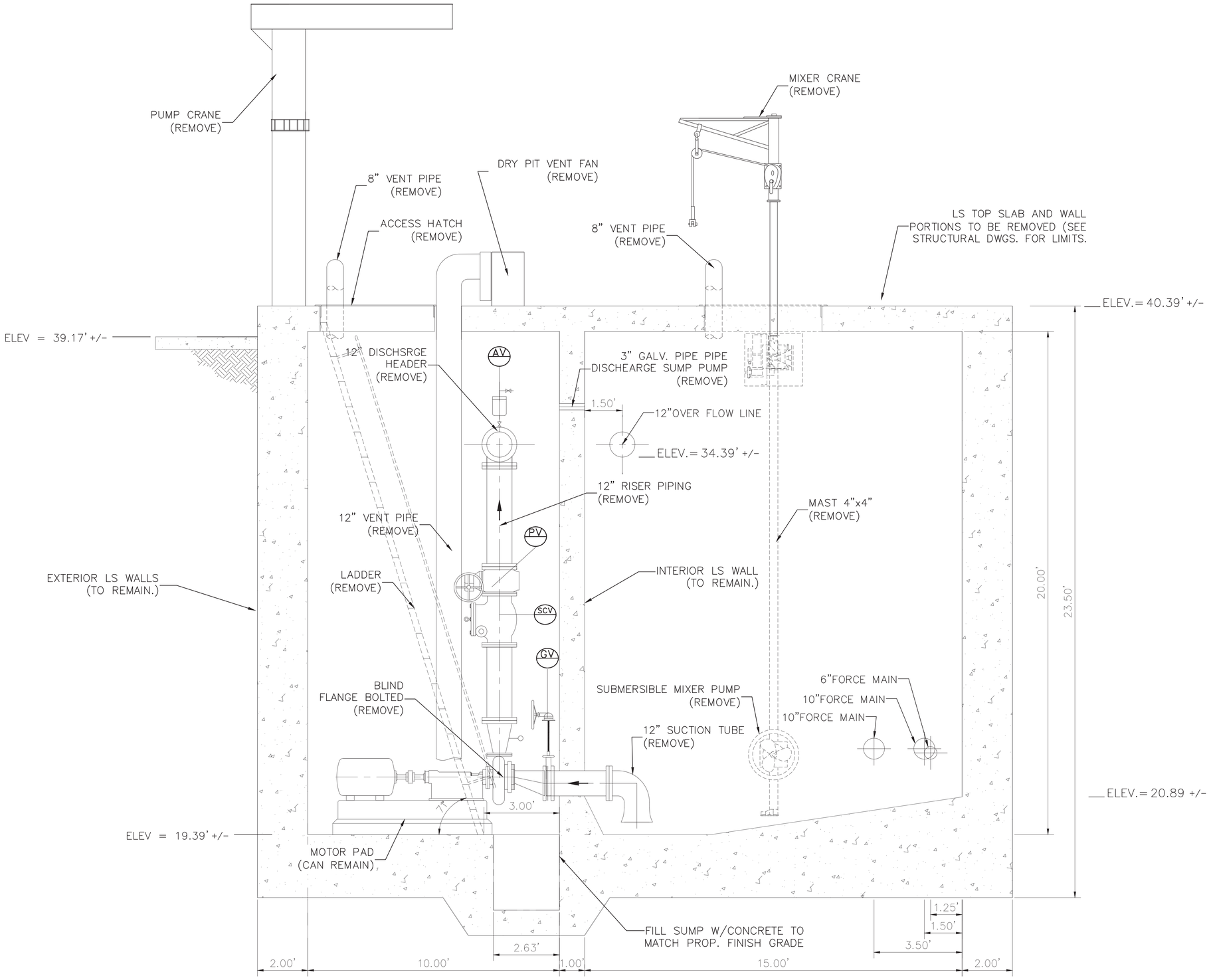

SECTION A–A

LEGEND

- PV — PLUG VALVE (REMOVE)
- SCV — SWING CHECK VALVE (REMOVE)
- GV — KNIFE GATE VALVE (REMOVE)
- CP — CENTRIFUGAL PUMP (REMOVE)
- M — PUMP MOTOR (REMOVE)

AMANI ENGINEERING, INC.
11011 RICHMOND AVENUE
SUITE 700
HOUSTON, TEXAS 77024
TEL: (713) 270-5700
TBPE REG. NO. F-4528
TBPELS REG. NO. 1028200

HATCH
750 TOWN & COUNTRY BLVD.
SUITE 650
HOUSTON, TEXAS 77024
P:832-930-7670
TX FIRM NUMBER: F-314

SURVEYED BY:
AMANI ENGINEERING,INC.
FB NO. P-6357

STATE OF TEXAS — DAVID L. BROWN — 48282 — REGISTERED PROFESSIONAL LAND SURVEYOR
8/11/2026

CITY OF HOUSTON
HOUSTON PUBLIC WORKS

LIFT STATION RENEWAL & REPLACEMENT PROJECT

N.E. SLUDGE TRANSFER LIFT STATION
EXISTING ELEVATION SECTION VIEW
MECHANICAL DEMOLITION

WBS NUMBER	R-000267-0173-4
DRAWING SCALE	Scale 1"=2'
CITY OF HOUSTON PM	NUPUR KRISHNAN, PE N.K.
F1M43	SHEET NO. 179 OF 274

FOR CITY OF HOUSTON USE ONLY

HOUSTON PUBLIC WORKS
ACCEPTED AND FILED
82825
CITY DRAWING NUMBER
Approval Date 08/14/26
HOUSTON TX

FILE NAME:
PLOTTED ON:

ORIGINAL SCALE IN INCHES FOR REDUCED PLANS
0 1 2 3

P:\Cmd\2024\24013 - Hatch - COH FY26 Lift Stations\CAD_DWG\LIFT STATIONS MECHANICAL DEMOLITION PLAN\4-NORTHEAST SLUDGE TRANSFER\LS-NORTHEAST SLUDGE 11 2025.dwg

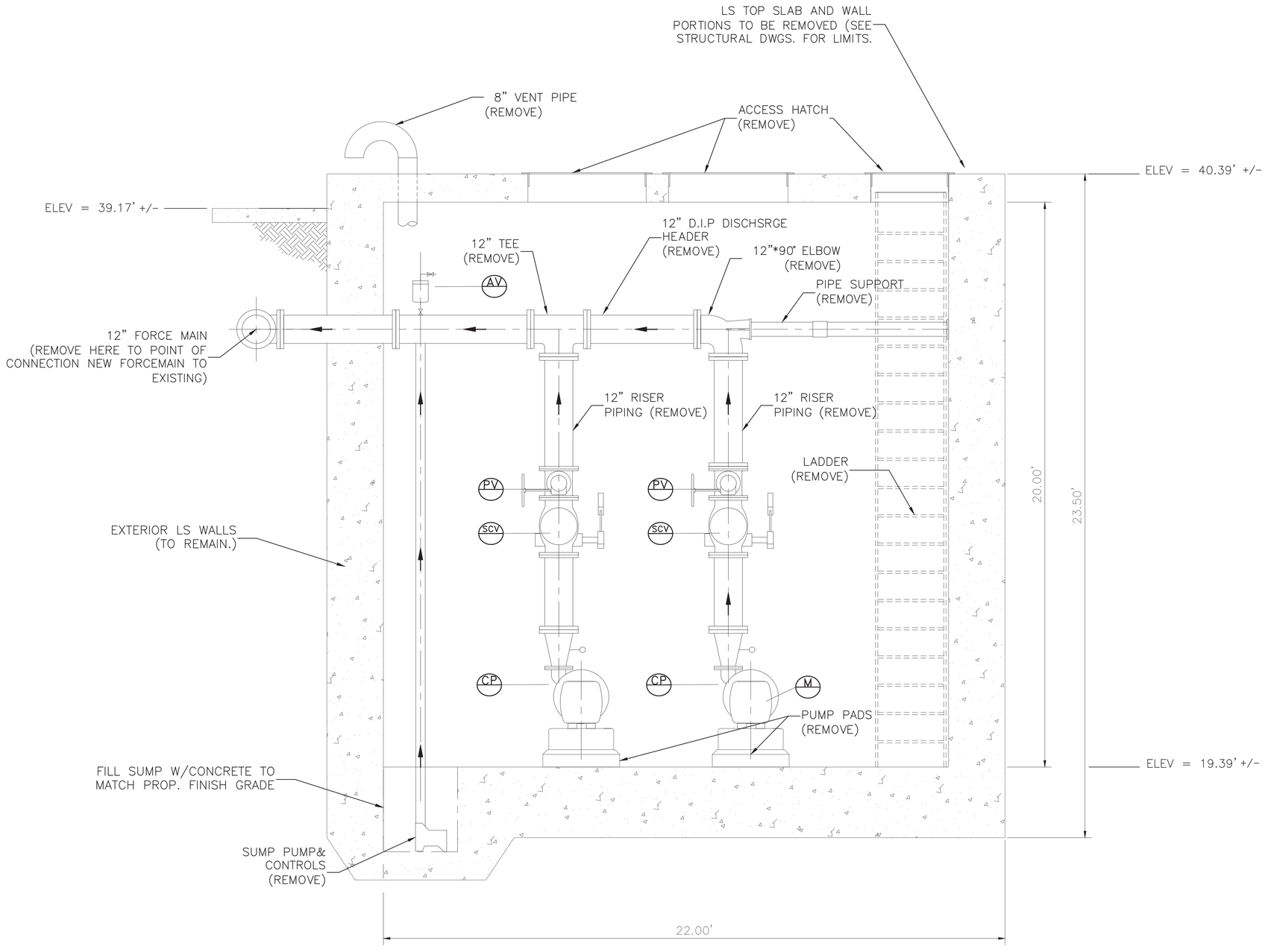

SECTION B–B

THE CITY SHALL HAVE THE FIRST RIGHT OF REFUSAL TO RETAIN OR SALVAGE ALL ITEMS SHOWN TO BE DEMOLISHED AND/OR REMOVED, INCLUDING BUT NOT LIMITED TO PUMPS, HATCHES, AND ELECTRICAL AND INSTRUMENTATION COMPONENTS. PRIOR TO INITIATING DEMO WORK, THE CONTRACTOR AND THE DESIGNATED FIELD INSPECTOR SHALL MAKE A JOINT INSPECTION OF EACH SITE TO IDENTIFY ALL EQUIPMENT TO BE RETAINED BY THE CITY FOR SALVAGE AND REUSE. ITEMS IDENTIFIED FOR SALVAGE SHALL BE CAREFULLY REMOVED TO PROTECT FROM DAMAGE. ALL OTHER ITEMS SHOWN TO BE DEMOLISHED / REMOVED THAT ARE NOT RETAINED BY THE CITY SHALL BE PROPERLY REMOVED FROM THE SITE AND HANDLED PER SPECIFICATIONS AT N O ADDITIONAL COST TO THE CITY. CONTACT CITY DESIGNATED CITY REPRESENTATIVE FOR WASTEWATER TREATMENT PLANT SALVAGE AT LEAST 72 HOURS PRIOR TO DEMOLITION IN ORDER TO COORDINATE REMOVAL OF ANY ITEMS THE CITY WISHES TO CLAIM AND SALVAGE. THE CONTRACTOR SHALL DELIVER ALL SALVAGE ITEMS TO A LOCATION WITHIN THE CITY DETERMINED BY THE CITY.

LEGEND

- PV — PLUG VALVE (REMOVE)
- SCV — SWING CHECK VALVE (REMOVE)
- GV — KNIFE GATE VALVE (REMOVE)
- CP — CENTRIFUGAL PUMP (REMOVE)
- M — PUMP MOTOR (REMOVE)

AMANI ENGINEERING, INC.
11011 RICHMOND AVENUE
SUITE 700
HOUSTON, TEXAS 77024
TEL: (713) 270-5700
TBPE REG. NO. F-4528
TBPELS REG. NO. 1028200

HATCH
750 TOWN & COUNTRY BLVD.
SUITE 650
HOUSTON, TEXAS 77024
P:832-930-7670
TX FIRM NUMBER: F-314

SURVEYED BY:
AMANI ENGINEERING,INC.
FB NO. P-6357

STATE OF TEXAS — DAVID L BROWN — 48282 — REGISTERED PROFESSIONAL — 8/11/2026

CITY OF HOUSTON
HOUSTON PUBLIC WORKS

LIFT STATION RENEWAL & REPLACEMENT PROJECT

N.E. SLUDGE TRANSFER LIFT STATION
EXISTING ELEVATION SECTION VIEW
MECHANICAL DEMOLITION

WBS NUMBER	FOR CITY OF HOUSTON USE ONLY
R-000267-0173-4	HOUSTON PUBLIC WORKS ACCEPTED AND FILED 82825 CITY DRAWING NUMBER Approval Date 08/14/26 HOUSTON TX
DRAWING SCALE	
Scale 1"=2'	
CITY OF HOUSTON PM	
NUPUR KRISHNAN, PE N.K.	
SHEET NO. 180 OF 274	

F1M43

0 1 2 3 ORIGINAL SCALE IN INCHES FOR REDUCED PLANS

FILE NAME:
PLOTTED ON:

P:\Cadd\2024\24013 - Hatch - COH FY20 Lift Stations\CAD_DWG\LIFT STATIONS MECHANICAL DEMOLITION PLAN\4-NORTHEAST SLUDGE TRANSFER\LS-NORTHEAST SLUDGE 11 2025.dwg

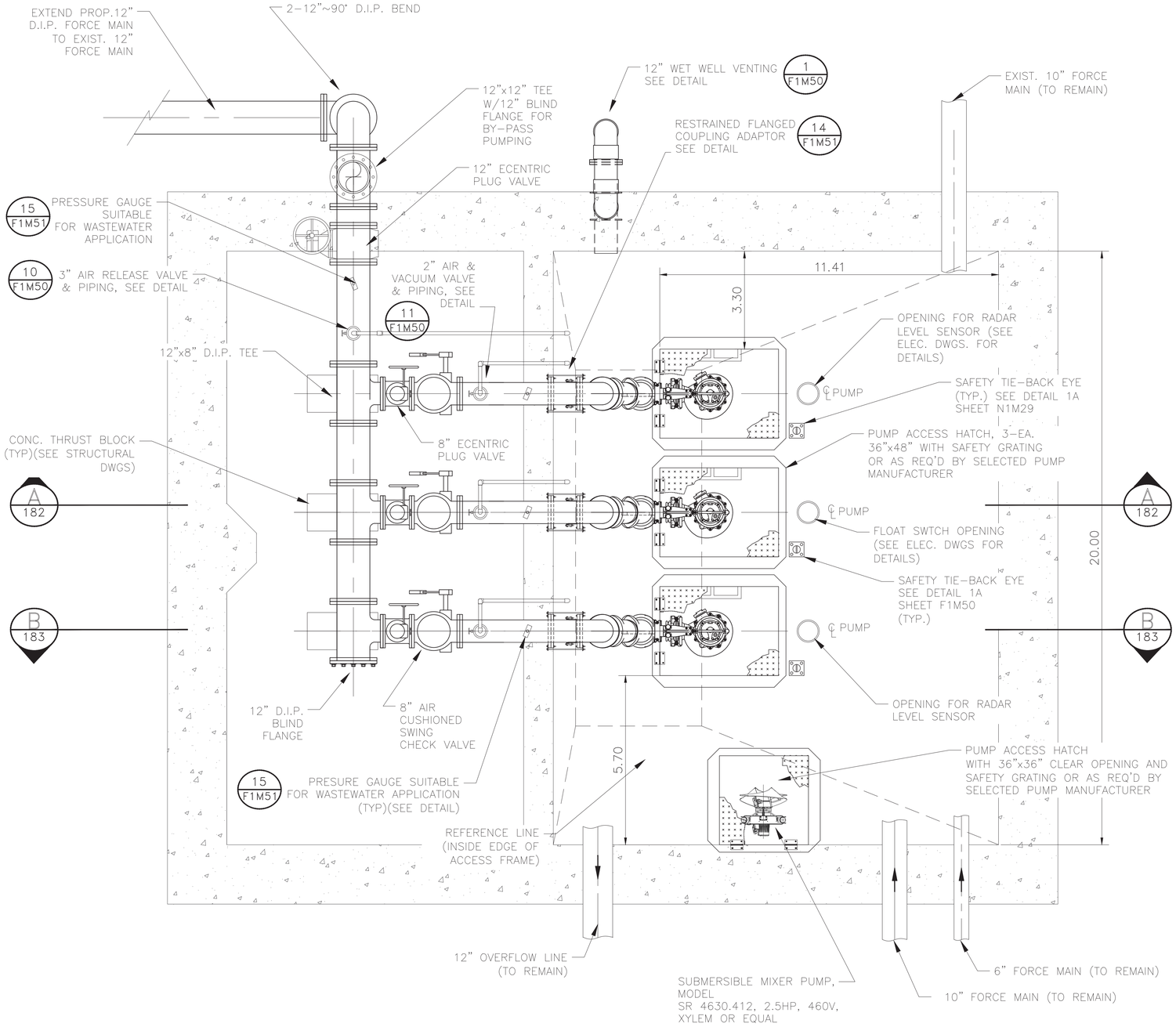

PIPING & EQUIPMENT PLAN VIEW

0 1 2 3 ORIGINAL SCALE IN INCHES FOR REDUCED PLANS

NOTES:

1. CONTRACTOR TO VERIFY DIMENSIONS REQUIRED TO INSTALL AND OPERATE VALVES.
2. SEE DETAIL AND STRUCTURAL DRAWINGS FOR DIMENSIONS AND INFORMATION NOT SHOWN.
3. CONTRACTOR TO CONFIRM SIZE AND LOCATION OF THE WET WELL HATCHES PER HATCH AND PUMP MANUFACTURER'S REQUIREMENTS.
4. PUMP AND ANCHOR BOLTS ARE TO BE ADHESIVE TYPE, AND EMBEDDED IN THE CONCRETE SLAB. CONTRACTOR TO SUBMIT DESIGN OF PUMP ANCHOR BOLTS AND PATTERN, INCLUDING CALCULATIONS, DURING SHOP DRAWING SUBMISSION.
5. CONTRACTOR TO PROVIDE ADHESIVE ANCHORS IN LIEU OF WEDGE ANCHORS FOR ALL SUBMERGED CONDITIONS AND SUBMIT DESIGN OF ANCHOR BOLTS DURING SHOP DRAWING SUBMISSION.
6. ALL PIPING IN THE WET WELL SHALL BE FLANGED. NO FLANGED COUPLING ADAPTORS, OR VICTAULIC STYLE COUPLINGS SHALL BE PERMITTED INSIDE OF THE WET WELL.
7. INSTALL PLUG VALVES TO OPEN UPWARD AND TO CLOSE TO A SEATING POSITION.
8. INSTALL CHECK VALVES SO THAT THE WEIGHT LEVER POSITION IS APPROXIMATELY 45° BELOW THE VALVE HORIZONTAL CENTER LINE IN THE CLOSE POSITION: AND APPROXIMATELY 45° ABOVE THE HORIZONTAL CENTER LINE IN THE FULL OPEN POSITION.
9. THE ACCESS HATCHES MUST BE WATERTIGHT AND PAINTED FOREST GREEN. THE SAFETY GRATING MUST BE PROVIDED WITH A SAFETY ORANGE POWDER COAT FINISH. COATING REQUIREMENTS SHALL BE IN COMPLIANCE WITH SPECIFICATION REQUIREMENTS.
10. LABEL HATCHES WITH THE CORRESPONDING PUMP NUMBER AND CHECK VALVES WITH THE CORRESPONDING VALVE NUMBER USING A 12-INCH BY 12-INCH PLATE ENGRAVED WITH 6-INCH LETTERING WELDED TO THE HATCHES AND ADHERED TO THE VALVES.
11. COATINGS ARE REQUIRED BY THE CITY OF HOUSTON ON ALL VENT PIPES. COATINGS SHALL COMPLY WITH SPECIFICATIONS 02083, PARAGRAPH 2.11.C.4. AND 09901, PARAGRAPH 2.02.G.
12. PRESSURE GAUGES SHALL BE SUITABLE FOR WASTEWATER APPLICATIONS.
13. APPLY PROTECTIVE COATINGS TO PIPES, VALVES AND FITTINGS AS APPLICABLE. LABEL PIPING WITH DIRECTIONAL FLOW ARROWS IN COMPLIANCE WITH SPECIFICATION REQUIREMENTS
14. AIR RELEASE AND AIR VACUUM VALVES TO BE PROVIDED WITH STAINLESS STEEL BODIES IN COMPLIANCE WITH SPECIFICATION REQUIREMENTS.

NO.	DATE	REVISION	APP.

AMANI ENGINEERING, INC.
11011 RICHMOND AVENUE
SUITE 700
HOUSTON, TEXAS 77024
TEL: (713) 270-5700
TBPE REG. NO. F-4528
TBPELS REG. NO. 1028200

HATCH
750 TOWN & COUNTRY BLVD.
SUITE 650
HOUSTON, TEXAS 77024
P:832-930-7670
TX FIRM NUMBER: F-314

SURVEYED BY:
AMANI ENGINEERING,INC.
FB NO. P-6357

STATE OF TEXAS · DAVID L. BROWN · 48282 · REGISTERED PROFESSIONAL ENGINEER
8/11/2026

CITY OF HOUSTON
HOUSTON PUBLIC WORKS

LIFT STATION RENEWAL & REPLACEMENT PROJECT

N.E. SLUDGE TRANSFER LIFT STATION
PROPOSED MECHANICAL PLAN VIEW

WBS NUMBER	FOR CITY OF HOUSTON USE ONLY
R-000267-0173-4	HOUSTON PUBLIC WORKS ACCEPTED AND FILED 82825 CITY DRAWING NUMBER Approval Date 08/14/26 HOUSTON TX
DRAWING SCALE	
Scale 1"=2'	
CITY OF HOUSTON PM	
N.K. NUPUR KRISHNAN, PE	
F1M45	SHEET NO. 181 OF 274

FILE NAME:
PLOTTED ON:

P:\Civil\2024\24013 - Hatch - COH FY20 Lift Stations\CAD_DWG\Phase II\S- Phase II NORTHEAST SLUDGE TRANSFER\Phase II_S- NORTHEAST SLUDGE TRANSFER.dwg

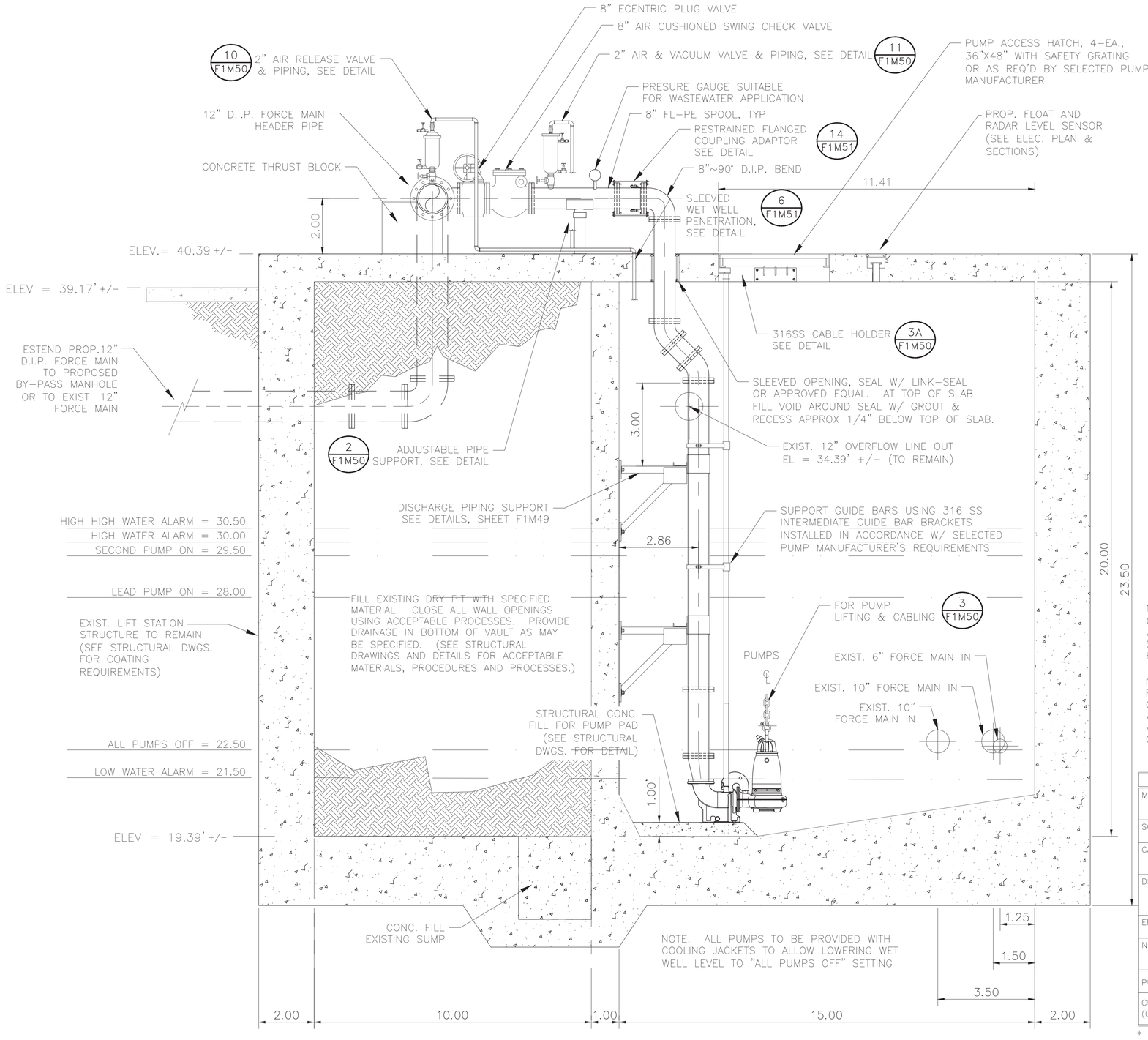

SECTION A-A

ORIGINAL SCALE IN INCHES
FOR REDUCED PLANS
0 1 2 3

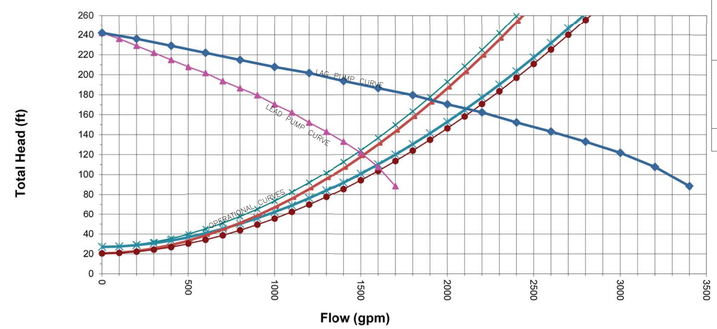

STATION OPERATION TABLES

RISING LEVEL CYCLE			
WATER LEVEL DEPTH	WATER LEVEL ELEVATION	ACTION	PUMP(S) IN OPERATION
3.61	23.00	PUMPS OFF LEVEL – NO ACTION	ALL PUMPS ARE OFF
8.61	28.00	LEAD PUMP TURNS ON	LEAD PUMP ON
10.11	29.50	LEAD & SECOND PUMP TURN ON	LEAD AND SECOND PUMPS ON
10.61	30.00	HIGH WATER ALARM ON	HIGH WATER ALARM SOUND
11.11	30.50	HIGH HIGH WATER ALARM (FLOAT ON LEVEL)	FIRM PUMPS ON (FLOATS ON LEVEL)

FALLING LEVEL CYCLE			
WATER LEVEL DEPTH	WATER LEVEL ELEVATION	ACTION	PUMP(S) IN OPERATION
11.11	30.50	(FLOAT OFF LEVEL)	FIRM PUMPS OFF (FLOAT OFF LEVEL)
10.61	30.00	HIGH WATER LEVEL ALARM OFF	LEAD AND SECOND PUMPS ON
10.11	29.50	LEAD PUMP TURNS OFF	SECOND PUMP ON
3.61	23.00	SECOND PUMP TURNS OFF	ALL PUMPS STOPPED – STANDBY PUMP SWITCHES TO LEAD PUMP
2.61	22.00	LOW LEVEL ALARM	–

NOTE: PUMPS SIZED FOR FUTURE EXTENSION OF EXISTING FORCEMAIN (APPROX. 1,500-FT.) AND POTENTIAL FOR ADDITIONAL 10-FEET OF STATIC HEAD BASED ON RECONFIGURATION OF HEADWORKS AT 69TH ST. SLUDGE FACILITY

NOTE: FLOW TO N.E. SLUDGE STATION COMES FROM THREE OTHER SLUDGE STATIONS. TIMING OF THAT FLOW IS NOT KNOWN. THE INDIVIDUAL AVERAGE FLOWS FROM THOSE THREE STATIONS IS 474GPM, 349GPM AND 428GPM FOR A TOTAL CONTRIBUTING FLOW OF 1,251 GPM

PUMP DATA TABLE

PUMP CHARACTERISTICS	PUMP NO. 1	PUMP NO. 2	PUMP NO. 3
MOTOR DATA NOMINAL SIZE (HP) MAX SPEED (RPM)	 70 1775	 70 1775	 70 1775
SOLIDS PASSAGE MIN SPHERE (IN)	 3	 3	 3
CAPACITY (GPM) DESIGN RUNOUT	 1480 1750	 1480 1750	 1480 1750
DISCHARGE HEAD (FT) DESIGN RUNOUT SHUT OFF	 125 75 242	 125 75 242	 125 75 242
EFFICIENCY (%) DESIGN	 70	 70	 70
NPSHR (FT) DESIGN RUNOUT	 13.5 38.0	 13.5 38.0	 13.5 38.0
PUMP CYCLE TIME	10+	10+	10+
CUMULATIVE CAPACITY* (GPM)	1480	1920	STANDBY

* CUMMULATIVE CAPACITY IS THE DUTY POINT WHEN ALL PUMPS IN THE OPERATIONAL CYCLE ARE BEING CALLED.

AMANI ENGINEERING, INC.
11011 RICHMOND AVENUE
SUITE 700
HOUSTON, TEXAS 77024
TEL: (713) 270-5700
TBPE REG. NO. F-4528
TBPELS REG. NO. 1028200

HATCH
750 TOWN & COUNTRY BLVD.
SUITE 650
HOUSTON, TEXAS 77024
P:832-930-7670
TX FIRM NUMBER: F-314

SURVEYED BY:
AMANI ENGINEERING,INC.
FB NO. P-6357

STATE OF TEXAS
DAVID L. BROWN
48282
REGISTERED
PROFESSIONAL
SURVEYOR
8/11/2026

CITY OF HOUSTON
HOUSTON PUBLIC WORKS

LIFT STATION RENEWAL & REPLACEMENT PROJECT

N.E. SLUDGE TRANSFER LIFT STATION
PROPOSED MECHANICAL ELEVATION SECTION

WBS NUMBER	R-000267-0173-4
DRAWING SCALE	Scale 1"=2'
CITY OF HOUSTON PM	N.K. NUPUR KRISHNAN, PE
F1M46	SHEET NO. 182 OF 274

FOR CITY OF HOUSTON USE ONLY

HOUSTON PUBLIC WORKS
ACCEPTED AND FILED
82825
CITY DRAWING NUMBER
Approval Date 08/14/26
HOUSTON TX

FILE NAME:
PLOTTED ON:

APP.
REVISION
NO. DATE

P:\Cordy\2024\24013 - Hatch - COH FY20 Lift Stations\CAD_DWG\Phase II\LS- Phase II NORTHEAST SLUDGE TRANSFER\Phase II LS- NORTHEAST SLUDGE TRANSFER.dwg

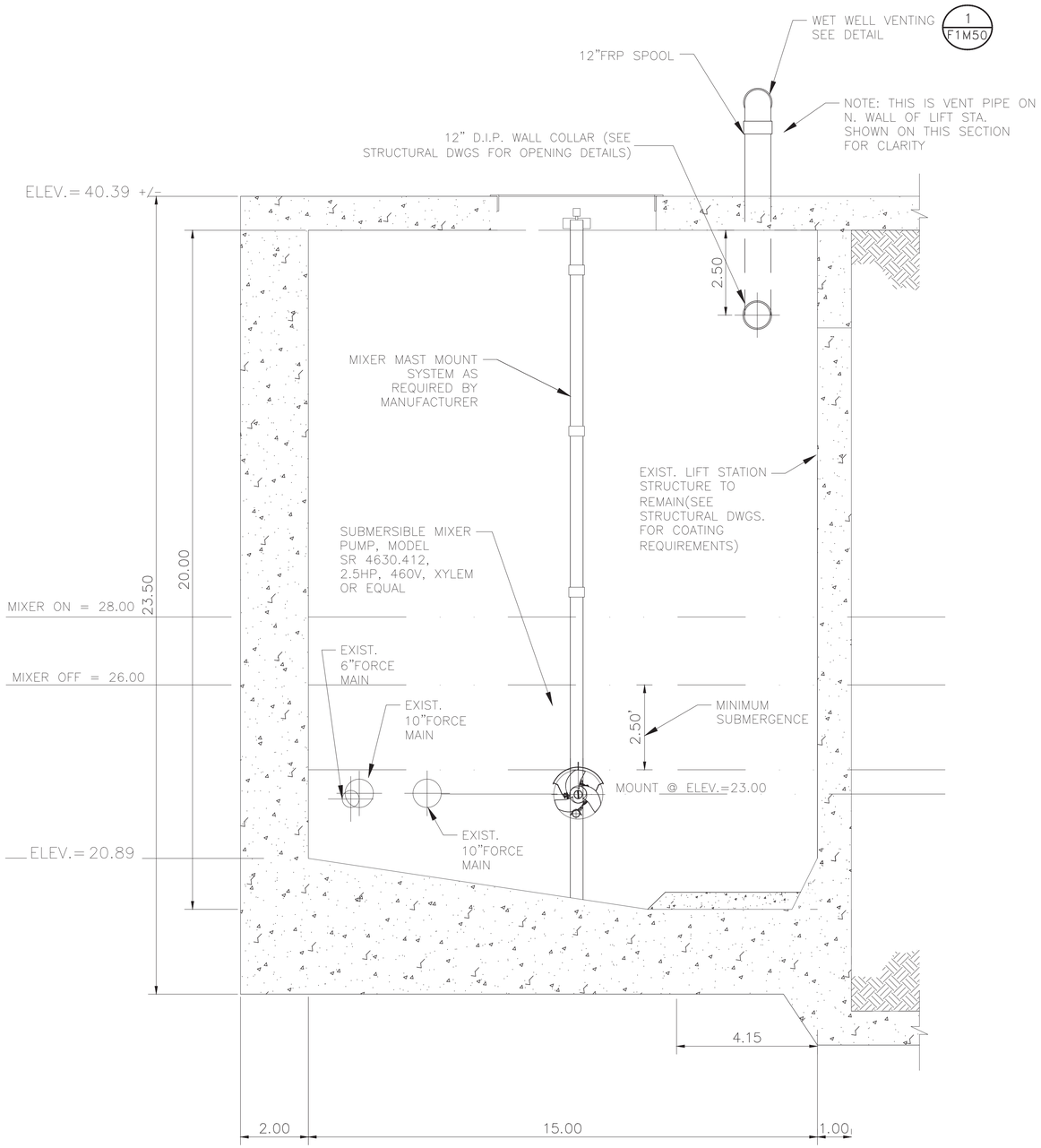

SECTION B–B

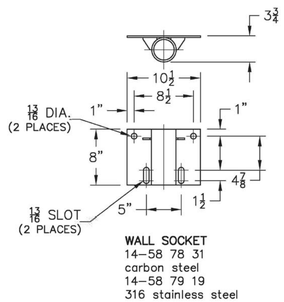

MIXER SUPPORT BRACKET

NOTES:

1. CONTRACTOR TO VERIFY DIMENSIONS REQUIRED TO INSTALL AND OPERATE VALVES.
2. SEE DETAIL AND STRUCTURAL DRAWINGS FOR DIMENSIONS AND INFORMATION NOT SHOWN.
3. CONTRACTOR TO CONFIRM SIZE AND LOCATION OF THE WET WELL HATCHES PER HATCH AND PUMP MANUFACTURER'S REQUIREMENTS.
4. PUMP AND ANCHOR BOLTS ARE TO BE ADHESIVE TYPE, AND EMBEDDED IN THE CONCRETE SLAB. CONTRACTOR TO SUBMIT DESIGN OF PUMP ANCHOR BOLTS AND PATTERN, INCLUDING CALCULATIONS, DURING SHOP DRAWING SUBMISSION.
5. CONTRACTOR TO PROVIDE ADHESIVE ANCHORS IN LIEU OF WEDGE ANCHORS FOR ALL SUBMERGED CONDITIONS AND SUBMIT DESIGN OF ANCHOR BOLTS DURING SHOP DRAWING SUBMISSION.
6. ALL PIPING IN THE WET WELL SHALL BE FLANGED. NO FLANGED COUPLING ADAPTORS, OR VICTAULIC STYLE COUPLINGS SHALL BE PERMITTED INSIDE OF THE WET WELL.
7. INSTALL PLUG VALVES TO OPEN UPWARD AND TO CLOSE TO A SEATING POSITION.
8. INSTALL CHECK VALVES SO THAT THE WEIGHT LEVER POSITION IS APPROXIMATELY 45° BELOW THE VALVE HORIZONTAL CENTER LINE IN THE CLOSE POSITION: AND APPROXIMATELY 45° ABOVE THE HORIZONTAL CENTER LINE IN THE FULL OPEN POSITION.
9. THE ACCESS HATCHES MUST BE WATERTIGHT AND PAINTED FOREST GREEN. THE SAFETY GRATING MUST BE PROVIDED WITH A SAFETY ORANGE POWDER COAT FINISH. COATING REQUIREMENTS SHALL BE IN COMPLIANCE WITH SPECIFICATION REQUIREMENTS.
10. LABEL HATCHES WITH THE CORRESPONDING PUMP NUMBER AND CHECK VALVES WITH THE CORRESPONDING VALVE NUMBER USING A 12–INCH BY 12–INCH PLATE ENGRAVED WITH 6–INCH LETTERING WELDED TO THE HATCHES AND ADHERED TO THE VALVES.
11. UV PROTECTIVE COATINGS ARE REQUIRED BY THE CITY OF HOUSTON ON ALL VENT PIPES.
12. PRESSURE GAUGES SHALL BE SUITABLE FOR WASTEWATER APPLICATIONS.
13. APPLY PROTECTIVE COATINGS TO PIPES, VALVES AND FITTINGS AS APPLICABLE. LABEL PIPING WITH DIRECTIONAL FLOW ARROWS IN COMPLIANCE WITH SPECIFICATION REQUIREMENTS
14. AIR RELEASE AND AIR VACUUM VALVES TO BE PROVIDED WITH STAINLESS STEEL BODIES IN COMPLIANCE WITH SPECIFICATION REQUIREMENTS.

NO.	DATE	REVISION	APP.

AMANI ENGINEERING, INC.
11011 RICHMOND AVENUE
SUITE 700
HOUSTON, TEXAS 77024
TEL: (713) 270–5700
TBPE REG. NO. F–4528
TBPELS REG. NO. 1028200

HATCH
750 TOWN & COUNTRY BLVD.
SUITE 650
HOUSTON, TEXAS 77024
P:832–930–7670
TX FIRM NUMBER: F–314

SURVEYED BY:
AMANI ENGINEERING,INC.
FB NO. P–6357

STATE OF TEXAS
DAVID L. BROWN
48282
REGISTERED
PROFESSIONAL
ENGINEER
8/11/2026

CITY OF HOUSTON
HOUSTON PUBLIC WORKS

LIFT STATION RENEWAL & REPLACEMENT PROJECT

N.E. SLUDGE TRANSFER LIFT STATION
PROPOSED MECHANICAL ELEVATION SECTION

WBS NUMBER	R–000267–0173–4
DRAWING SCALE	Scale 1"=2'
CITY OF HOUSTON PM	N.K. NUPUR KRISHNAN, PE
SHEET NO. 183 OF 274	

FOR CITY OF HOUSTON USE ONLY

HOUSTON PUBLIC WORKS
ACCEPTED AND FILED
82825
CITY DRAWING NUMBER
Approval Date 08/14/26
HOUSTON TX

F1M47

FILE NAME:
PLOTTED ON:

0 1 2 3 ORIGINAL SCALE IN INCHES FOR REDUCED PLANS

P:\Cad\V2024\24013 – Hatch – COH FY20 Lift Stations\CAD_DWG\Phase II\LS– Phase II NORTHEAST SLUDGE TRANSFER\Phase II LS– NORTHEAST SLUDGE TRANSFER.dwg

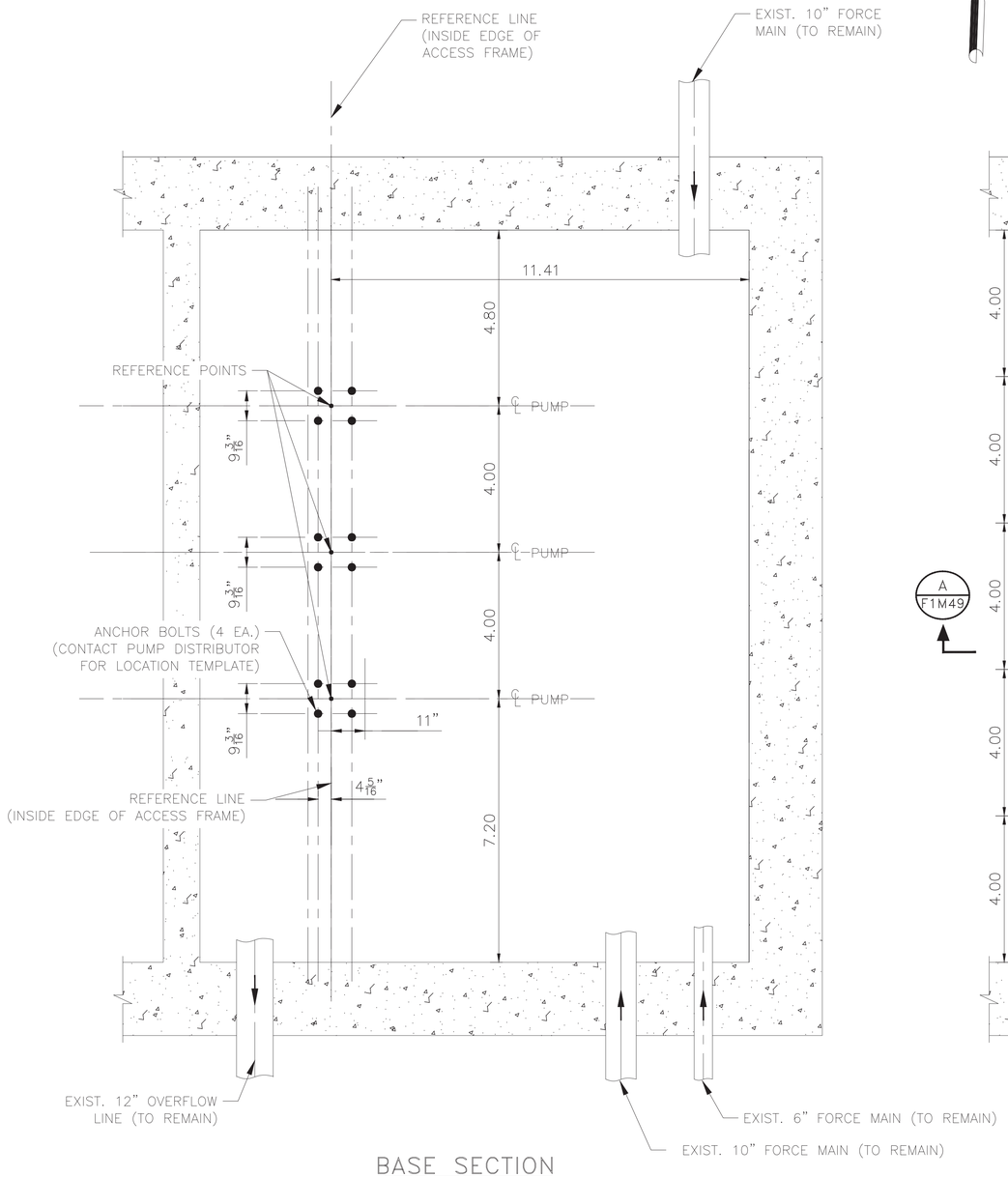

BASE SECTION

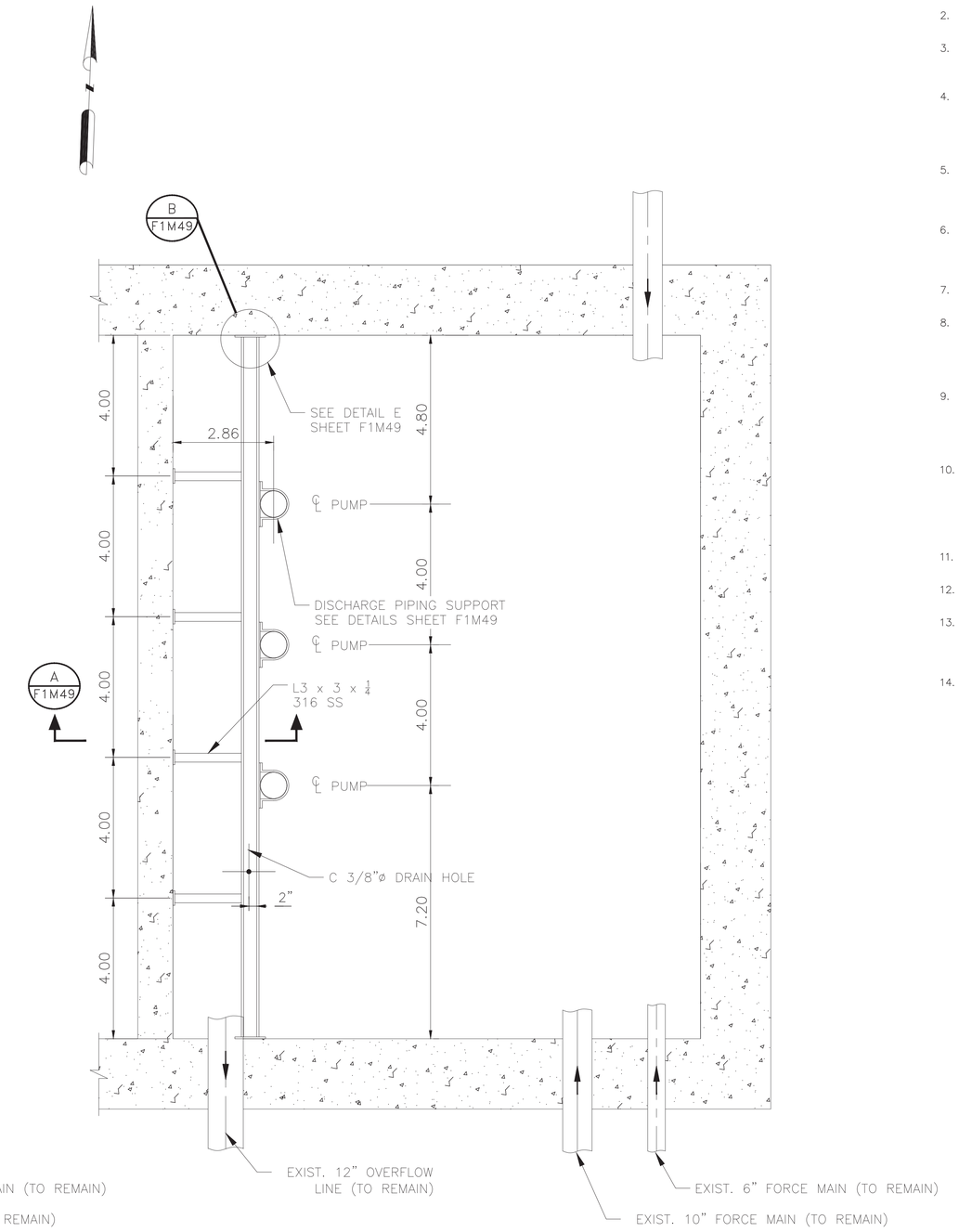

DISCHARGE PIPING SUPPORT PLAN

NOTES:

1. CONTRACTOR TO VERIFY DIMENSIONS REQUIRED TO INSTALL AND OPERATE VALVES.
2. SEE DETAIL AND STRUCTURAL DRAWINGS FOR DIMENSIONS AND INFORMATION NOT SHOWN.
3. CONTRACTOR TO CONFIRM SIZE AND LOCATION OF THE WET WELL HATCHES PER HATCH AND PUMP MANUFACTURER'S REQUIREMENTS.
4. PUMP AND ANCHOR BOLTS ARE TO BE ADHESIVE TYPE, AND EMBEDDED IN THE CONCRETE SLAB. CONTRACTOR TO SUBMIT DESIGN OF PUMP ANCHOR BOLTS AND PATTERN, INCLUDING CALCULATIONS, DURING SHOP DRAWING SUBMISSION.
5. CONTRACTOR TO PROVIDE ADHESIVE ANCHORS IN LIEU OF WEDGE ANCHORS FOR ALL SUBMERGED CONDITIONS AND SUBMIT DESIGN OF ANCHOR BOLTS DURING SHOP DRAWING SUBMISSION.
6. ALL PIPING IN THE WET WELL SHALL BE FLANGED. NO FLANGED COUPLING ADAPTORS, OR VICTAULIC STYLE COUPLINGS SHALL BE PERMITTED INSIDE OF THE WET WELL.
7. INSTALL PLUG VALVES TO OPEN UPWARD AND TO CLOSE TO A SEATING POSITION.
8. INSTALL CHECK VALVES SO THAT THE WEIGHT LEVER POSITION IS APPROXIMATELY 45° BELOW THE VALVE HORIZONTAL CENTER LINE IN THE CLOSE POSITION: AND APPROXIMATELY 45° ABOVE THE HORIZONTAL CENTER LINE IN THE FULL OPEN POSITION.
9. THE ACCESS HATCHES MUST BE WATERTIGHT AND PAINTED FOREST GREEN. THE SAFETY GRATING MUST BE PROVIDED WITH A SAFETY ORANGE POWDER COAT FINISH. COATING REQUIREMENTS SHALL BE IN COMPLIANCE WITH SPECIFICATION REQUIREMENTS.
10. LABEL HATCHES WITH THE CORRESPONDING PUMP NUMBER AND CHECK VALVES WITH THE CORRESPONDING VALVE NUMBER USING A 12–INCH BY 12–INCH PLATE ENGRAVED WITH 6–INCH LETTERING WELDED TO THE HATCHES AND ADHERED TO THE VALVES.
11. UV PROTECTIVE COATINGS ARE REQUIRED BY THE CITY OF HOUSTON ON ALL VENT PIPES.
12. PRESSURE GAUGES SHALL BE SUITABLE FOR WASTEWATER APPLICATIONS.
13. APPLY PROTECTIVE COATINGS TO PIPES, VALVES AND FITTINGS AS APPLICABLE. LABEL PIPING WITH DIRECTIONAL FLOW ARROWS IN COMPLIANCE WITH SPECIFICATION REQUIREMENTS
14. AIR RELEASE AND AIR VACUUM VALVES TO BE PROVIDED WITH STAINLESS STEEL BODIES IN COMPLIANCE WITH SPECIFICATION REQUIREMENTS.

NO.	DATE	REVISION	APP.

AMANI ENGINEERING, INC.
11011 RICHMOND AVENUE
SUITE 700
HOUSTON, TEXAS 77024
TEL: (713) 270–5700
TBPE REG. NO. F–4528
TBPELS REG. NO. 1028200

HATCH
750 TOWN & COUNTRY BLVD.
SUITE 650
HOUSTON, TEXAS 77024
P:832–930–7670
TX FIRM NUMBER: F–314

SURVEYED BY:
AMANI ENGINEERING,INC.
FB NO. P–6357

STATE OF TEXAS
DAVID L. BROWN
48282
REGISTERED
PROFESSIONAL
8/11/2026

CITY OF HOUSTON
HOUSTON PUBLIC WORKS

LIFT STATION RENEWAL & REPLACEMENT PROJECT

N.E. SLUDGE TRANSFER LIFT STATION
PROPOSED MECHANICAL TOP VIEW/BASE SECTION

WBS NUMBER	R–000267–0173–4
DRAWING SCALE	Scale 1"=2'
CITY OF HOUSTON PM	N.K. NUPUR KRISHNAN, PE

FOR CITY OF HOUSTON USE ONLY

HOUSTON PUBLIC WORKS
ACCEPTED AND FILED
82825
CITY DRAWING NUMBER
Approval Date 08/14/26
HOUSTON TX

F1M48 | SHEET NO. 184 OF 274

FILE NAME:
PLOTTED ON:

0 1 2 3 ORIGINAL SCALE IN INCHES FOR REDUCED PLANS

P:\Cad\2024\24013 - Hatch - COH FY20 Lift Stations\CAD_DWG\Phase II\LS- Phase II NORTHEAST SLUDGE TRANSFER\Phase II LS- NORTHEAST SLUDGE TRANSFER.dwg

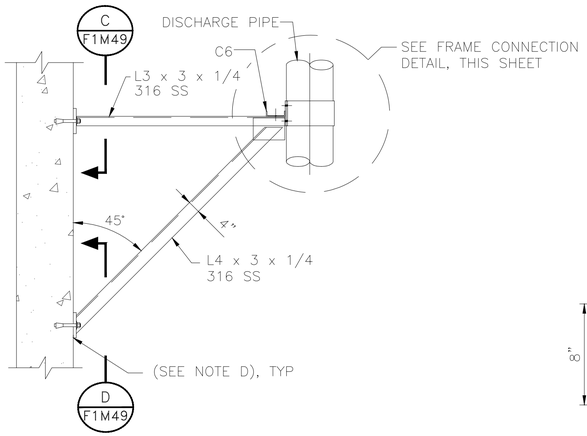

TYP LATERAL PIPE SUPPORT FRAME

SECTION A F1M49
N.T.S.

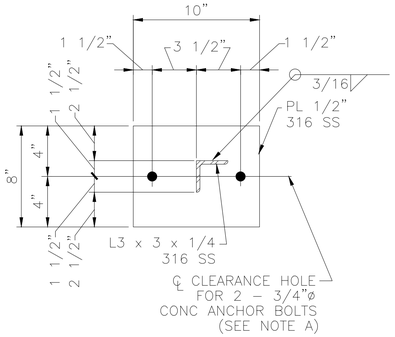

SECTION C F1M49
N.T.S.

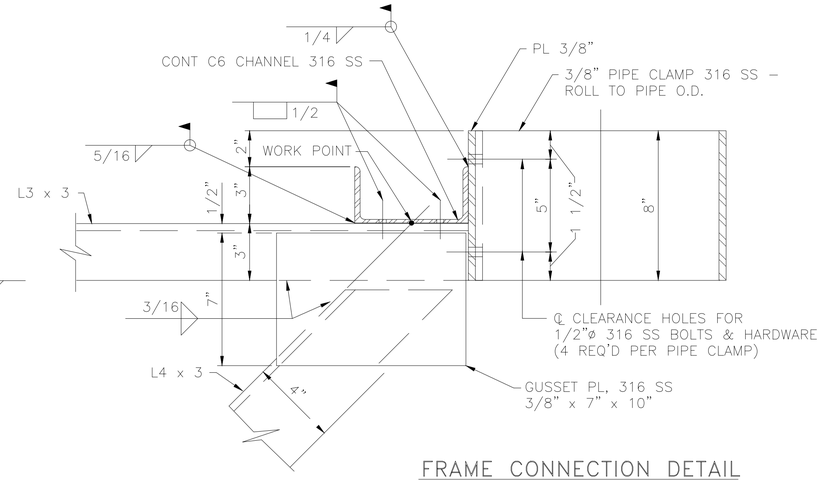

FRAME CONNECTION DETAIL
N.T.S.

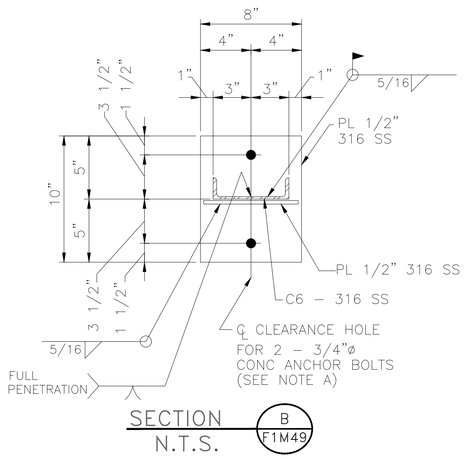

SECTION B F1M49
N.T.S.

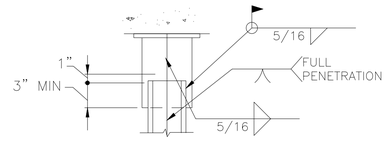

DETAIL E
N.T.S.

NOTES:

A. CONCRETE ANCHOR BOLTS SHALL HAVE 6" MINIMUM EMBEDMENT AND SHALL BE TYPE 316 STAINLESS STEEL, PER SPECIFICATIONS.

B. SEE STATION AND STRUCTURAL DRAWINGS FOR DIMENSIONS AND INFORMATION NOT SHOWN.

C. DRILL 3/8"ø HOLES, 1" OFF C OF C6 AT MIDSPAN BETWEEN LATERAL PIPE SUPPORTS TO ALLOW FOR DRAINAGE. 3 HOLES PER CHANNEL WHERE 2 LATERAL SUPPORTS REQUIRED; 2 HOLES PER CHANNEL WHERE 1 LATERAL SUPPORT REQUIRED.

D. SET 1/4" NEOPRENE GASKET ON WALL SURFACE IN SIKA 1A (OR EQUAL) SEALANT.

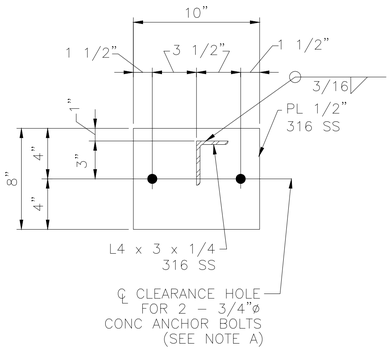

SECTION D F1M49
N.T.S.

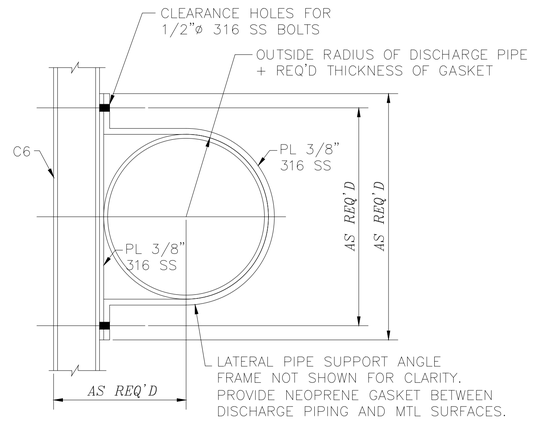

PIPE CLAMP DETAIL
N.T.S.

NO.	DATE	REVISION	APP.

AMANI ENGINEERING, INC.
11011 RICHMOND AVENUE
SUITE 700
HOUSTON, TEXAS 77024
TEL: (713) 270–5700
TBPE REG. NO. F–4528
TBPELS REG. NO. 1028200

HATCH
750 TOWN & COUNTRY BLVD.
SUITE 650
HOUSTON, TEXAS 77024
P:832–930–7670
TX FIRM NUMBER: F–314

SURVEYED BY:
AMANI ENGINEERING,INC.
FB NO. P–6357

STATE OF TEXAS
DAVID L. BROWN
48282
REGISTERED PROFESSIONAL ENGINEER
8/11/2026

CITY OF HOUSTON
HOUSTON PUBLIC WORKS

LIFT STATION RENEWAL & REPLACEMENT PROJECT

N.E. SLUDGE TRANSFER LIFT STATION
PROPOSED MECHANICAL DISCHARGE
PIPING SUPPORT DETAILS

WBS NUMBER	R–000267–0173–4
DRAWING SCALE	Scale N.T.S.
CITY OF HOUSTON PM	N.K. NUPUR KRISHNAN, PE
F1M49	SHEET NO. 185 OF 274

FOR CITY OF HOUSTON USE ONLY

HOUSTON PUBLIC WORKS
ACCEPTED AND FILED
82825
CITY DRAWING NUMBER
Approval Date 08/14/26
HOUSTON TX

FILE NAME:
PLOTTED ON:

0 1 2 3 ORIGINAL SCALE IN INCHES FOR REDUCED PLANS

P:\Cont\2024\24013 - Hatch - COH FY20 Lift Stations\CAD_DWG\Phase III\LS- Phase III NORTHEAST SLUDGE TRANSFER\Phase III LS- NORTHEAST SLUDGE TRANSFER.dwg

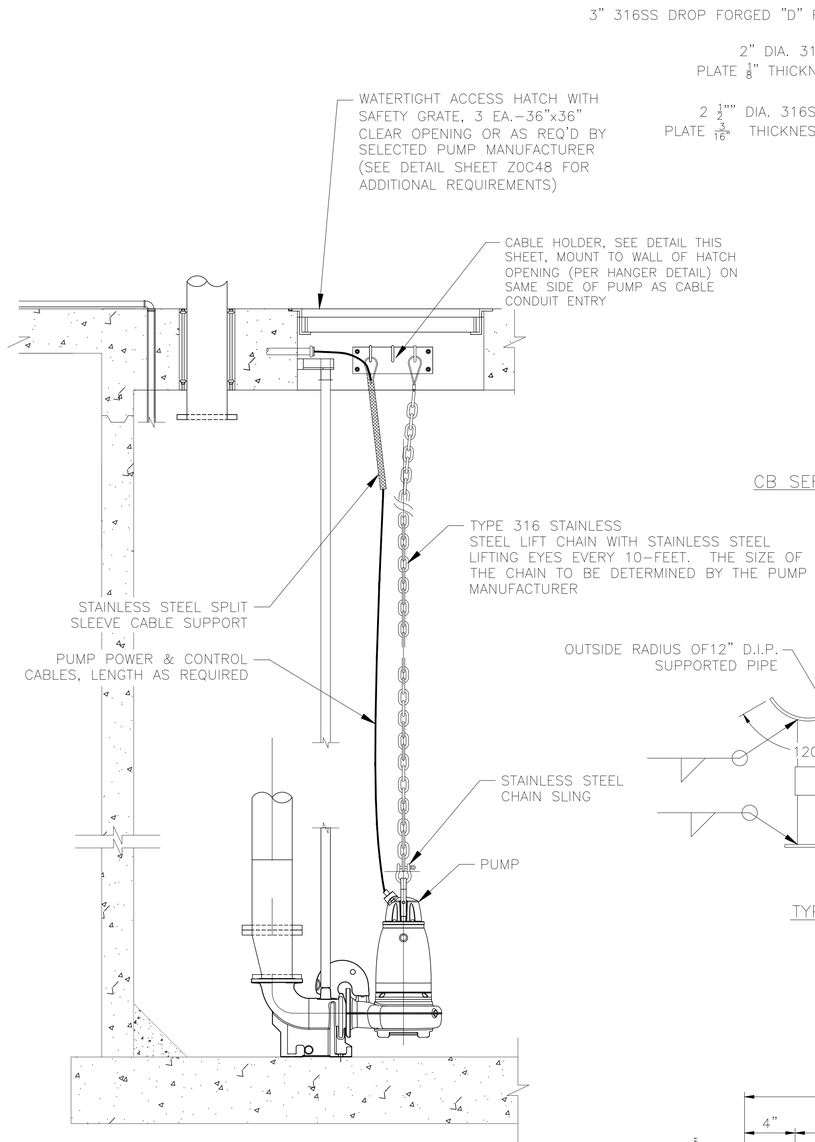

TYP PUMP LIFTING & CABLING DETAIL

DETAIL 3 / F1M50 — N.T.S.

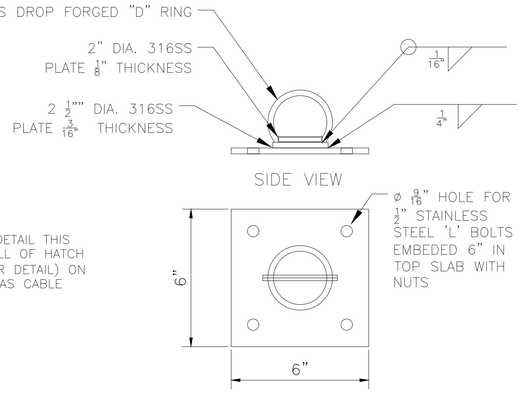

CB SERIES FALL PROTECTION CB–1B BOLT ANCHORED

DETAIL 1A / F1M50 — N.T.S.

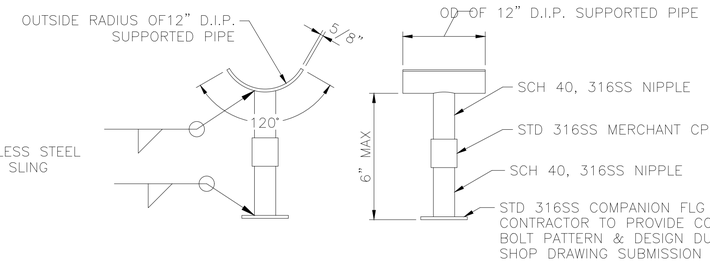

TYP ADJUSTABLE PIPE SUPPORT

DETAIL 2 / F1M50 — N.T.S.

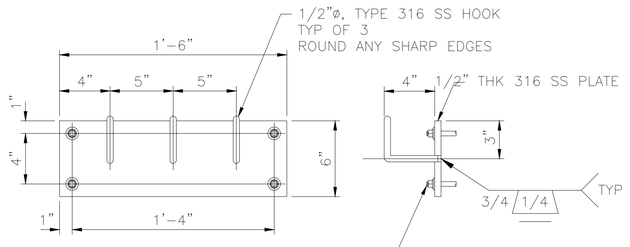

TYPICAL CABLE HOLDER ASSY

DETAIL 3A / F1M46 — N.T.S.

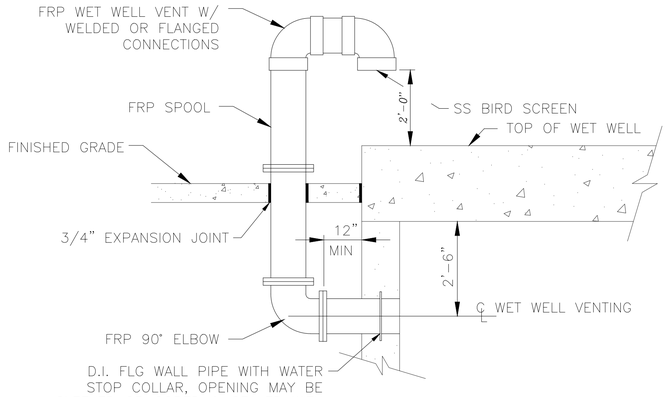

TYPICAL HIGH PROFILE WET WELL VENTING INSTALLATION

DETAIL 1 / F1M50 — N.T.S.

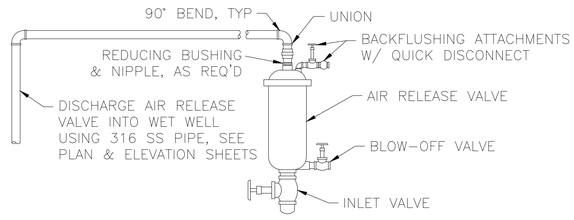

NOTE: PROVIDE STAINLESS STEEL VALVE BODY AND FITTINGS AS MAY BE REQUIRED BY SPECIFICATIONS

TYPICAL AIR RELEASE VALVE ASSY

DETAIL 10 / F1M50 — N.T.S.

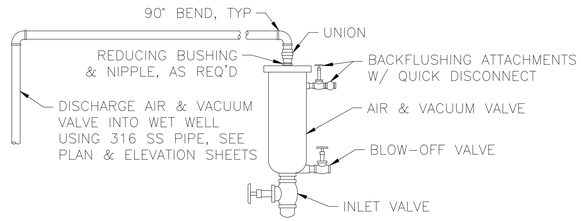

NOTE: PROVIDE STAINLESS STEEL VALVE BODY AND FITTINGS AS MAY BE REQUIRED BY SPECIFICATIONS

TYPICAL AIR & VACUUM VALVE ASSY

DETAIL 11 / F1M50 — N.T.S.

NO.	DATE	REVISION	APP.

AMANI ENGINEERING, INC.
11011 RICHMOND AVENUE
SUITE 700
HOUSTON, TEXAS 77024
TEL: (713) 270–5700
TBPE REG. NO. F–4528
TBPELS REG. NO. 1028200

HATCH
750 TOWN & COUNTRY BLVD.
SUITE 650
HOUSTON, TEXAS 77024
P:832–930–7670
TX FIRM NUMBER: F–314

SURVEYED BY:
AMANI ENGINEERING,INC.
FB NO. P–6357

STATE OF TEXAS — DAVID L. BROWN — 48282 — REGISTERED PROFESSIONAL ENGINEER
8/11/2026

CITY OF HOUSTON
HOUSTON PUBLIC WORKS

LIFT STATION RENEWAL & REPLACEMENT PROJECT

N.E. SLUDGE TRANSFER LIFT STATION
PROPOSED MECHANICAL DETAILS

WBS NUMBER	R–000267–0173–4
DRAWING SCALE	Scale N.T.S.
CITY OF HOUSTON PM	N.K. NUPUR KRISHNAN, PE
F1M50	SHEET NO. 186 OF 274

FOR CITY OF HOUSTON USE ONLY

HOUSTON PUBLIC WORKS
ACCEPTED AND FILED
82825
CITY DRAWING NUMBER
Approval Date 08/14/26
HOUSTON TX

FILE NAME:
PLOTTED ON:

0 1 2 3 ORIGINAL SCALE IN INCHES FOR REDUCED PLANS

P:\Cad\2024\24013 – Hatch – COH FY20 Lift Stations\CAD_DWG\Phase II\LS– NORTHEAST SLUDGE TRANSFER Phase II NORTHEAST SLUDGE TRANSFER Phase II\LS– NORTHEAST SLUDGE TRANSFER.dwg

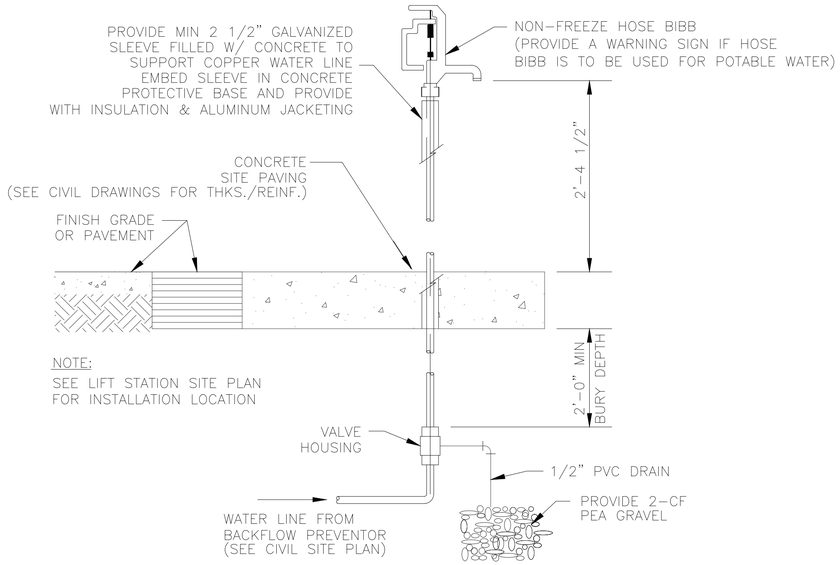

NOTE:
SEE LIFT STATION SITE PLAN FOR INSTALLATION LOCATION

NON-FREEZE HOSE BIBB DETAIL
N.T.S.

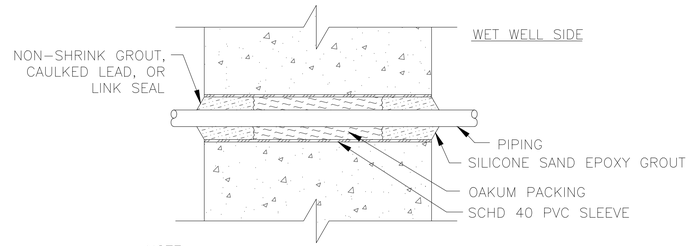

NOTE:
SLEEVED WET WELL PENETRATION IS NOT TO BE USED FOR CONDUIT INSTALLATION. SEE ELECTRICAL DETAIL SHEETS FOR CONDUIT PENETRATIONS.

SLEEVED WET WELL PENETRATION FOR PIPING 4"ø & SMALLER

DETAIL 6 F1M51
N.T.S.

NOTE: ALL FITTINGS SHALL BE STAINLESS STEEL (316)

PRESSURE GAUGE DETAIL

DETAIL 15 F1M51
N.T.S.

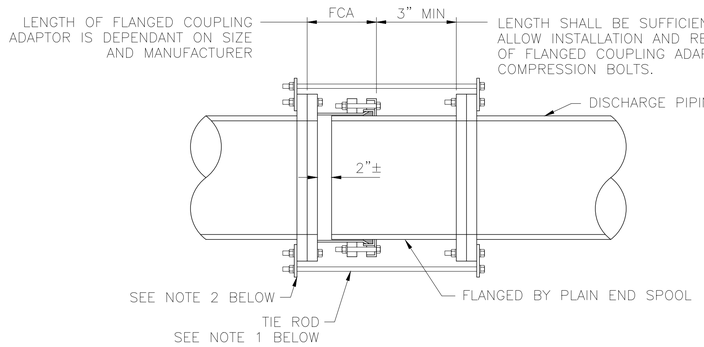

NOTES:

1. PROVIDE A NUMBER OF TIE RODS EQUAL TO 1/2 THE NUMBER OF FLANGE BOLTS. EVENLY SPACE INSTALLATION OF TIE RODS. DIAMETER OF TIE RODS TO BE EQUAL TO THE DIAMETER OF FLANGE BOLTS. LENGTH OF TIE RODS TO BE DETERMINED BY CONTRACTOR BASED ON SIZE AND MANUFACTURER OF FLANGED COUPLING ADAPTOR AND FINAL LENGTH OF SPOOL PIECE.
2. PROVIDE 316 SS TAB FOR ATTACHMENT OF TIE RODS. SIZE TO BE DETERMINED BY CONTRACTOR.
3. CONTRACTOR TO SUBMIT DETAILS DURING SHOP DRAWING SUBMISSION.
4. ALL HARDWARE SHALL BE 316 STAINLESS STEEL. TIE RODS SHOULD BE THREADED.
5. THIS RESTRAINT DOES NOT REPLACE THRUST BLOCKS TO BE PROVIDED AT OTHER LOCATIONS.

FLANGED COUPLING ADAPTOR RESTRAINT DETAIL

DETAIL 14 F1M51
N.T.S.

NO.	DATE	REVISION	APP.

AMANI ENGINEERING, INC.
11011 RICHMOND AVENUE
SUITE 700
HOUSTON, TEXAS 77024
TEL: (713) 270-5700
TBPE REG. NO. F-4528
TBPELS REG. NO. 1028200

HATCH
750 TOWN & COUNTRY BLVD.
SUITE 650
HOUSTON, TEXAS 77024
P:832-930-7670
TX FIRM NUMBER: F-314

SURVEYED BY:
AMANI ENGINEERING,INC.
FB NO. P-6357

STATE OF TEXAS
DAVID L. BROWN
48282
REGISTERED
PROFESSIONAL ENGINEER
8/11/2026

CITY OF HOUSTON
HOUSTON PUBLIC WORKS

LIFT STATION RENEWAL & REPLACEMENT PROJECT

N.E. SLUDGE TRANSFER LIFT STATION
PROPOSED MECHANICAL DETAILS

WBS NUMBER
R-000267-0173-4
DRAWING SCALE
Scale N.T.S.
CITY OF HOUSTON PM
N.K. NUPUR KRISHNAN, PE

FOR CITY OF HOUSTON USE ONLY
HOUSTON PUBLIC WORKS
ACCEPTED AND FILED
82825
CITY DRAWING NUMBER
Approval Date 08/14/26
HOUSTON TX

F1M51
SHEET NO. 187 OF 274

FILE NAME:
PLOTTED ON:

0 1 2 3 ORIGINAL SCALE IN INCHES FOR REDUCED PLANS

P:\Code\A\2024\24013 - Hatch - COH FY26 Lift Stations\CAD_DWG\Phase II\LS- Phase II NORTHEAST SLUDGE TRANSFER\Phase II LS- NORTHEAST SLUDGE TRANSFER.dwg

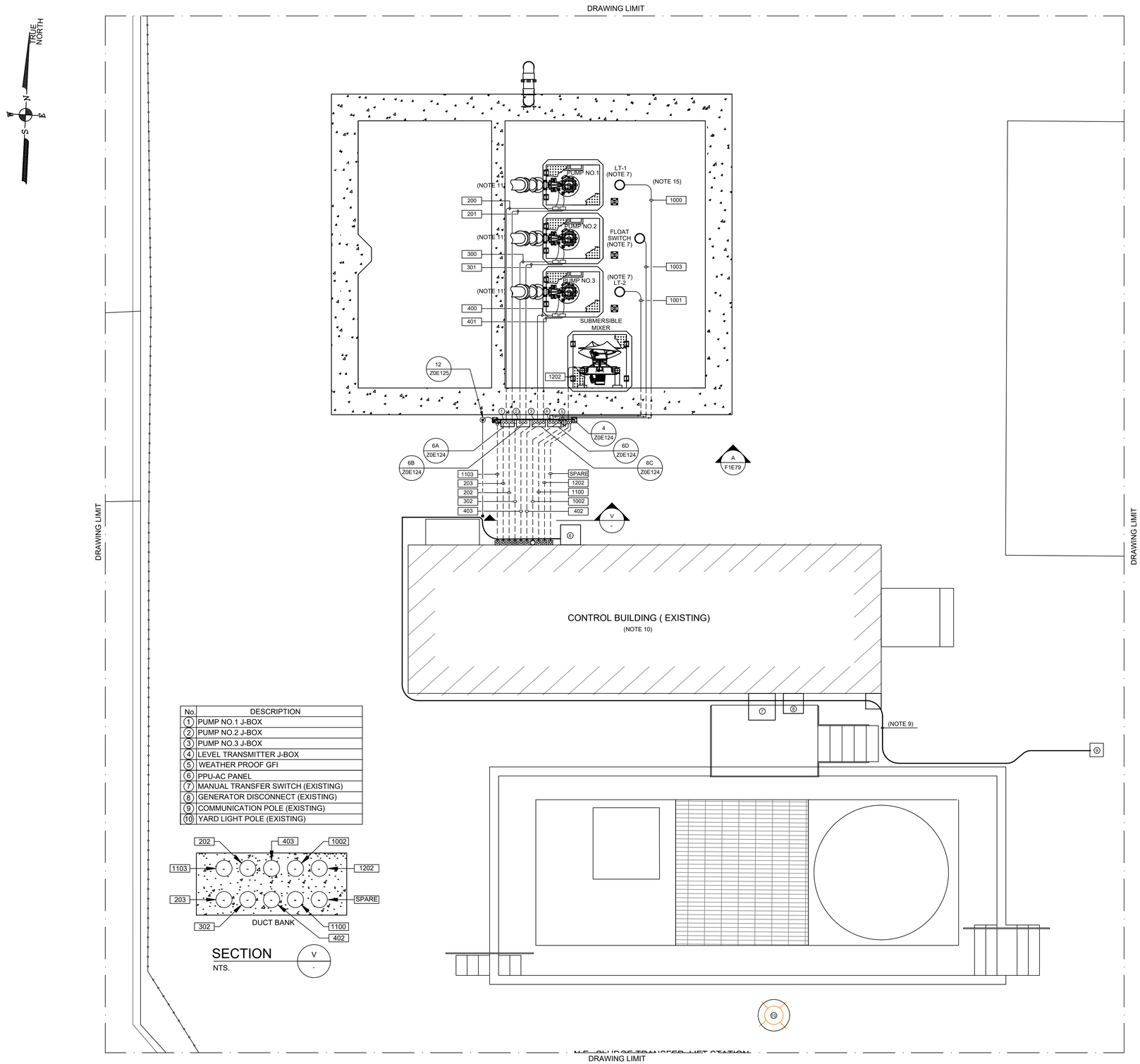

No.	DESCRIPTION
1	PUMP NO.1 J-BOX
2	PUMP NO.2 J-BOX
3	PUMP NO.3 J-BOX
4	LEVEL TRANSMITTER J-BOX
5	WEATHER PROOF GFI
6	PPU-AC PANEL
7	MANUAL TRANSFER SWITCH (EXISTING)
8	GENERATOR DISCONNECT (EXISTING)
9	COMMUNICATION POLE (EXISTING)
10	YARD LIGHT POLE (EXISTING)

NOTES:

1. GROUNDING SHALL BE PER N.E.C. MINIMUM REQUIREMENTS.
2. THE ELECTRICAL INSTALLATION WITHIN THE WET WELL SHALL BE EXPLOSION PROOF IN ACCORDANCE WITH ARTICLE 510 OF THE NEC FOR CLASS I, DIVISION 1, GROUP C & D.
3. WHERE JUNCTION BOXES ARE SHOWN, THEY SHALL BE USED FOR PULLING OR TERMINATION PURPOSES ONLY. SPLICES WILL NOT BE ALLOWED EXCEPT AS PROVIDED BY NOTE 5 AND AT LIGHTING AND RECEPTACLE TERMINATIONS.
4. FOR MOTOR FEEDER AND CONTROL CABLES, INSTALL TYPE CSBE CABLE SEALING FITTING AT JUNCTION BOX ENTRANCE AND EXPLOSION PROOF SEAL IN CONDUITS TO CONTROL BUILDING OR PANEL.
5. TERMINATE PUMP POWER & CONTROL CONDUITS WITH CSBE SEAL. ATTACH STAINLESS STEEL SPLIT SLEEVE CABLE SUPPORT ON EACH POWER AND CONTROL CABLE.
6. ALL PUMP POWER AND CONTROL CABLE LEADS MUST BE THE SAME LENGTH REGARDLESS OF PUMP LOCATION FROM TERMINAL/JUNCTION BOX.
7. LEVEL TRANSMITTERS AND FLOAT SWITCH SHOWN IN APPROXIMATE LOCATION. ACTUAL LOCATION SHALL FIELD VERIFY.
8. INSIDE WET WELL IS CLASSIFIED AS CLASS I, DIVISION 1. OUTSIDE WET WELL WITHIN 5 FEET OF WET WELL OPENINGS ARE CLASSIFIED AS CLASS I, DIVISION 2.
9. EXISTING ETHERNET CABLE AND CONDUIT INSTALLED FROM THE COMMUNICATION POLE TO THE EXISTING COMMUNICATION PANEL. THE CABLE WILL BE REMOVED FROM THE EXISTING PANEL AND RECONNECTED IN THE NEW PPU-AC PANEL.
10. FOR CONTROL BUILDING EQUIPMENT AND CONDUIT ARRANGEMENT SEE DRAWING NO. F1E80.
11. FOR MECHANICAL PLAN VIEW, SEE DRAWING No. F1M45.
12. BELOW-SURFACE CONDUIT RUNS SHALL HAVE TOTAL BENDS EQUAL TO OR LESS THAN 270 DEGREES. INSTALL HANDHOLES AT GRADE LEVEL WHERE NECESSARY.
13. GROUNDING LOOP SHALL BE BURIED 24" BELOW FINISHED GRADE.
14. EXOTHERMIC (THERMOWELD) CONNECTION OF #2/0 BARE COPPER GROUND CONDUCTOR TO REBAR.
15. CONDUIT WILL BE EMBEDDED IN THE TOP CONCRETE SLAB, NOT ON TOP OR BELOW THE SLAB.

NO.	DATE	REVISION	APP.

HATCH
750 TOWN & COUNTRY BLVD
SUITE 650
HOUSTON, TX 77024
P: 832-930-7670
TX FIRM NUMBER: F-314

SURVEYED BY:
AMANI ENGINEERING, INC.
FB NO. P-6357

STATE OF TEXAS
GUY N SEVERN
105809
LICENSED PROFESSIONAL ENGINEER
7/21/2026

CITY OF HOUSTON
HOUSTON PUBLIC WORKS

LIFT STATION RENEWAL & REPLACEMENT PROJECT
N.E. SLUDGE TRANSFER LS
ELECTRICAL SITE PLAN

WBS NUMBER
R-000267-0173-4
DRAWING SCALE
AS NOTED
CITY OF HOUSTON PM
NUPUR KRISHNAN P.E. N.K.

FOR CITY OF HOUSTON USE ONLY

HOUSTON PUBLIC WORKS
ACCEPTED AND FILED
82825
CITY DRAWING NUMBER
Approval Date 08/14/26
HOUSTON TX

F1E78

SHEET NO. 188 OF 274

PLOTTED: 8/25/2026 1:01 PM
PLOT STYLE: COH.ctb
FILE PATH: \\wusppplot01\d$\Global ProjectWise Plotting - WUS\Queue 3\queue3.dwg

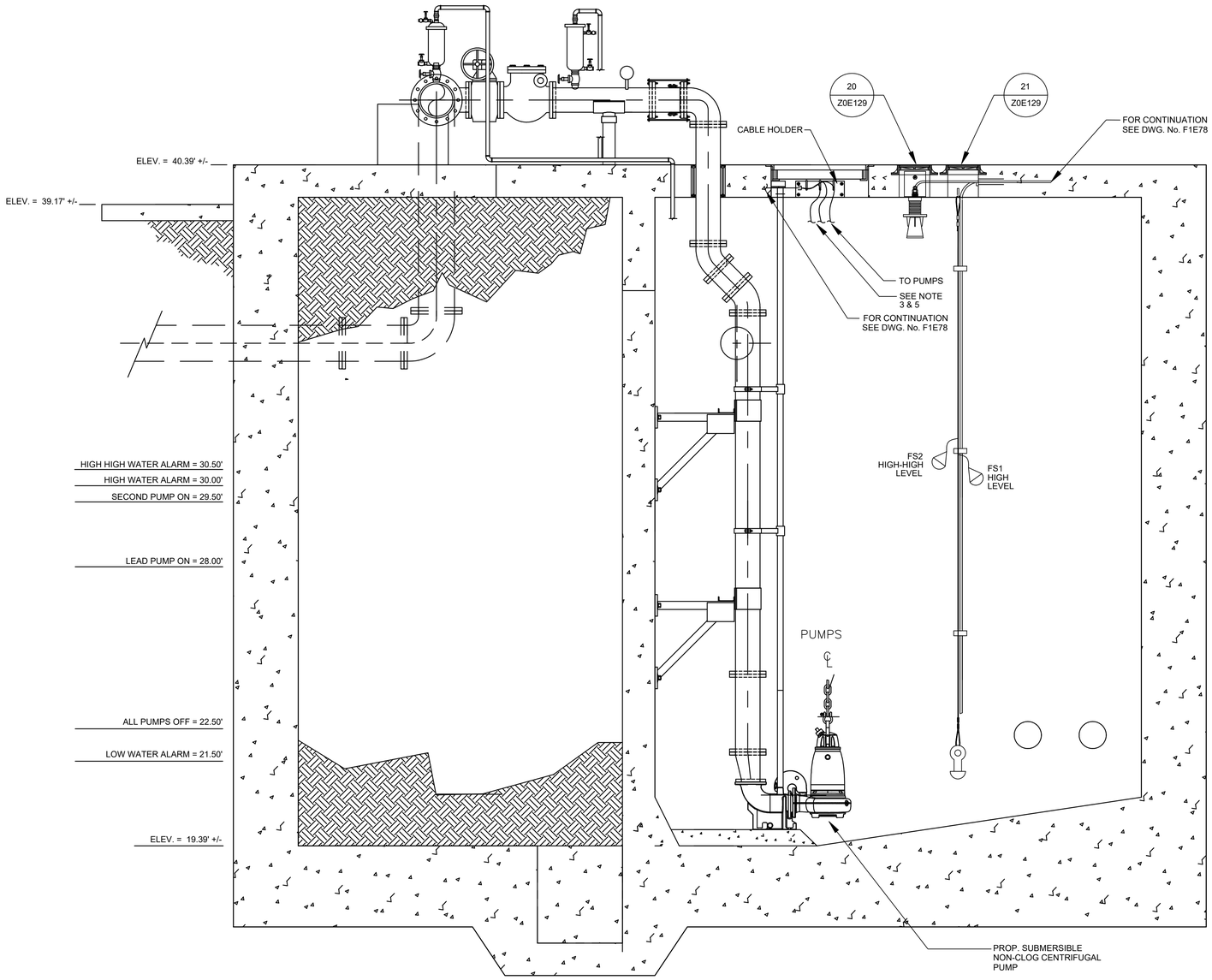

N.E. SLUDGE TRANSFER LS- LIFT STATION

A / - ELEVATION

SC.: 1/2"=1'-0"

NOTES:

1. GROUNDING SHALL BE PER N.E.C. MINIMUM REQUIREMENTS.
2. THE ELECTRICAL INSTALLATION WITHIN THE WET WELL SHALL BE EXPLOSION PROOF IN ACCORDANCE WITH ARTICLE 510 OF THE NEC FOR CLASS I, DIVISION I, GROUP C & D.
3. ALL PUMP POWER AND CONTROL CABLE LEADS MUST BE THE SAME LENGTH REGARDLESS OF PUMP LOCATION FROM TERMINAL/JUNCTION BOX.
4. FOR MOTOR FEEDER AND CONTROL CABLES. INSTALL TYPE CSBE CABLE SEALING FITTING AT JUNCTION BOX ENTRANCE AND EXPLOSION PROOF SEAL IN CONDUITS TO POWER & CONTROL PANEL.
5. TERMINATE PUMP POWER & CONTROL CONDUITS WITH CSBE SEAL. ATTACH STAINLESS STEEL SPLIT SLEEVE CABLE SUPPORT ON EACH POWER AND CONTROL CABLE.
6. INSTRUMENTS SHOWN IN APPROXIMATE LOCATION. ACTUAL LOCATION SHALL BE CONFIRMED DURING CONSTRUCTION.
7. FOR MECHANICAL ELEVATION SECTION, SEE DRAWING No. F1M46.

NO.	DATE	REVISION	APP.

HATCH
750 TOWN & COUNTRY BLVD
SUITE 650
HOUSTON, TX 77024
P: 832-930-7670
TX FIRM NUMBER: F-314

SURVEYED BY:
AMANI ENGINEERING, INC.
FB NO. P-6357

STATE OF TEXAS
GUY N SEVERN
105809
LICENSED
PROFESSIONAL ENGINEER
7/21/2026

CITY OF HOUSTON

HOUSTON PUBLIC WORKS

LIFT STATION RENEWAL & REPLACEMENT PROJECT

N.E. SLUDGE TRANSFER LS

LIFT STATION ELEVATION

WBS NUMBER	FOR CITY OF HOUSTON USE ONLY
R-000267-0173-4	HOUSTON PUBLIC WORKS ACCEPTED AND FILED 82825 CITY DRAWING NUMBER Approval Date 08/14/26 HOUSTON TX
DRAWING SCALE	
AS NOTED	
CITY OF HOUSTON PM	
NUPUR KRISHNAN P.E. N.K.	
F1E79	SHEET NO. 189 OF 274

PLOTTED: 8/11/2026 11:21 AM
PLOT STYLE: COH.ctb
FILE PATH: \\wusppplot01\d$\Global ProjectWise Plotting - WUS\Queue 4\queue4.dwg

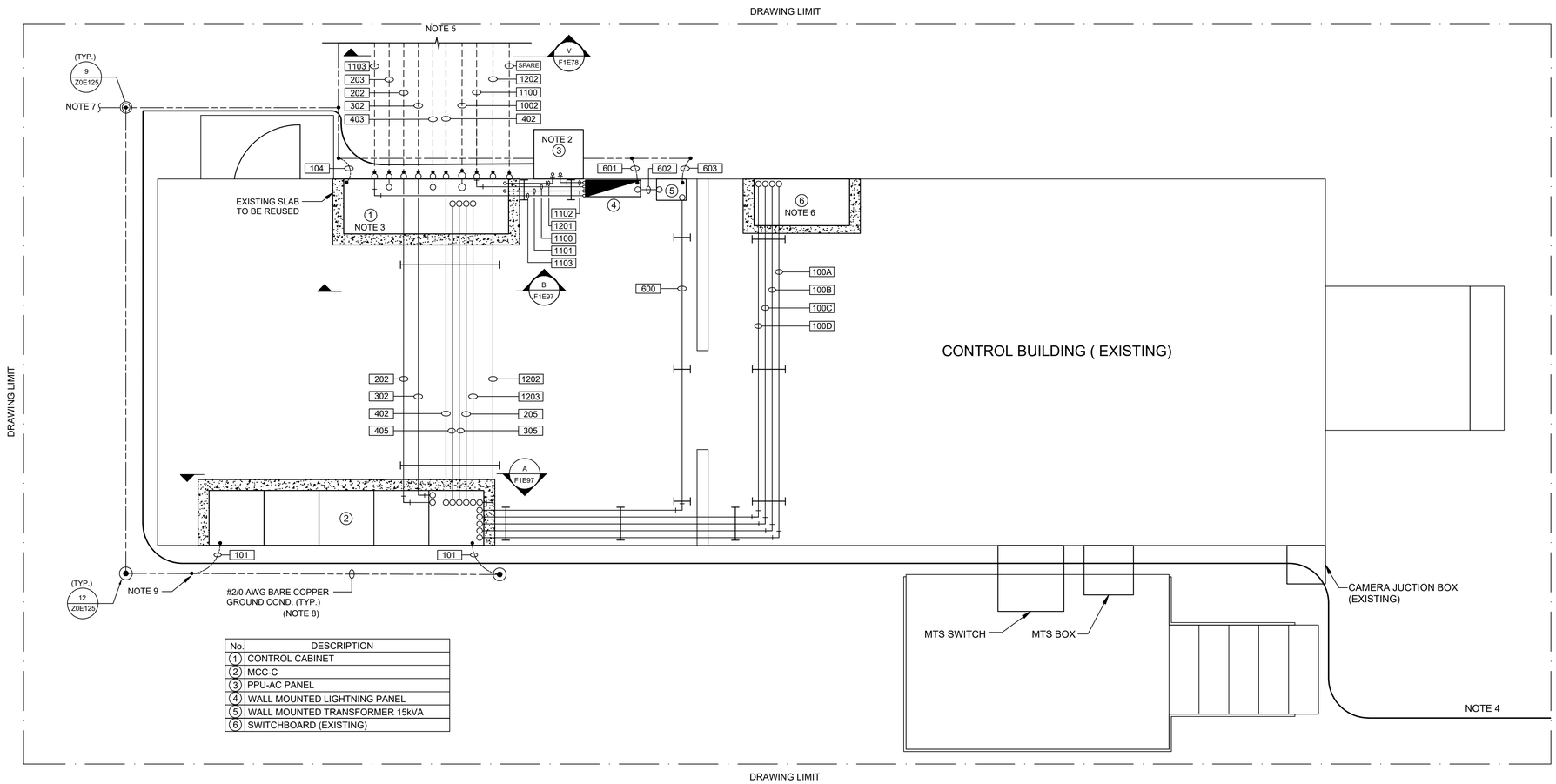

No.	DESCRIPTION
1	CONTROL CABINET
2	MCC-C
3	PPU-AC PANEL
4	WALL MOUNTED LIGHTNING PANEL
5	WALL MOUNTED TRANSFORMER 15kVA
6	SWITCHBOARD (EXISTING)

NO.	DATE	REVISION	APP.

NOTES:

1. FOR CONDUIT SCHEDULE SEE DRAWING NO. F1E98.
2. FOR PPU-AC PANEL SEE DRAWING NO. F1E87.
3. FOR CONTROL CABINET DETAIL SEE DRAWING NO. F1E81.
4. EXISTING ETHERNET CABLE AND CONDUIT INSTALLED FROM THE COMMUNICATION POLE TO THE EXISTING COMMUNICATION PANEL. THE CABLE WILL BE REMOVED FROM THE EXISTING PANEL AND RECONNECTED IN THE NEW PPU-AC PANEL.
5. FOR CONTINUATION SEE DRAWING NO. F1E78.
6. USE EXISTING SWITCHBOARD FEEDER TO POWER NEW MOTOR CONTROL CENTER MCC-C, FIELD ROUTE THE POWER CONDUIT.
7. EXTEND TO THE EXISTING GROUNDING.
8. GROUNDING LOOP SHALL BE BURIED 24" BELOW FINISHED GRADE.
9. EXOTHERMIC (THERMOWELD) CONNECTION OF #2/0 BARE COPPER GROUND CONDUCTOR TO REBAR.

HATCH
750 TOWN & COUNTRY BLVD
SUITE 650
HOUSTON, TX 77024
P: 832-930-7670
TX FIRM NUMBER: F-314

SURVEYED BY:
AMANI ENGINEERING, INC.
FB NO. P-6357

STATE OF TEXAS
GUY N SEVERN
105809
LICENSED PROFESSIONAL ENGINEER
7/21/2026

CITY OF HOUSTON
HOUSTON PUBLIC WORKS

LIFT STATION RENEWAL & REPLACEMENT PROJECT
N.E. SLUDGE TRANSFER LS

CONTROL BUILDING – ELECTRICAL

WBS NUMBER
R-000267-0173-4
DRAWING SCALE
AS NOTED
CITY OF HOUSTON PM
NUPUR KRISHNAN P.E. N.K.

FOR CITY OF HOUSTON USE ONLY

HOUSTON PUBLIC WORKS
ACCEPTED AND FILED
82825
CITY DRAWING NUMBER
Approval Date 08/14/26
HOUSTON TX

F1E80

SHEET NO. 190 OF 274

PLOTTED: 8/11/2026 11:19 AM
PLOT STYLE: COH.ctb
FILE PATH: \\wuspplot01\d$\Global ProjectWise Plotting - WUS\Queue 2\queue2.dwg

EQUIPMENT AND DEVICE SCHEDULE

ITEM	QTY.	DESCRIPTION
A	1	SINGLE CHANNEL INTRINSICALLY SAFE RELAY, ATC MODEL ISO-120-AFA
B	2	ANALOG I/O SURGE SUPPRESSOR EATON MODEL IOP32
C	3	PUMP PROTECTION MODULE RATED FOR CLASS I, DIVISION I, MINICAS II 83 58 57 24VDC/AC
D	2	CONTROL RELAY, 3 POLE, 120VAC CONTROL COIL - TURCK C3-A30X/120AC W/S3-S BASE
E	3	HAND-OFF-AUTO SWITCH, 3 POSITION, HEAVY-DUTY, OILTIGHT WITH 2 SETS OF CONTACT BLOCKS (PUMP CONTROL), ALLEN-BRADLEY MODEL 800H-JR2CF
F	3	INDICATING LIGHT, HEAVY DUTY, OILTIGHT, RED, 24 VDC, LED, WITH "RUN" LEGEND, ALLEN-BRADLEY MODEL 800H-QRTH2R
G	6	TERMINAL RAIL, STEEL GALVANIC ZINC, W: 2000 mm, H: 15 mm, D: 5.5 mm, WEIDMULLER ITEM No.0117510000
H	1	SWITCH FOR CABINET LIGHT, 120V, 20A, SPST, HUBBELL MODEL HBL1221I
I	2	DUPLEX RECEPTACLE, 120V, 20A, 2 WIRE, GROUNDED, HUBBELL MODEL HBL53621
J	1	24" LED STRIP LIGHT 120V SUITABLE FOR ZERO DEGREE OPERATION, HOFFMAN MODEL LF120V28
K	45	NAMEPLATES, SEE SPECIFICATIONS (SEE NAMEPLATE SCHEDULE)
L	2	PROGRAMMABLE LOGIC CONTROLLER WITH EXPANSION UNIT, SIEMENS MODEL 6ES7214-1HG40-0XB0
M	21	CONTROL RELAY, 3 POLE, 24VDC CONTROL COIL - TURCK C3-A30X/24DC W/S3-S BASE
N	31	TAG CARRIER, SCHT 5 WEIDMULLER, CATALOG NO. 0292460000
O	16	END BRACKET, WEW 35/2 WEIDMULLER, CATALOG NO. 1061200000
P	1	NEMA 12 GASKETED STEEL ENCLOSURES WITHOUT VENTS 72" H x 60" W x 20" D.
Q	157	TERMINAL BLOCKS, WEIDMULLER WDU 2.5, CATALOG NO. 1020000000
R	8	WIRE DUCT 2" WIDE X 3" DEEP MINIMUM, LENGTH 6', HELLERMANN TYTON MODEL SL2X3W4
S	1	GROUND BUS
T	1	COMMUNICATION ETHERNET SWITCH, SIEMENS MODEL SCALANCE X310FE
U	*	NOT USED
V	1	PUMP ALARM RESET PUSHBUTTON, ROCKWELL MODEL 800H-AR2BF
W	3	ANALOG INPUT MODULE, 4 ANALOG INPUT , SIEMENS MODEL SIMATIC S7-1200, 6ES7231-4HD32-0XB0
X	134	FUSED TERMINAL BLOCKS, WEIDMULLER WSI 6, CATALOG NO. 1011000000
Y	1	120VAC SURGE SURGE PROTECTOR WITH ALARM CONTACT - SURGE SUPPRESSION INC MODEL SDLA1P1
Z	1	PROGRAMMING SCREEN (OIT) - SIEMENS INDUSTRY TP900 - CONFORT TOUCH PANEL
AA	*	NOT USED
BB	1	120VAC - 24VDC PLC POWER SUPPLY 5A, PHOENIX CONTACT MODEL QUINT-PS/1AC/24DC/5
CC	1	DIGITAL INPUT MODULE, 16 DIGITAL INPUT 24 VDC , SIEMENS MODEL SIMATIC S7-1200, 6ES7221-1BH32-0XB0
DD	2	INDICATING LED LIGHT, HEAVY DUTY, OILTIGHT, GREEN, 24 VDC, LED WITH " PRIMARY PLC" & "BACKUP, PLC" LEGEND, ALLEN-BRADLEY AB 800H-QRTH2G
EE	2	ANALOG SIGNAL ISOLATOR, TURCK MODEL IMS-AI-DLI-22-DLI/L
FF	1	LED LIGHT FOR INDOOR/OUTDOOR USE, 24 VDC, COLOR RED, FEDERAL SIGNAL MODEL LP3PL-024R.

* - AS SCHEDULED

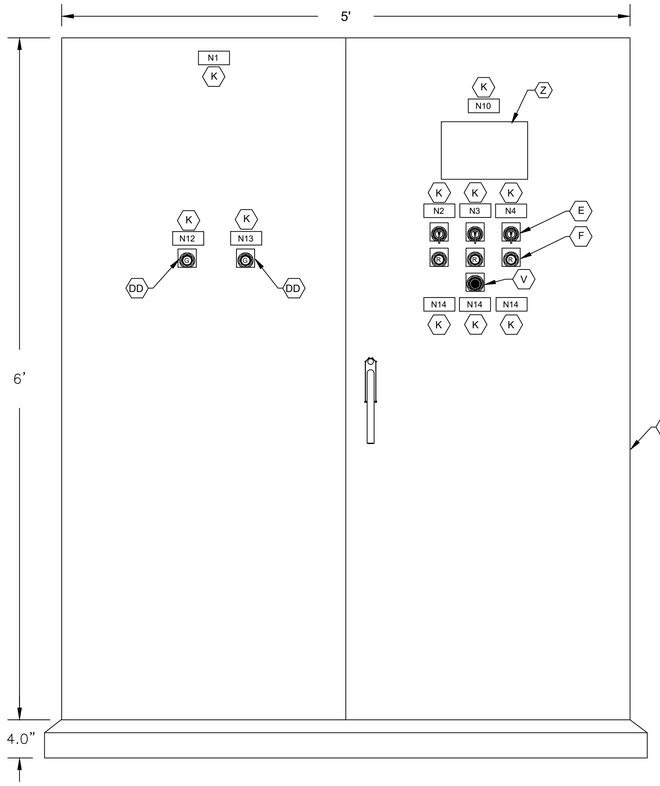

CONTROL CABINET
FRONT DOOR ELEVATION
SC.: 1-1/2"=1'-0"

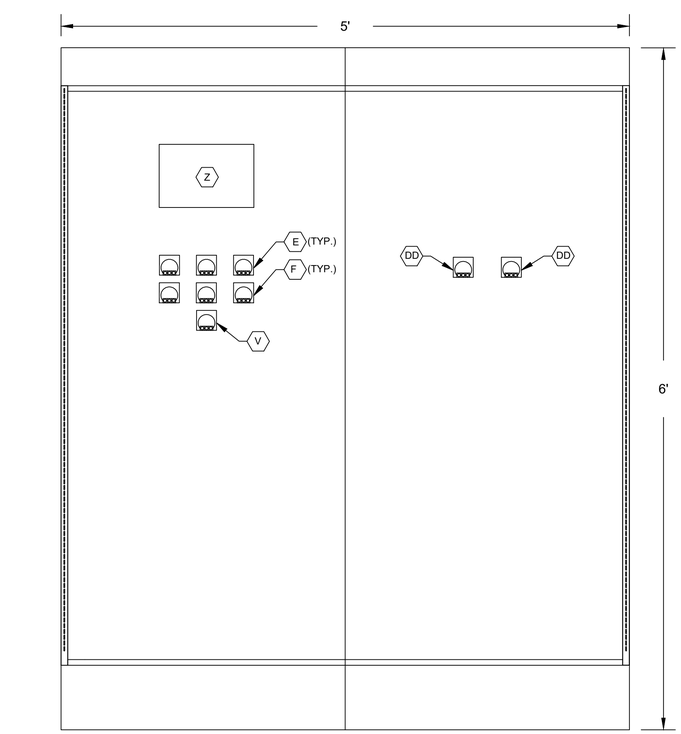

CONTROL PANEL BACK INNER DOOR
ELEVATION
SC.: 1-1/2"=1'-0"

NAMEPLATE SCHEDULE

DESIGNATION	ENGRAVED
N1	N.E. SLUDGE TRANSFER LS PUMP STATION
N2	PUMP NO. 1
N3	PUMP NO. 2
N4	PUMP NO. 3
N5	-
N6	-
N7	-
N8	-
N9	-
N10	PROGRAMMING SCREEN
N11	-
N12	PRIMARY PLC
N13	BACKUP PLC
N14	MOTOR DATA HORSEPOWER (OUTPUT) ---------- 70 RPM AT FULL LOAD ---------- 1775 MAX START PER HOUR ---------- 30 FREQUENCY ---------- 60 NUMBER OF PHASES ---------- 3 MODEL NUMBER ---------- RATED VOLTAGE ---------- 480 Vac SERVICE FACTOR ---------- 0.87 FULL LOAD AMPS ---------- 79 A INSULATION CLASS ---------- H NEMA DESIGN LETTER ---------- TEMPERATURE RISE ---------- NEMA FRAME SIZE ---------- DATE OF MANUFACTURE ---------- THERMO PROTECTION ---------- MOISTURE PROTECTION ----------

NO.	DATE	REVISION	APP.

HATCH
750 TOWN & COUNTRY BLVD
SUITE 650
HOUSTON, TX 77024
P: 832-930-7670
TX FIRM NUMBER: F-314

SURVEYED BY:
AMANI ENGINEERING, INC.
FB NO. P-6357

STATE OF TEXAS
GUY N SEVERN
105809
LICENSED
PROFESSIONAL ENGINEER
7/21/2026

CITY OF HOUSTON
HOUSTON PUBLIC WORKS

LIFT STATION RENEWAL & REPLACEMENT PROJECT
N.E. SLUDGE TRANSFER LS

CONTROL CABINET EQUIPMENT LAYOUT AND SCHEDULE

WBS NUMBER	FOR CITY OF HOUSTON USE ONLY
R-000267-0173-4	HOUSTON PUBLIC WORKS ACCEPTED AND FILED
DRAWING SCALE	82825 CITY DRAWING NUMBER
AS NOTED	Approval Date 08/14/26 HOUSTON TX
CITY OF HOUSTON PM	
NUPUR KRISHNAN P.E. N.K.	
F1E81	SHEET NO. 191 OF 274

PLOTTED: 8/11/2026 11:12 AM
PLOT STYLE: COH.ctb
FILE PATH: \\wusppipl01\d$\Global ProjectWise Plotting - WUS\Queue 5\queue5.dwg

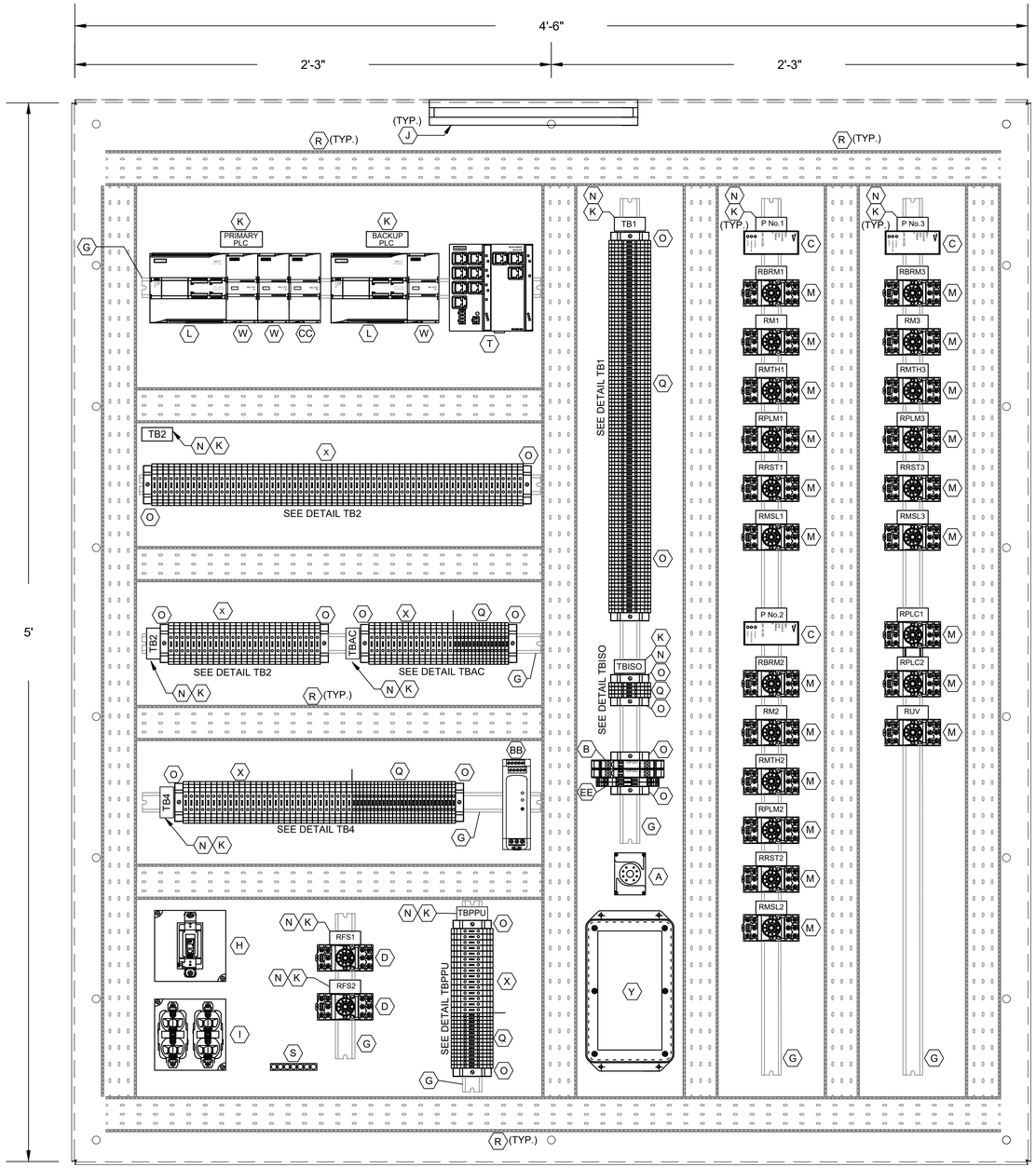

CONTROL PANEL
INTERNAL ARRANGEMENT
SC.: 3"=1'-0"

DETAIL TB1
L1A
L1N
SPARE
3
3N
SPARE
49
50
51
52
53
54
1004
1
24V-
24V-
SPARE
1002
2
11
1001
1001A
12
1003
1003A
34
3N
SPARE
SPARE
102
103
3P1
109
110
112
116
117
120
121
122
123
124
125
126
127
SPARE
SPARE
202
203
3P2
209
210
212
216
217
220
221
222
223
224
225
226
227
SPARE
SPARE
302
303
3P3
309
310
312
316
317
320
321
322
323
324
325
326
327
SPARE

DETAIL TB1 (cont.)
402
403
3P4
409
410
412
416
417
420
421
422
423
424
425
426
427

DETAIL TB2
36A
37A
50
52
54
52A
52A
54A
L+
M
35B
38B
41B
44B
47B
50B
53B
13B
13AB
13GB
L+
M
14B
14AB
14GB
119
L+
M
13
13A
13G
14
14A
14G
1M
2M
1L
3
30
32
34
37
38
41
33B
45
18B
100
112
113
114
115
117
118
119
120
121

DETAIL TB2
200
212
213
214
215
217
218
219
220
221
300
312
313
314
315
317
318
319
320
321

DETAIL TBPPU
L1
L2
L3
L4
L5
L6
L7
L8
L9
L10
L11
L12
L13
L14
L15
N1
N2
N3
N4
N5
N6
N7
N8
N9
N10
N11
N12
N13
N14
N15

DETAIL TBAC
1
2
3
4
5
6
7
8
9
10
11
12
13
14
15
16
17
18
19
20
21
22
23
24
25
26
27
28
23
30
N1
N2
N3
N4
N5
N6
N7
N8
N9
N10
N11
N12
N13
N14
N15

DETAIL TB4
1
2
3
4
5
6
7
8
9
10
11
12
13
14
15
16
17
18
19
20
21
22
23
24
25
N1
N2
N3
N4
N5
N6
N7
N8
N9
N10
N11
N12
N13
N14
N15

DETAIL TB-ISO
1500
1501
1503
1504

LEGEND

TAG	DESCRIPTION
RMTH	MOTOR HIGH TEMPERATURE ALARM RELAY
RPLM	PLC PUMP RUN RELAY
RRST	PUMP RESET AUX RELAY
RPLC	PLC MODE AUX RELAY
RM	PUMP RUN AUX RELAY
RBRM	BACKUP SYSTEM RUN RELAY
RUV	UNDER VOLTAGE RELAY
ISO	INTRINSICALLY SAFE RELAY
RFS	PUMP RUN FLOAT SWITCH RELAY
RMSL	MOTOR SEAL LEAK ALARM RELAY

NOTES:

1. SEE SHEET F1E81 FOR EQUIPMENT AND DEVICE SCHEDULE.

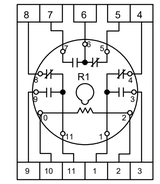

RELAY DETAIL
ITEM D

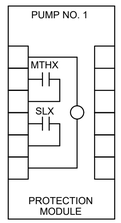

PUMP PROTECTION MODULE
DETAIL, ITEM C

REVISION	DATE	APP.

HATCH
750 TOWN & COUNTRY BLVD
SUITE 650
HOUSTON, TX 77024
P: 832-930-7670
TX FIRM NUMBER: F-314

SURVEYED BY:
AMANI ENGINEERING, INC.
FB NO. P-6357

STATE OF TEXAS
GUY N SEVERN
105809
LICENSED
PROFESSIONAL ENGINEER
7/21/2026

CITY OF HOUSTON
HOUSTON PUBLIC WORKS

LIFT STATION RENEWAL & REPLACEMENT PROJECT
N.E. SLUDGE TRANSFER LS

CONTROL CABINET EQUIPMENT LAYOUT

WBS NUMBER
R-000267-0173-4
DRAWING SCALE
AS NOTED
CITY OF HOUSTON PM
NUPUR KRISHNAN P.E. N.K.
SHEET NO. 192 OF 274

FOR CITY OF HOUSTON USE ONLY

HOUSTON PUBLIC WORKS
ACCEPTED AND FILED
82825
CITY DRAWING NUMBER
Approval Date 08/14/26
HOUSTON TX

F1E82

PLOTTED: 8/11/2026 11:19 AM
PLOT STYLE: COH.ctb
FILE PATH: \\wuspploto1\c$\Global ProjectWise Plotting - WUS\Queue 5\queue5.dwg

SHEET NOT USED

NO.	DATE	REVISION	APP.

HATCH
750 TOWN & COUNTRY BLVD
SUITE 650
HOUSTON, TX 77024
P: 832-930-7670
TX FIRM NUMBER: F-314

SURVEYED BY:
AMANI ENGINEERING, INC.
FB NO. P-6357

STATE OF TEXAS
MARK G. SCALLY
136279
LICENSED
PROFESSIONAL ENGINEER
5/11/26

CITY OF HOUSTON
HOUSTON PUBLIC WORKS

LIFT STATION RENEWAL & REPLACEMENT PROJECT
N.E. SLUDGE TRANSFER LS

WBS NUMBER
R-000267-0173-4
DRAWING SCALE
AS NOTED
CITY OF HOUSTON PM
NUPUR KRISHNAN P.E. N.K.
SHEET NO. 193 OF 274

FOR CITY OF HOUSTON USE ONLY

HOUSTON
PUBLIC WORKS
ACCEPTED AND FILED
82825
CITY DRAWING NUMBER
Approval Date 08/14/26
HOUSTON TX

F1E83

PLOT STYLE: COH.ctb
PLOTTED: 8/11/2026 11:21 AM
FILE PATH: \\wusppplot01\d$\Global ProjectWise Plotting - WUS\Queue 1\queue1.dwg

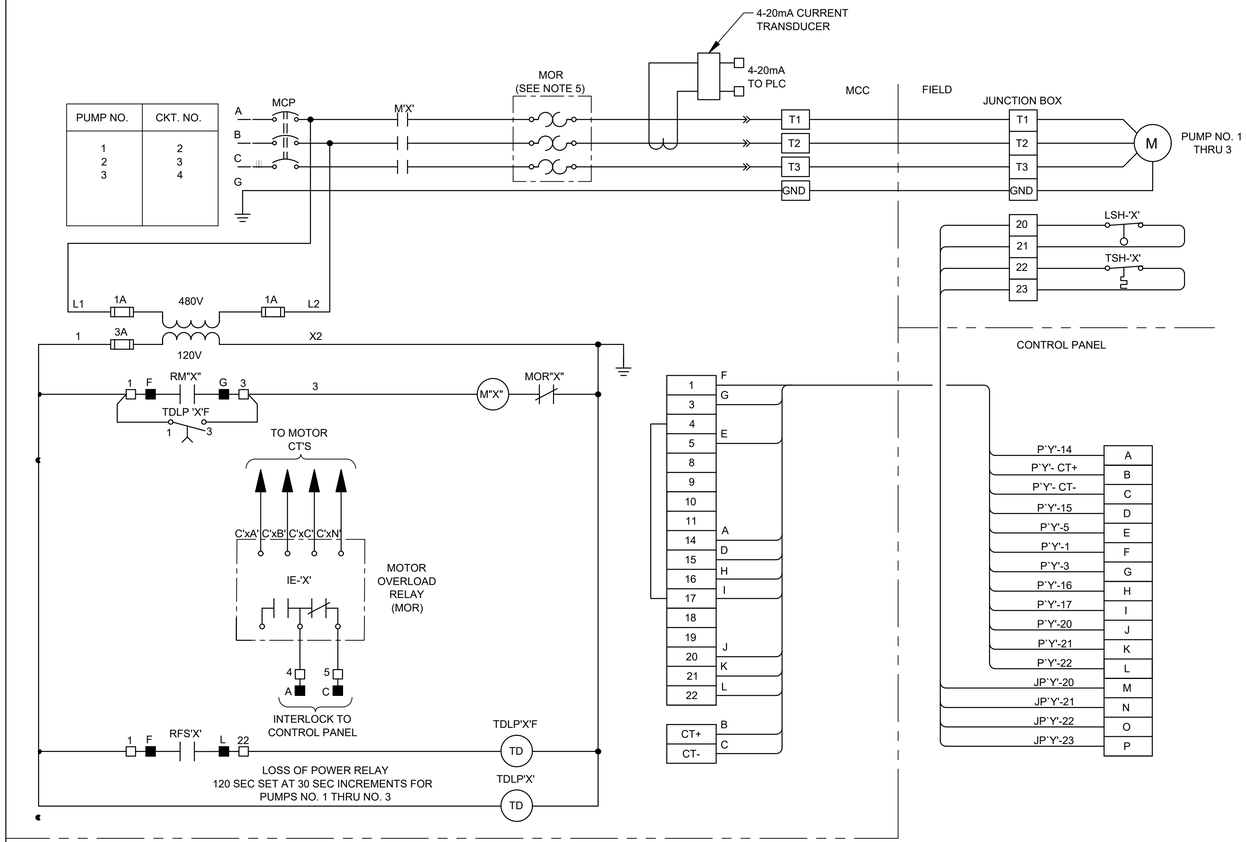

INDOOR MCC SCHEMATIC & WIRING DIAGRAM

SCHEMATIC 1 -

NOTES:

1. THE 'X' NOTATION IN SCHEMATIC DESIGNATIONS REPRESENTS APPLICABLE PUMP NO. 1, 2, 3.
2. THE 'Y" NOTATION INDICATES MCC CIRCUIT NUMBER.
3. UNLESS OTHERWISE INDICATED, ALL DEVICES WITHOUT FURTHER DESIGNATION ARE LOCATED AT THE MOTOR CONTROL CENTER (MCC).
4. MOTOR OVERLOAD RELAY OUTPUT CONTACT SHOWN IS NORMALLY CLOSED WHEN RELAY IS DE-ENERGIZED. OPEN WHEN ENERGIZED, AND CLOSED WHEN IN ALARM. (VERIFY OPERATION OF RELAY PROVIDED AND ADJUST CONNECTION OF RMOR AUXILIARY RELAYS.)
5. MOTOR OVERLOAD RELAY.

LEGEND

- △ DEVICE OR FIELD TERMINAL LOCATED AT MOTOR
- * DEVICE OR FIELD TERMINAL LOCATED REMOTE
- □ DEVICE OR FIELD TERMINAL LOCATED AT POWER PANEL
- ■ FIELD TERMINAL LOCATED AT CONTROL PANEL
- ▲ REMOTE TERMINAL
- ● DEVICE TERMINAL NO.
- ◆ PC INTERFACE TERMINAL

WIRE TAG OR TERMINAL LABEL	PUMP NO. 1	PUMP NO. 2	PUMP NO. 3	FUNCTION
A	3P1	3P2	3P3	24VDC CONTROL
B	124	224	324	4-20mA CURRENT TRANSDUCER
C	125	225	325	4-20mA CURRENT TRANSDUCER
D	112	212	312	M CONTACT
E	117	217	317	PUMP OVERLOAD ALARM
F	109	209	309	RUN INTERLOCK
G	110	210	310	RUN INTERLOCK
H	102	202	302	LOSS OF POWER TIMER
I	103	203	303	LOSS OF POWER TIMER
J	126	226	326	ALARM RESET INTERLOCK
K	127	227	327	ALARM RESET INTERLOCK
L	116	216	316	FLOAT SWITCH RUN INTERLOCK
M	120	220	320	SEAL LEAK DETECTOR
N	121	221	321	SEAL LEAK DETECTOR
O	122	222	322	MOTOR TEMPERATURE SWITCH
P	123	223	323	MOTOR TEMPERATURE SWITCH

NO.	DATE	REVISION	APP.

HATCH
750 TOWN & COUNTRY BLVD
SUITE 650
HOUSTON, TX 77024
P: 832-930-7670
TX FIRM NUMBER: F-314

SURVEYED BY:
AMANI ENGINEERING, INC.
FB NO. P-6357

STATE OF TEXAS
GUY N SEVERN
105809
LICENSED
PROFESSIONAL ENGINEER
7/21/2026

CITY OF HOUSTON
HOUSTON PUBLIC WORKS

LIFT STATION RENEWAL & REPLACEMENT PROJECT
N.E. SLUDGE TRANSFER LS

MCC SCHEMATIC AND WIRING DIAGRAM

WBS NUMBER	FOR CITY OF HOUSTON USE ONLY
R-000267-0173-4	HOUSTON PUBLIC WORKS ACCEPTED AND FILED 82825 CITY DRAWING NUMBER Approval Date 08/14/26 HOUSTON TX
DRAWING SCALE	
AS NOTED	
CITY OF HOUSTON PM	
NUPUR KRISHNAN P.E. N.K.	
F1E84	SHEET NO. 194 OF 274

PLOTTED: 8/11/2026 11:25 AM
PLOT STYLE: COH.ctb
FILE PATH: \\wusppplot01\d$\Global ProjectWise Plotting - WUS\Queue 1\queue1.dwg

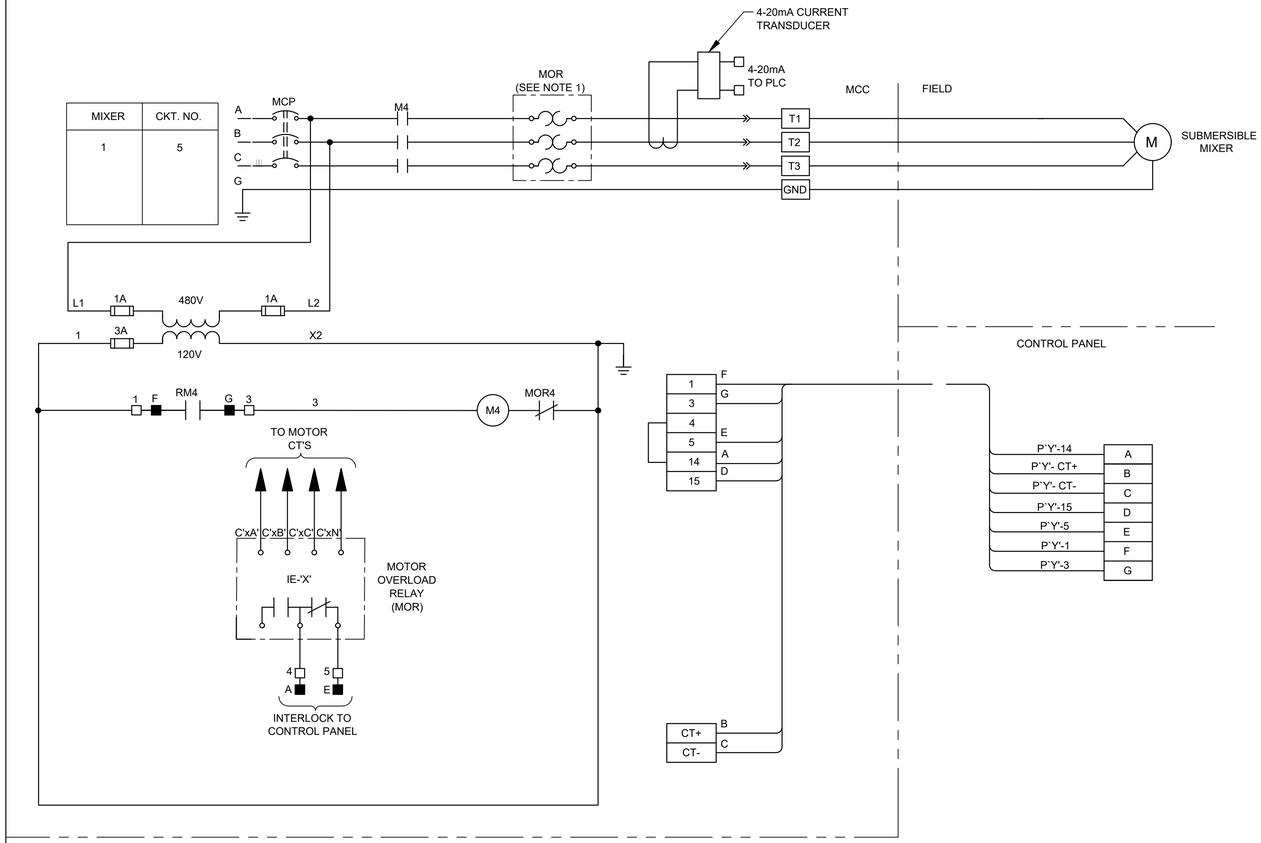

NOTES:

1. MOTOR OVERLOAD RELAY.
2. THE 'Y" NOTATION INDICATES MCC CIRCUIT NUMBER.
3. UNLESS OTHERWISE INDICATED, ALL DEVICES WITHOUT FURTHER DESIGNATION ARE LOCATED AT THE MOTOR CONTROL CENTER (MCC).
4. MOTOR OVERLOAD RELAY OUTPUT CONTACT SHOWN IS NORMALLY CLOSED WHEN RELAY IS DE-ENERGIZED. OPEN WHEN ENERGIZED, AND CLOSED WHEN IN ALARM. (VERIFY OPERATION OF RELAY PROVIDED AND ADJUST CONNECTION OF RMOR AUXILIARY RELAYS.)

NO.	DATE	REVISION	APP.

LEGEND

- △ DEVICE OR FIELD TERMINAL LOCATED AT MOTOR
- * DEVICE OR FIELD TERMINAL LOCATED REMOTE
- □ DEVICE OR FIELD TERMINAL LOCATED AT POWER PANEL
- ■ FIELD TERMINAL LOCATED AT CONTROL PANEL
- ▲ REMOTE TERMINAL
- ● DEVICE TERMINAL NO.
- ◆ PC INTERFACE TERMINAL

WIRE TAG OR TERMINAL LABEL	MIXER NO.	FUNCTION
A	3P4	24VDC CONTROL
B	424	4-20mA CURRENT TRANSDUCER
C	425	4-20mA CURRENT TRANSDUCER
D	412	M CONTACT
E	417	MIXER OVERLOAD ALARM
F	409	RUN INTERLOCK
G	410	RUN INTERLOCK

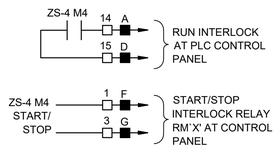

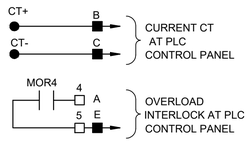

INDOOR MCC SCHEMATIC & WIRING DIAGRAM

SCHEMATIC 1 -

HATCH
750 TOWN & COUNTRY BLVD
SUITE 650
HOUSTON, TX 77024
P: 832-930-7670
TX FIRM NUMBER: F-314

SURVEYED BY:
AMANI ENGINEERING, INC.
FB NO. P-6357

STATE OF TEXAS
GUY N SEVERN
105809
LICENSED PROFESSIONAL ENGINEER
7/21/2026

CITY OF HOUSTON

HOUSTON PUBLIC WORKS

LIFT STATION RENEWAL & REPLACEMENT PROJECT

N.E. SLUDGE TRANSFER LS

MCC SCHEMATIC AND WIRING DIAGRAM SUBMERSIBLE MIXER

WBS NUMBER
R-000267-0173-4
DRAWING SCALE
AS NOTED
CITY OF HOUSTON PM
NUPUR KRISHNAN P.E. N.K.

FOR CITY OF HOUSTON USE ONLY

HOUSTON PUBLIC WORKS
ACCEPTED AND FILED
82825
CITY DRAWING NUMBER
Approval Date 08/14/26
HOUSTON TX

F1E85

SHEET NO. 195 OF 274

PLOTTED: 8/11/2026 11:22 AM
PLOT STYLE: COH.ctb
FILE PATH: \\wusppplot01\d$\Global ProjectWise Plotting - WUS\Queue 2\queue2.dwg

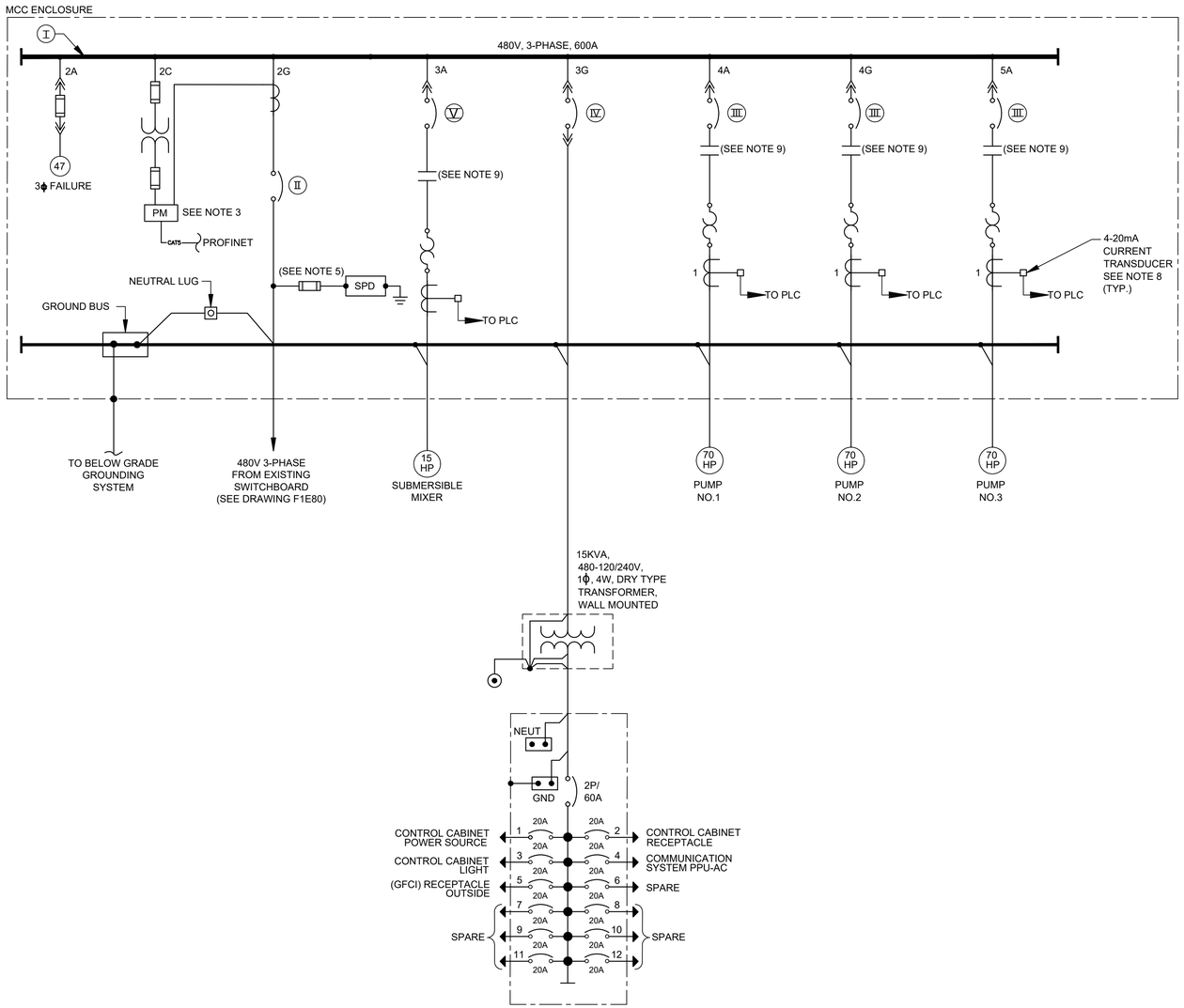

ITEM	CIRCUIT	DESCRIPTION	RATINGS FOR PUMP SIZES INDICATED 3 @ 70HP
I	--	MOTOR CONTROL CENTER MAIN BUS - 3/C COPPER	
		OPERATING VOLTAGE	480V
		CURRENT RATING	600A
		NEUTRAL SIZE & TYPE	400A LUG
		BUS BRACING	42KA SYM
II	2G (SEE NOTE 7)	MAIN BREAKER	
		3 POLE - TYPE	MOLDED CASE
		MOUNTING	FIXED
		OPERATING VOLTAGE	480V
		FRAME SIZE	400A
		TRIP SETTING	400A
		INTERRUPT CAPACITY	42KA SYM
		OPTIONS	NONE
III	4A 4G 5A	PUMP MOTOR STARTERS	
		QUANTITY	3
		MOUNTING (SEE NOTE 2)	FIXED
		SHORT CIRCUIT PROTECTION	
		3 POLE - TYPE	MCP
		OPERATING VOLTAGE	480V
		FRAME SIZE	150A
		TRIP SETTING	FIELD ADJ
		INTERRUPT CAPACITY	42KA SYM
		MOTOR STARTING CONTACTOR	
		3 POLE - TYPE	AIR
		OPERATING VOLTAGE	480V
		SIZE (SEE NOTE 9)	NEMA 4
		OVERLOAD PROTECTION TYPE	SOLID STATE MOR
		CT RATIO	50:5
IV	3G	LIGHTING TRANSFORMER FEEDER BREAKER	
		NO. OF POLES	2
		TYPE	MOLDED CASE
		OPERATING VOLTAGE	480V
		FRAME SIZE	100A
		TRIP SETTING	30A
		INTERRUPT CAPACITY	42KA SYM
V	3E	SUBMERSIBLE MIXER STARTER	
		QUANTITY	3
		MOUNTING (SEE NOTE 2)	FIXED
		SHORT CIRCUIT PROTECTION	
		3 POLE - TYPE	MCP
		OPERATING VOLTAGE	480V
		FRAME SIZE	150A
		TRIP SETTING	FIELD ADJ
		INTERRUPT CAPACITY	42KA SYM
		MOTOR STARTING CONTACTOR	
		3 POLE - TYPE	AIR
		OPERATING VOLTAGE	480V
		SIZE (SEE NOTE 9)	NEMA 2
		OVERLOAD PROTECTION TYPE	SOLID STATE MOR
		CT RATIO	50:5

NOTES:

1. FOR DESCRIPTION AND RATINGS OF ITEMS INDICATED WITH ROMAN NUMERAL FLAGS, SEE DEVICE RATINGS SCHEDULE.
2. DRAWOUT WHEN INSTALLED IN MCC CUBICLE.
3. CONTRACTOR SHALL VERIFY ACTUAL AMPERAGES OF MOTORS AND SIZE STARTERS, MOTOR CIRCUIT PROTECTORS, ETC. ACCORDINGLY.
4. POWER MONITOR.
5. PROVIDE FUSE ACCORDING TO MANUFACTURER'S REQUIREMENTS.
6. PROVIDE TRIP SETTING BASED ON GENERATOR SIZE. SIZES SHOWN ARE MAXIMUM.
7. PROVIDE BREAKER WITH KIRK KEY INTER-CONNECTED WITH GENERATOR/TRANSFER BREAKER.
8. PROVIDE 5A PRIMARY TO 4-20mA CURRENT TRANSDUCER.
9. NEMA SIZE 3 OR GREATER SHALL BE VACUUM TYPE.
10. SWITCH UNIT IN MCC.

NO.	DATE	REVISION	APP.

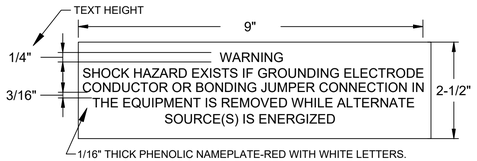

ELECTRICAL WARNING NAMEPLATE NEW ENGRAVING

LOAD CALCULATION			
ITEM	DESCRIPTION	HP	FLI*
1	PUMP NO. 1	70HP	100A
2	PUMP NO. 2	70HP	100A
3	PUMP NO. 3	70HP	0A
4	SUBMERSIBLE MIXER		21A
5	LIGHTING PANEL		18A
SUBTOTAL			239A
25% OF LARGEST MOTOR LOAD			25A
MINIMUM AMPACITY @480V, 3Φ			264A

* BASED ON SELECTED PUMP MFG DATA

HATCH
750 TOWN & COUNTRY BLVD
SUITE 650
HOUSTON, TX 77024
P: 832-930-7670
TX FIRM NUMBER: F-314

SURVEYED BY:
AMANI ENGINEERING, INC.
FB NO. P-6357

STATE OF TEXAS
GUY N SEVERN
105809
LICENSED
PROFESSIONAL ENGINEER
7/21/2026

CITY OF HOUSTON
HOUSTON PUBLIC WORKS

LIFT STATION RENEWAL & REPLACEMENT PROJECT
N.E. SLUDGE TRANSFER LS

SINGLE LINE DIAGRAM

WBS NUMBER	R-000267-0173-4
DRAWING SCALE	AS NOTED
CITY OF HOUSTON PM	NUPUR KRISHNAN P.E. N.K.
SHEET NO.	196 OF 274

FOR CITY OF HOUSTON USE ONLY
HOUSTON PUBLIC WORKS
ACCEPTED AND FILED
82825
CITY DRAWING NUMBER
Approval Date 08/14/26
HOUSTON TX

F1E86

PLOTTED: 8/25/2026 1:01 PM
PLOT STYLE: COH.ctb
FILE PATH: \\wuspplat01\d$\Global ProjectWise Plotting - WUS\Queue 2\queue2.dwg

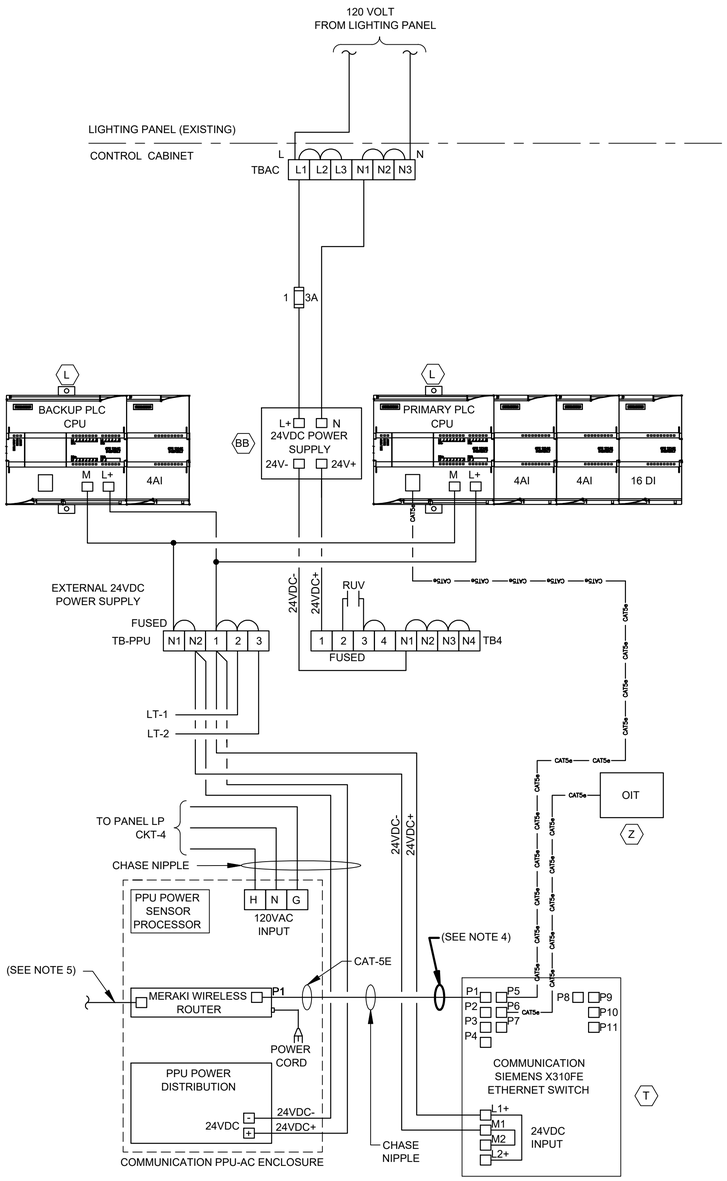

CONTROL POWER &
COMMUNICATIONS WIRING

DIAGRAM

NTS

(SEE NOTE 3)

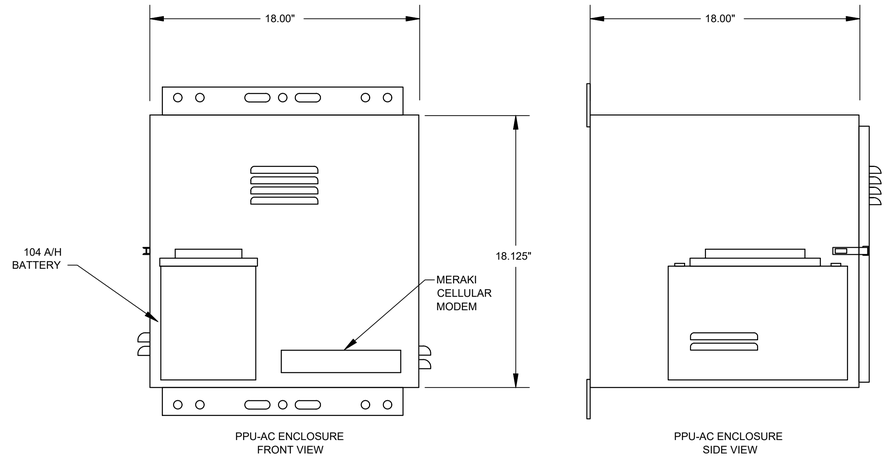

PPU-AC
CONTROL ENCLOSURE

ELEVATION

NTS

NOTES:

1. REFER TO SPEC SECTION 16120 FOR CONDUCTOR COLOR CODE.
2. THE PLC POWER SUPPLY SHALL FEED THE 24VDC I/O.
3. COMMUNICATION PPU-AC & SCADA SHALL BE PROVIDED BY CONTRACTOR INCLUDING TO RUN CONDUITS & WIRES.
4. ETHERNET CABLE FOR MERAKI CELLULAR ROUTER (P1).
5. POE CABLE TO RADIO.
6. SEE SHEET F1E81 FOR EQUIPMENT AND DEVICE SCHEDULE.

NO.	DATE	REVISION	APP.

HATCH
750 TOWN & COUNTRY BLVD
SUITE 650
HOUSTON, TX 77024
P: 832-930-7670
TX FIRM NUMBER: F-314

SURVEYED BY:
AMANI ENGINEERING, INC.
FB NO. P-6357

STATE OF TEXAS
GUY N SEVERN
105809
LICENSED
PROFESSIONAL ENGINEER
7/21/2026

CITY OF HOUSTON

HOUSTON PUBLIC WORKS

LIFT STATION RENEWAL & REPLACEMENT PROJECT

N.E. SLUDGE TRANSFER LS

COMMUNICATION DIAGRAM

WBS NUMBER
R-000267-0173-4
DRAWING SCALE
AS NOTED
CITY OF HOUSTON PM
NUPUR KRISHNAN P.E. N.K.

FOR CITY OF HOUSTON USE ONLY

HOUSTON
PUBLIC WORKS
ACCEPTED AND FILED
82825
CITY DRAWING NUMBER
Approval Date 08/14/26
HOUSTON TX

F1E87

SHEET NO. 197 OF 274

PLOTTED: 8/11/2026 11:12 AM

PLOT STYLE: COH.ctb

FILE PATH: \\wuspplot01\d$\Global ProjectWise Plotting - WUS\Queue 4\queue4.dwg

PLOTTED: 8/11/2026 11:13 AM
PLOT STYLE: COH.ctb
FILE PATH: \\wuspplot01\d$\Global ProjectWise Plotting - WUS\Queue 2\queue2.dwg

HMI

CONTROL CABINET PLC

CONTROL BUILDING (EXISTING)

PUMP NO. 1 | PUMP NO. 2 | PUMP NO. 3

SEAL FAIL ALARM (MA) | MOTOR OVERLOAD ALARM (MO) | MOTOR CURRENT (II) | HIGH TEMP ALARM (TH) | IN HAND (HI) | IN AUTO (IA) | ON/OFF (YFS) | START/STOP (YCS)

PRIMARY PLC: ALARMS RESET (RE 1); FLOAT HIGH-HIGH WETWELL LEVEL (LAHH 1A)

BACKUP PLC: PUMP NO. 1 START/STOP (YCS 1A); PUMP NO. 2 START/STOP (YCS 2A); PUMP NO. 3 START/STOP (YCS 3A)

480V — MCC

PUMP NO. 1 H/O/A (T) RUN (R) | PUMP NO. 2 H/O/A (T) RUN (R) | PUMP NO. 3 H/O/A (T) RUN (R)

PRIMARY PLC (G) | BACKUP PLC (G)

PUMP CONTROL PANEL: ALARMS RESET | OIT

TO SHEET F1E89

F1E89

F1E89

WET WELL

LT 1 / LE 1

LT 2 / LE 2

FS2 HIGH-HIGH LEVEL FLOAT SWITCH

LSH 1A / TSH 1A — PUMP NO.1

LSH 2A / TSH 2A — PUMP NO.2

FS1 HIGH LEVEL FLOAT SWITCH

LSH 3A / TSH 3A — PUMP NO.3

SUBMERSIBLE MIXER

XX"-DIP

XX"-DIP

XX"-DIP

XX"-DIP

XX"-DIP

DISCHARGE

REVISION

NO.	DATE	APP.

HATCH
750 TOWN & COUNTRY BLVD
SUITE 650
HOUSTON, TX 77024
P: 832-930-7670
TX FIRM NUMBER: F-314

SURVEYED BY:
AMANI ENGINEERING, INC.
FB NO. P-6357

STATE OF TEXAS
GUY N SEVERN
105809
LICENSED
PROFESSIONAL ENGINEER
7/21/2026

CITY OF HOUSTON
HOUSTON PUBLIC WORKS

LIFT STATION RENEWAL & REPLACEMENT PROJECT
N.E. SLUDGE TRANSFER LS

PROCESS & INSTRUMENTATION DIAGRAM-I

WBS NUMBER
R-000267-0173-4
DRAWING SCALE
AS NOTED
CITY OF HOUSTON PM
NUPUR KRISHNAN P.E. N.K.

FOR CITY OF HOUSTON USE ONLY

HOUSTON PUBLIC WORKS
ACCEPTED AND FILED
82825
CITY DRAWING NUMBER
Approval Date 08/14/26
HOUSTON TX

F1E88

SHEET NO. 198 OF 274

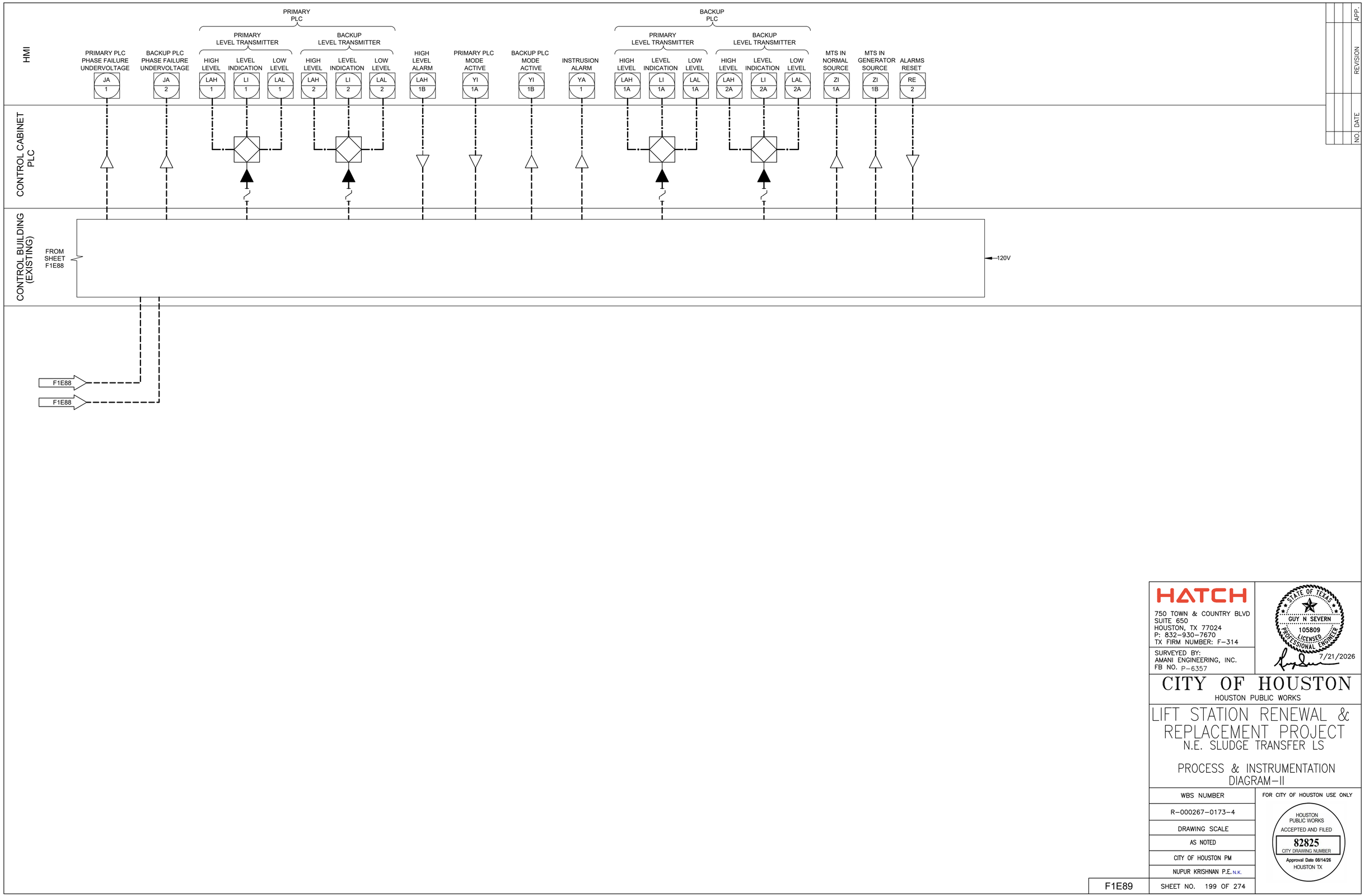

PLOTTED: 8/11/2026 11:15 AM

PLOT STYLE: COH.ctb

FILE PATH: \\wusppplot01\d$\Global ProjectWise Plotting - WUS\Queue 3\queue3.dwg

HATCH
750 TOWN & COUNTRY BLVD
SUITE 650
HOUSTON, TX 77024
P: 832-930-7670
TX FIRM NUMBER: F-314

SURVEYED BY:
AMANI ENGINEERING, INC.
FB NO. P-6357

STATE OF TEXAS
GUY N SEVERN
105809
LICENSED
PROFESSIONAL ENGINEER
7/21/2026

CITY OF HOUSTON

HOUSTON PUBLIC WORKS

LIFT STATION RENEWAL & REPLACEMENT PROJECT
N.E. SLUDGE TRANSFER LS

PROCESS & INSTRUMENTATION DIAGRAM-II

WBS NUMBER
R-000267-0173-4
DRAWING SCALE
AS NOTED
CITY OF HOUSTON PM
NUPUR KRISHNAN P.E. N.K.
SHEET NO. 199 OF 274

FOR CITY OF HOUSTON USE ONLY

HOUSTON PUBLIC WORKS
ACCEPTED AND FILED
82825
CITY DRAWING NUMBER
Approval Date 08/14/26
HOUSTON TX

F1E89

PLOTTED: 8/11/2026 11:12 AM
PLOT STYLE: COH.ctb
FILE PATH: \\wusppplot01\d$\Global ProjectWise Plotting - WUS\Queue 3\queue3.dwg

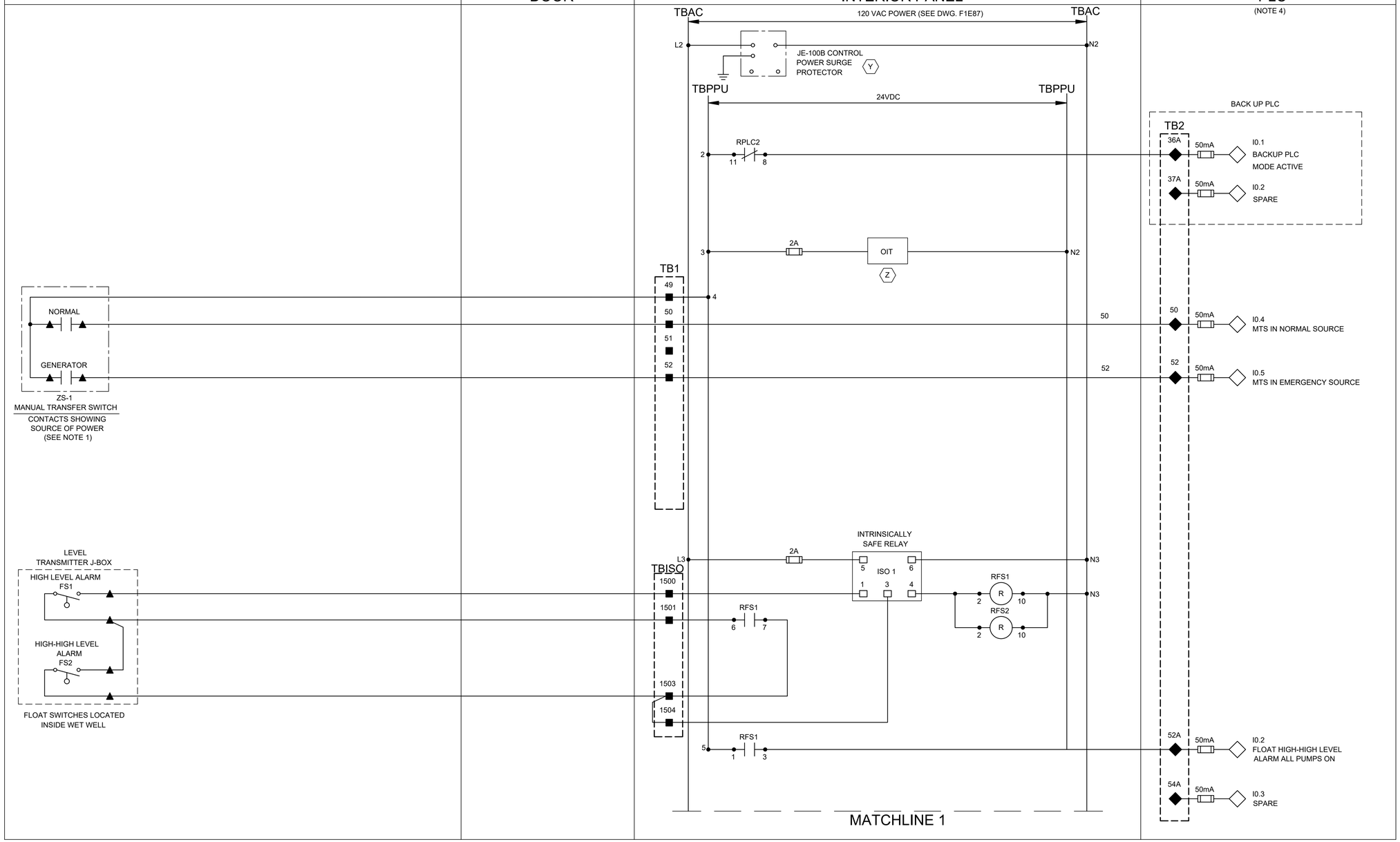

NOTES:

1. PROVIDE MANUAL TRANSFER SWITCH DRY CONTACT.
2. ALL FLOAT CONTROL CIRCUIT WIRES COLOR SHALL BE YELLOW.
3. SEE SHEET F1E81 FOR EQUIPMENT AND DEVICE SCHEDULE.
4. PRIMARY PLC UNLESS INDICATED OTHERWISE.

LEGEND

- △ DEVICE OR FIELD TERMINAL LOCATED AT MOTOR
- ✳ DEVICE OR FIELD TERMINAL LOCATED REMOTE
- □ DEVICE OR FIELD TERMINAL LOCATED AT MCC/POWER PANEL
- ■ FIELD TERMINAL LOCATED AT CONTROL PANEL
- ▲ REMOTE TERMINAL
- ● DEVICE TERMINAL NO.
- ◆ PLC INTERFACE TERMINAL

NO.	DATE	REVISION	APP.

HATCH
750 TOWN & COUNTRY BLVD
SUITE 650
HOUSTON, TX 77024
P: 832-930-7670
TX FIRM NUMBER: F-314

SURVEYED BY:
AMANI ENGINEERING, INC.
FB NO. P-6357

STATE OF TEXAS
GUY N SEVERN
105809
LICENSED
PROFESSIONAL ENGINEER
7/21/2026

CITY OF HOUSTON
HOUSTON PUBLIC WORKS

LIFT STATION RENEWAL & REPLACEMENT PROJECT
N.E. SLUDGE TRANSFER LS

CONTROL CABINET CONTROL WIRING DIAGRAM-I

WBS NUMBER
R-000267-0173-4
DRAWING SCALE
AS NOTED
CITY OF HOUSTON PM
NUPUR KRISHNAN P.E. N.K.

FOR CITY OF HOUSTON USE ONLY

HOUSTON PUBLIC WORKS
ACCEPTED AND FILED
82825
CITY DRAWING NUMBER
Approval Date 08/14/26
HOUSTON TX

F1E90

SHEET NO. 200 OF 274

FIELD	CONTROL BUILDING (EXISTING)		
	MOTOR CONTROL CENTER	CONTROL CABINET	
		DOOR	INTERIOR PANEL

TBAC TPPU MATCHLINE 1 TPPU TBAC

120 VAC POWER

24VDC

6

N3

RBRM1 — 5 — 2 R 10 — N4

RBRM2 — 6 — 2 R 10 — N5

RBRM3 — 7 — 2 R 10 — N6

TB1

1004

ANALOG ISOLATOR (EE): 1, 2, +, -, 3, 4, 5, 6

7

1

24-

8

1002

ANALOG ISOLATOR (EE): 1, 2, +, -, 3, 4, 5, 6

24V-

N7

2

9

11

1001

1001A

12

1003

1003A

ANALOG I/O SURGE SUPPRESSOR (B): 5, 6, 7, 8, 1, 2, 3, 4

24V+ — 1001B

24V+ — 1003B

RADAR LEVEL TRANSMITTER JUNCTION BOX

MFG. CABLE

PRIMARY RADAR LEVEL TRANSMITTER — LT-1

MFG. CABLE

BACKUP RADAR LEVEL TRANSMITTER — LT-2

MATCHLINE 2

PLC (NOTE 2)

BACK UP PLC

TB2

L+		CPU POWER
M		CPU COMMON
35B	1A	QO.0 PUMP NO.1 CALL TO RUN
38B	1A	QO.1 PUMP NO.2 CALL TO RUN
41B	1A	QO.2 PUMP NO.3 CALL TO RUN
47B	1A	QO.4 SPARE
13B	50mA	AIO.0 PRIMARY WET WELL LEVEL TRANSMITTER
13AB		
13GB		
L+		CPU POWER
M		CPU COMMON
14B	50mA	AIO.2 BACKUP WET WELL LEVEL TRANSMITTER
14AB		
14GB		
L+		CPU POWER
M		CPU COMMON
13	50mA	AIO.0 PRIMARY WET WELL LEVEL TRANSMITTER
13A		
13G		
14	50mA	AIO.2 BACKUP WET WELL LEVEL TRANSMITTER
14A		
14G		

NO.	DATE	REVISION	APP.

NOTES:

1. SEE SHEET F1E81 FOR EQUIPMENT AND DEVICE SCHEDULE.
2. PRIMARY PLC UNLESS INDICATED OTHERWISE.

LEGEND

- △ DEVICE OR FIELD TERMINAL LOCATED AT MOTOR
- ✳ DEVICE OR FIELD TERMINAL LOCATED REMOTE
- □ DEVICE OR FIELD TERMINAL LOCATED AT MCC/POWER PANEL
- ■ FIELD TERMINAL LOCATED AT CONTROL PANEL
- ▲ REMOTE TERMINAL
- ● DEVICE TERMINAL NO.
- ◆ PLC INTERFACE TERMINAL

HATCH
750 TOWN & COUNTRY BLVD
SUITE 650
HOUSTON, TX 77024
P: 832-930-7670
TX FIRM NUMBER: F-314

SURVEYED BY:
AMANI ENGINEERING, INC.
FB NO. P-6357

STATE OF TEXAS — GUY N SEVERN — 105809 — LICENSED PROFESSIONAL ENGINEER — 7/21/2026

CITY OF HOUSTON

HOUSTON PUBLIC WORKS

LIFT STATION RENEWAL & REPLACEMENT PROJECT

N.E. SLUDGE TRANSFER LS

CONTROL CABINET CONTROL WIRING DIAGRAM-II

WBS NUMBER	FOR CITY OF HOUSTON USE ONLY
R-000267-0173-4	HOUSTON PUBLIC WORKS ACCEPTED AND FILED 82825 CITY DRAWING NUMBER Approval Date 08/14/26 HOUSTON TX
DRAWING SCALE	
AS NOTED	
CITY OF HOUSTON PM	
NUPUR KRISHNAN P.E. N.K.	
SHEET NO. 201 OF 274	

F1E91

PLOTTED: 8/11/2026 11:15 AM
PLOT STYLE: COH.ctb
FILE PATH: \\wusppplot01\d$\Global ProjectWise Plotting - WUS\Queue 4\queue4.dwg

FIELD | MOTOR CONTROL CENTER | CONTROL BUILDING (EXISTING) — CONTROL CABINET — DOOR | INTERIOR PANEL | PLC (NOTE 2)

TBAC TPPU — MATCHLINE 2 — TPPU TBAC

120 VAC POWER

24VDC

TB2

L1
N
MS
MOTION SWITCH

L1
N
MS
MOTION SWITCH

TB3-34

ØA ØB ØC
JE-2 PHASE MONITOR
7 8 9 101112
N/C

YI-2 BUILDING EXTERIOR ALARM LIGHT
FF
R

8
9
10
11
12
13
14

L4
N4
N8
N9
N10
N11
N12
N13
N14

34

RUV
2 R 10

RPLC1
2 R 10

RPLC2
2 R 10

YI-1
G
PRIMARY PLC

RPLC2
6 5

YI-2
G
BACKUP PLC

RUV
11 9

1M — DI COMMON
2M — AI COMMON
1L — DO POWER
3 — DO POWER
30 — 1A — Q0.0 SPARE
32 — 50mA — I0.0 PLC INTRUSION ALARM
34 — 50mA — I0.1 PHASE FAILURE UNDER VOLTAGE
37 — 50mA — I0.3 SPARE
38 — 50mA — Q0.1 PLC MODE ACTIVE
41 — 50mA — I0.2 SPARE

BACK UP PLC
33B — 50mA — Q0.6 SPARE

45 — 50mA — Q0.2 HIGH LEVEL ALARM

BACK UP PLC
18B — 50mA — I0.0 PHASE FAILURE UNDER VOLTAGE

MATCHLINE 3

NO.	DATE	REVISION	APP.

NOTES:

1. SEE SHEET F1E81 FOR EQUIPMENT AND DEVICE SCHEDULE.
2. PRIMARY PLC UNLESS INDICATED OTHERWISE.

LEGEND

- △ DEVICE OR FIELD TERMINAL LOCATED AT MOTOR
- ✳ DEVICE OR FIELD TERMINAL LOCATED REMOTE
- □ DEVICE OR FIELD TERMINAL LOCATED AT MCC/POWER PANEL
- ■ FIELD TERMINAL LOCATED AT CONTROL PANEL
- ▲ REMOTE TERMINAL
- ● DEVICE TERMINAL NO.
- ◆ PLC INTERFACE TERMINAL

HATCH
750 TOWN & COUNTRY BLVD
SUITE 650
HOUSTON, TX 77024
P: 832-930-7670
TX FIRM NUMBER: F-314

SURVEYED BY:
AMANI ENGINEERING, INC.
FB NO. P-6357

STATE OF TEXAS — GUY N SEVERN — 105809 — LICENSED PROFESSIONAL ENGINEER — 7/21/2026

CITY OF HOUSTON
HOUSTON PUBLIC WORKS

LIFT STATION RENEWAL & REPLACEMENT PROJECT
N.E. SLUDGE TRANSFER LS

CONTROL CABINET CONTROL WIRING DIAGRAM-III

WBS NUMBER
R-000267-0173-4
DRAWING SCALE
AS NOTED
CITY OF HOUSTON PM
NUPUR KRISHNAN P.E. N.K.

FOR CITY OF HOUSTON USE ONLY

HOUSTON PUBLIC WORKS
ACCEPTED AND FILED
82825
CITY DRAWING NUMBER
Approval Date 08/14/26
HOUSTON TX

F1E92

SHEET NO. 202 OF 274

PLOTTED: 8/11/2026 11:18 AM
PLOT STYLE: COH.ctb
FILE PATH: \\wusppplot01\d$\Global ProjectWise Plotting - WUS\Queue 1\queue1.dwg

FIELD

CONTROL BUILDING (EXISTING)

MOTOR CONTROL CENTER

CONTROL CABINET

DOOR

INTERIOR PANEL

PLC

SUBMERSIBLE MIXER

M

T1 T2 T3 G

A B C

M4

4-20mA CURRENT TRANSDUCER

CT

MCP

MCC CKT 5

1A

3A

CPT - 480-120VAC 1PH, 250VA MIN

CT+

CT-

TB1

TB4

24 VDC POWER

TB4

TB2

424

425

26

412 50mA AI1.3 SUBMERSIBLE MIXER MOTOR CURRENT

403

27

HS-4 H-O-A

H O A

300

RM4

2 R 10

N19

400 1A Q1.2 SUBMERSIBLE MIXER CALL TO RUN

414 50mA I4.0 SUBMERSIBLE MIXER IN HAND

415 50mA I4.1 SUBMERSIBLE MIXER IN AUTO

M4

ZS-4

14

15

3P4

28

412

413

313

YI-4

R

N20

413 50mA I1.4 MIXER ON/OFF

MOTOR OVERLOAD RELAY (MOR) (SEE NOTE 1)

MOR4

B

4

5

417

417 50mA I4.3 SUBMERGIBLE MIXER MOTOR OVERLOAD ALARM

ZS-4 MOR4

M

M4

1

3

409

410

RM4

1 3

NOTES:

1. MOTOR OVERLOAD RELAY OUTPUT CONTACT SHOWN IS NORMALLY CLOSED WHEN RELAY IS DE-ENERGIZED, OPEN WHEN ENERGIZED, AND CLOSED WHEN IN ALARM. VERIFY OPERATION OF RELAY PROVIDED AND ADJUST CONNECTION OF RMOR AUXILIARY RELAYS.

LEGEND

- △ DEVICE OR FIELD TERMINAL LOCATED AT MOTOR
- ✳ DEVICE OR FIELD TERMINAL LOCATED REMOTE
- □ DEVICE OR FIELD TERMINAL LOCATED AT MCC/POWER PANEL
- ■ FIELD TERMINAL LOCATED AT CONTROL PANEL
- ▲ REMOTE TERMINAL
- ● DEVICE TERMINAL NO.
- ◆ PLC INTERFACE TERMINAL

NO.	DATE	REVISION	APP.

HATCH
750 TOWN & COUNTRY BLVD
SUITE 650
HOUSTON, TX 77024
P: 832-930-7670
TX FIRM NUMBER: F-314

SURVEYED BY:
AMANI ENGINEERING, INC.
FB NO. P-6357

STATE OF TEXAS
GUY N SEVERN
105809
LICENSED PROFESSIONAL ENGINEER
7/21/2026

CITY OF HOUSTON

HOUSTON PUBLIC WORKS

LIFT STATION RENEWAL & REPLACEMENT PROJECT

N.E. SLUDGE TRANSFER LS

CONTROL CABINET CONTROL WIRING DIAGRAM-IV

WBS NUMBER	FOR CITY OF HOUSTON USE ONLY
R-000267-0173-4	HOUSTON PUBLIC WORKS ACCEPTED AND FILED 82825 CITY DRAWING NUMBER Approval Date 08/14/26 HOUSTON TX
DRAWING SCALE	
AS NOTED	
CITY OF HOUSTON PM	
NUPUR KRISHNAN P.E. N.K.	
SHEET NO. 203 OF 274	

F1E93

PLOTTED: 8/11/2026 11:21 AM

PLOT STYLE: COH.ctb

FILE PATH: \\wuspplot01\d$\Global ProjectWise Plotting - WUS\Queue 3\queue3.dwg

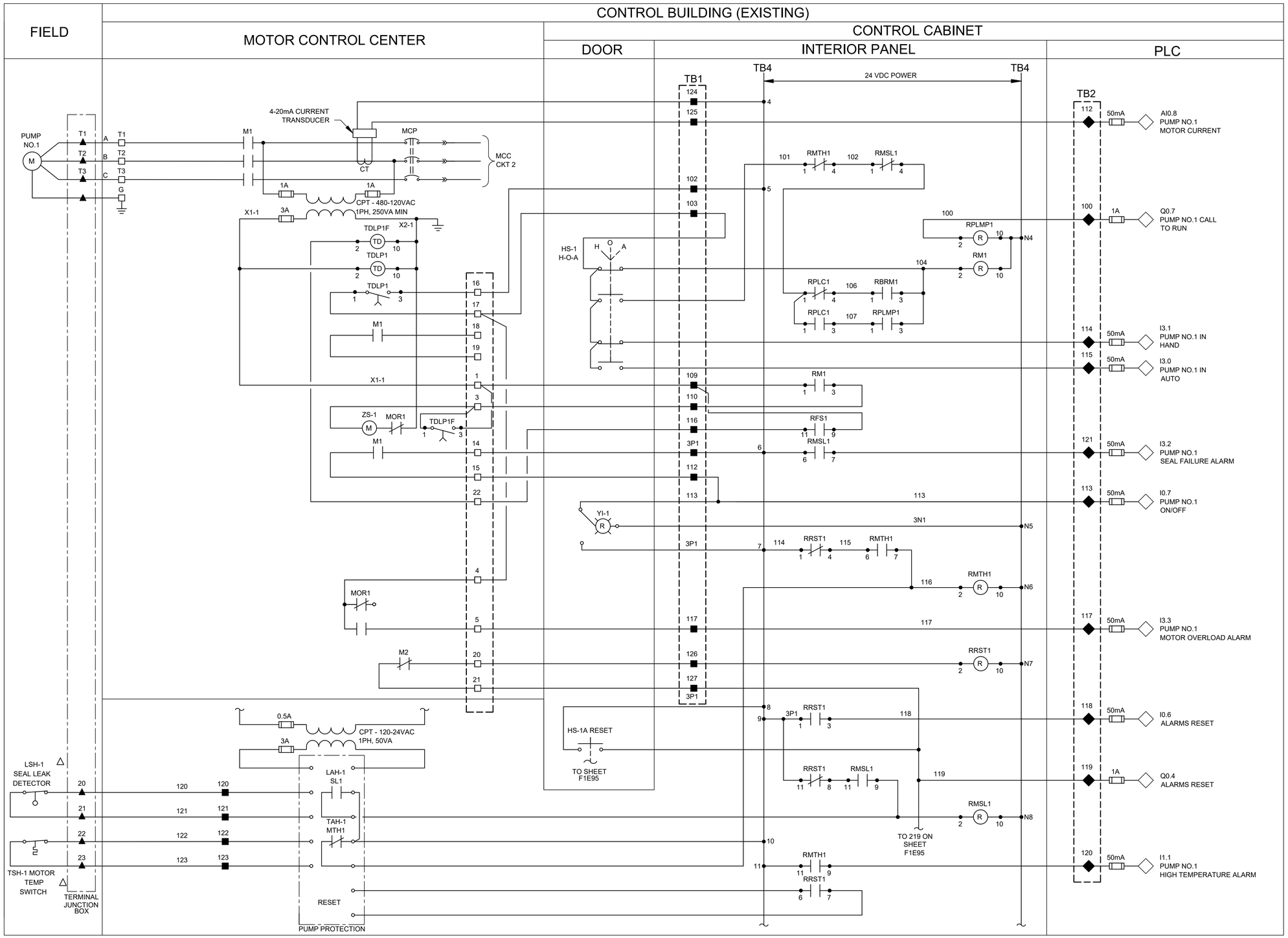

NOTES:

1. ALL FLOAT CONTROL CIRCUIT WIRES COLOR SHALL BE YELLOW.

LEGEND

- △ DEVICE OR FIELD TERMINAL LOCATED AT MOTOR
- ✳ DEVICE OR FIELD TERMINAL LOCATED REMOTE
- □ DEVICE OR FIELD TERMINAL LOCATED AT MCC/POWER PANEL
- ■ FIELD TERMINAL LOCATED AT CONTROL PANEL
- ▲ REMOTE TERMINAL
- ● DEVICE TERMINAL NO.
- ◆ PLC INTERFACE TERMINAL

NO.	DATE	REVISION	APP.

HATCH
750 TOWN & COUNTRY BLVD
SUITE 650
HOUSTON, TX 77024
P: 832-930-7670
TX FIRM NUMBER: F-314

SURVEYED BY:
AMANI ENGINEERING, INC.
FB NO. P-6357

STATE OF TEXAS
GUY N SEVERN
105809
LICENSED PROFESSIONAL ENGINEER
7/21/2026

CITY OF HOUSTON
HOUSTON PUBLIC WORKS

LIFT STATION RENEWAL & REPLACEMENT PROJECT
N.E. SLUDGE TRANSFER LS

PUMP NO.1 CONTROL WIRING DIAGRAM

WBS NUMBER	FOR CITY OF HOUSTON USE ONLY
R-000267-0173-4	HOUSTON PUBLIC WORKS ACCEPTED AND FILED 82825 CITY DRAWING NUMBER Approval Date 08/14/26 HOUSTON TX
DRAWING SCALE	
AS NOTED	
CITY OF HOUSTON PM	
NUPUR KRISHNAN P.E. N.K.	
SHEET NO. 204 OF 274	

F1E94

PLOTTED: 8/11/2026 11:16 AM
PLOT STYLE: COH.ctb
FILE PATH: \\wusppplot01\d$\Global ProjectWise Plotting - WUS\Queue 1\queue1.dwg

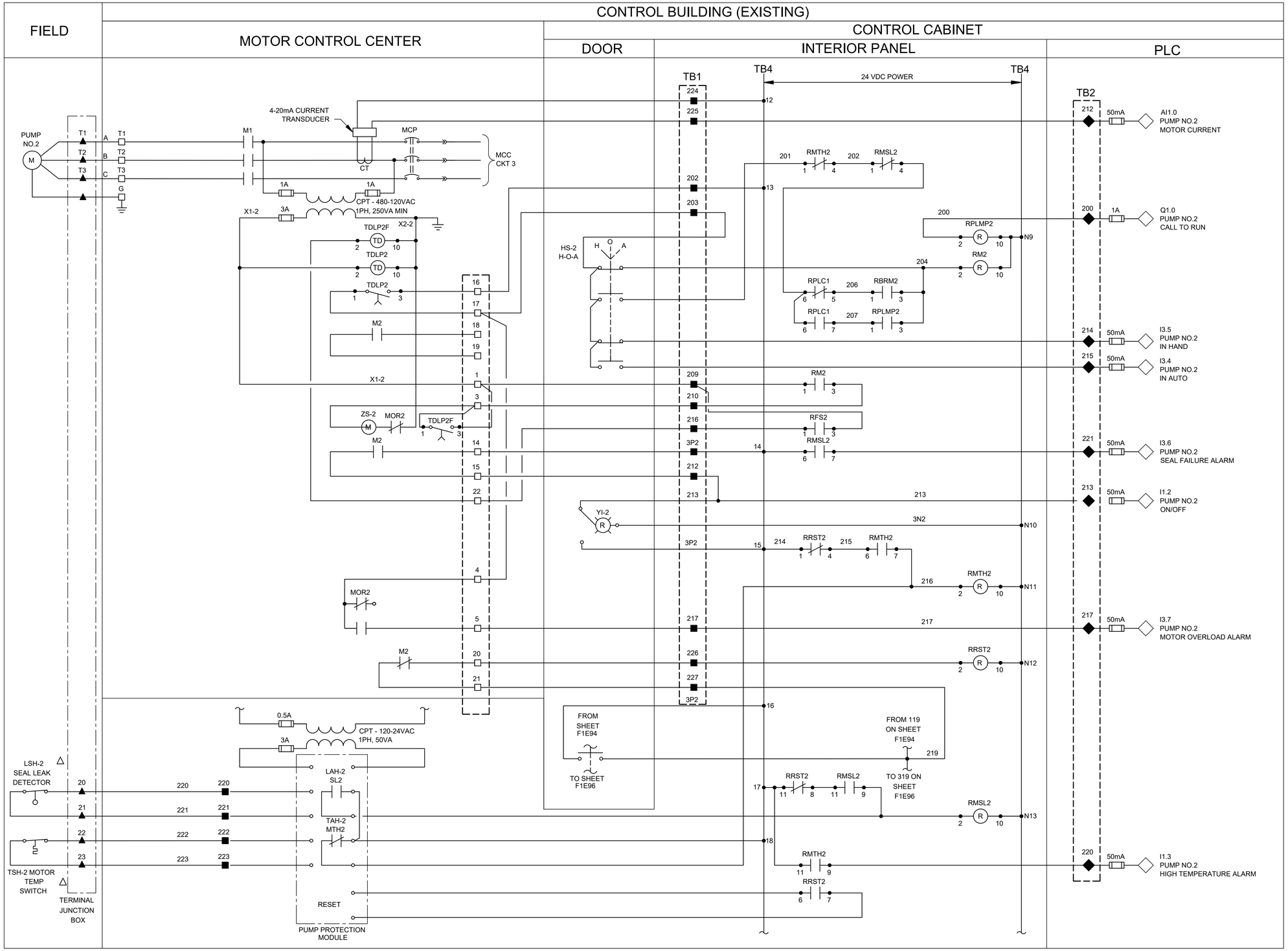

NOTES:

1. ALL FLOAT CONTROL CIRCUIT WIRES COLOR SHALL BE YELLOW.

LEGEND

- △ DEVICE OR FIELD TERMINAL LOCATED AT MOTOR
- ✳ DEVICE OR FIELD TERMINAL LOCATED REMOTE
- □ DEVICE OR FIELD TERMINAL LOCATED AT MCC/POWER PANEL
- ■ FIELD TERMINAL LOCATED AT CONTROL PANEL
- ▲ REMOTE TERMINAL
- ● DEVICE TERMINAL NO.
- ◆ PLC INTERFACE TERMINAL

HATCH
750 TOWN & COUNTRY BLVD
SUITE 650
HOUSTON, TX 77024
P: 832-930-7670
TX FIRM NUMBER: F-314

SURVEYED BY:
AMANI ENGINEERING, INC.
FB NO. P-6357

STATE OF TEXAS
GUY N SEVERN
105809
LICENSED PROFESSIONAL ENGINEER
7/21/2026

CITY OF HOUSTON
HOUSTON PUBLIC WORKS

LIFT STATION RENEWAL & REPLACEMENT PROJECT
N.E. SLUDGE TRANSFER LS

PUMP NO.2 CONTROL WIRING DIAGRAM

WBS NUMBER	FOR CITY OF HOUSTON USE ONLY
R-000267-0173-4	HOUSTON PUBLIC WORKS ACCEPTED AND FILED 82825 CITY DRAWING NUMBER Approval Date 08/14/26 HOUSTON TX
DRAWING SCALE	
AS NOTED	
CITY OF HOUSTON PM	
NUPUR KRISHNAN P.E. N.K.	
SHEET NO. 205 OF 274	

F1E95

NO.	DATE	REVISION	APP.

PLOTTED: 8/11/2026 11:16 AM
PLOT STYLE: COH.ctb
FILE PATH: \\wusppplot01\d$\Global ProjectWise Plotting - WUS\Queue 2\queue2.dwg

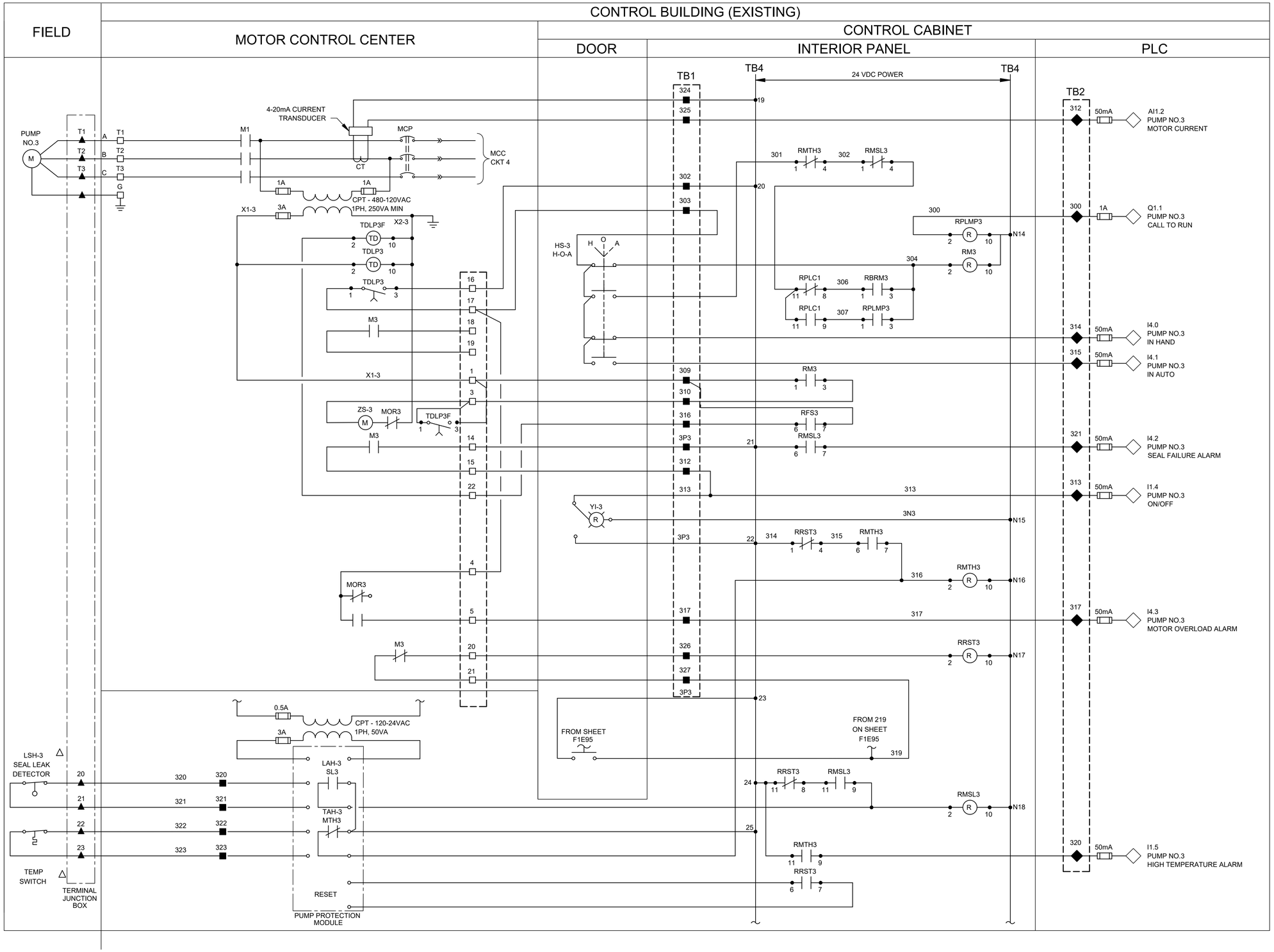

NOTES:

1. ALL FLOAT CONTROL CIRCUIT WIRES COLOR SHALL BE YELLOW.

LEGEND

- △ DEVICE OR FIELD TERMINAL LOCATED AT MOTOR
- ✳ DEVICE OR FIELD TERMINAL LOCATED REMOTE
- □ DEVICE OR FIELD TERMINAL LOCATED AT MCC/POWER PANEL
- ■ FIELD TERMINAL LOCATED AT CONTROL PANEL
- ▲ REMOTE TERMINAL
- ● DEVICE TERMINAL NO.
- ◆ PLC INTERFACE TERMINAL

HATCH
750 TOWN & COUNTRY BLVD
SUITE 650
HOUSTON, TX 77024
P: 832-930-7670
TX FIRM NUMBER: F-314

SURVEYED BY:
AMANI ENGINEERING, INC.
FB NO. P-6357

STATE OF TEXAS
GUY N SEVERN
105809
LICENSED PROFESSIONAL ENGINEER
7/21/2026

CITY OF HOUSTON
HOUSTON PUBLIC WORKS

LIFT STATION RENEWAL & REPLACEMENT PROJECT
N.E. SLUDGE TRANSFER LS

PUMP NO.3
CONTROL WIRING DIAGRAM

WBS NUMBER	FOR CITY OF HOUSTON USE ONLY
R-000267-0173-4	HOUSTON PUBLIC WORKS ACCEPTED AND FILED 82825 CITY DRAWING NUMBER Approval Date 08/14/26 HOUSTON TX
DRAWING SCALE	
AS NOTED	
CITY OF HOUSTON PM	
NUPUR KRISHNAN P.E. N.K.	
SHEET NO. 206 OF 274	

F1E96

NO.	DATE	REVISION	APP.

PLOTTED: 8/11/2026 11:15 AM
PLOT STYLE: COH.ctb
FILE PATH: \\wusppplot01\d$\Global ProjectWise Plotting - WUS\Queue 5\queue5.dwg

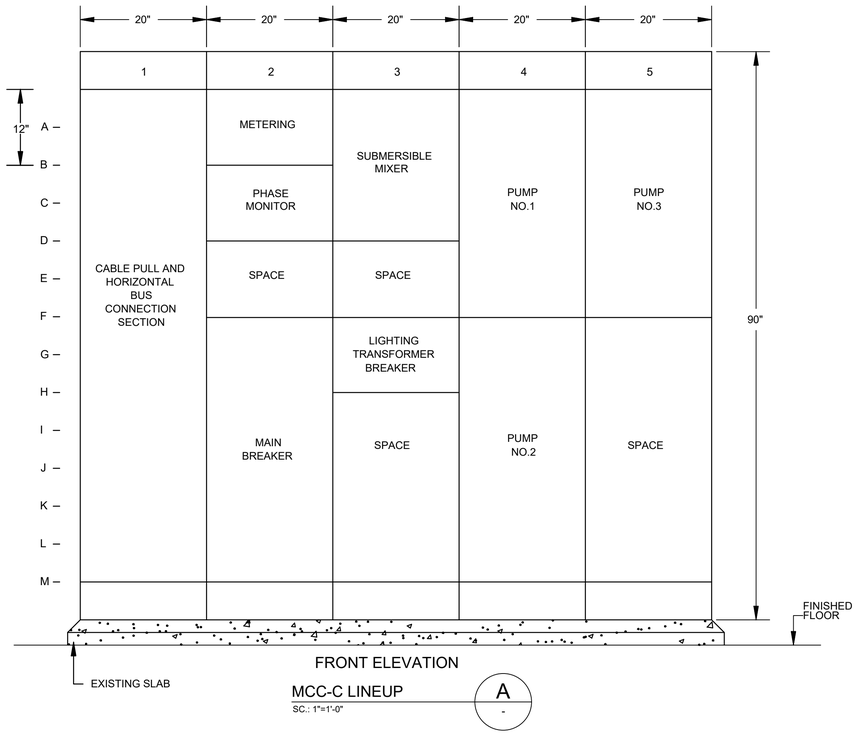

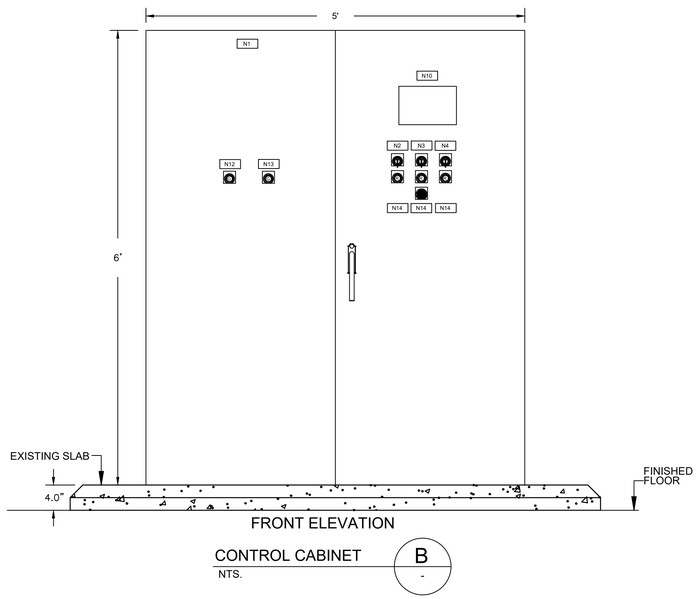

NO.	DATE	REVISION	APP.

HATCH
750 TOWN & COUNTRY BLVD
SUITE 650
HOUSTON, TX 77024
P: 832-930-7670
TX FIRM NUMBER: F-314

SURVEYED BY:
AMANI ENGINEERING, INC.
FB NO. P-6357

STATE OF TEXAS
GUY N SEVERN
105809
LICENSED
PROFESSIONAL ENGINEER
7/21/2026

CITY OF HOUSTON
HOUSTON PUBLIC WORKS

LIFT STATION RENEWAL & REPLACEMENT PROJECT
N.E. SLUDGE TRANSFER LS

MCC – POWER & CONTROL CABINET ELEVATION

WBS NUMBER
R-000267-0173-4
DRAWING SCALE
AS NOTED
CITY OF HOUSTON PM
NUPUR KRISHNAN P.E. N.K.
SHEET NO. 207 OF 274

FOR CITY OF HOUSTON USE ONLY

HOUSTON PUBLIC WORKS
ACCEPTED AND FILED
82825
CITY DRAWING NUMBER
Approval Date 08/14/26
HOUSTON TX

F1E97

PLOTTED: 8/11/2026 11:18 AM
PLOT STYLE: COH.ctb
FILE PATH: \\wusppplot01\d$\Global ProjectWise Plotting - WUS\Queue 3\queue3.dwg

	DESCRIPTION	SERVICE		ROUTING			CONDUIT & WIRE SIZE
		VOLTAGE	AMPS OR HP	FROM	TO	VIA	
100A	SERVICE POWER (PHASE# 1)	480V	400A	SWITCHBOARD (EXISTING)	MAIN BREAKER IN MCC-C	RIGID CONDUIT	1#350 kCMIL, 2"C
100B	SERVICE POWER (PHASE# 2)	480V	400A	SWITCHBOARD (EXISTING)	MAIN BREAKER IN MCC-C	RIGID CONDUIT	1#350 kCMIL, 2"C
100C	SERVICE POWER (PHASE# 3)	480V	400A	SWITCHBOARD (EXISTING)	MAIN BREAKER IN MCC-C	RIGID CONDUIT	1#350 kCMIL, 2"C
100D	SERVICE POWER (GROUND)	480V	400A	SWITCHBOARD (EXISTING)	GROUNDING IN MCC-C	RIGID CONDUIT	1#350 kCMIL, 2"C
101	GROUND ELECTRODE CONDUCTOR	--	--	MCC-C	GROUND FIELD	--	1#6G
104	GROUND ELECTRODE CONDUCTOR	--	--	CONTROL CABINET	GROUND FIELD	--	1#6G
105	POLE LIGHT	120V	--	POLE LIGHT SWITCH	LIGHT POLE	RIGID CONDUIT/DUCT BANK	2#12 / 1#12G (POLE LIGHT SWITCH), 1/2"C / 2"C.
200	PUMP NO. 1 POWER	480V	70 HP	PUMP NO. 1	PUMP NO. 1 JUNCTION BOX	RIGID CONDUIT	MFR CABLE, 2-1/2"C (SEE NOTE 2)
201	PUMP NO. 1 CONTROLS	120V	--	PUMP NO. 1	PUMP NO. 1 JUNCTION BOX	RIGID CONDUIT	INCL IN MFR CABLE, 2-1/2"C (SEE NOTE 2)
202	PUMP NO. 1 POWER	480V	70 HP	PUMP NO. 1 JUNCTION BOX	PUMP STARTER (MCC-C)	RIGID CONDUIT/DUCT BANK	3#1/0 / 1#4G, 1"C / 2"C
203	COMBINED PUMP CONTROLS	120V	--	PUMP NO. 1 JUNCTION BOX	PUMP STARTER (CONTROL CABINET)	RIGID CONDUIT/DUCT BANK	(COMBINE 201 & 301) 8#14, 1"C / 2"C
205	PUMP NO. 1 CONTROLS	120V	--	STARTER IN MOTOR CONTROL CENTER	CONTROL CABINET	RIGID CONDUIT	10C#14 / 1P+S#16 AWG, 1"C
300	PUMP NO. 2 POWER	480V	70 HP	PUMP NO. 2	PUMP NO. 2 JUNCTION BOX	RIGID CONDUIT	MFR CABLE, 2-1/2"C (SEE NOTE 2)
301	PUMP NO. 2 CONTROLS	120V	--	PUMP NO. 2	PUMP NO. 2 JUNCTION BOX	RIGID CONDUIT	INCL IN MFR CABLE, 2-1/2"C (SEE NOTE 2)
302	PUMP NO. 2 POWER	480V	70 HP	PUMP NO. 2 JUNCTION BOX	PUMP STARTER (MCC-C)	RIGID CONDUIT/DUCT BANK	3#1/0 / 1#4G, 1"C / 2"C
305	PUMP NO. 2 CONTROLS	120V	--	STARTER IN MOTOR CONTROL CENTER	CONTROL CABINET	RIGID CONDUIT	10C#14 / 1P+S#16 AWG, 1"C
400	PUMP NO. 3 POWER	480V	70 HP	PUMP NO. 3	PUMP NO. 3 JUNCTION BOX	RIGID CONDUIT	MFR CABLE, 2-1/2"C (SEE NOTE 2)
401	PUMP NO. 3 CONTROLS	120V	--	PUMP NO. 3	PUMP NO. 3 JUNCTION BOX	RIGID CONDUIT	INCL MFR CABLE, 2-1/2"C (SEE NOTE 2)
402	PUMP NO. 3 POWER	480V	70 HP	PUMP NO. 3 JUNCTION BOX	PUMP STARTER (MCC-C)	RIGID CONDUIT/DUCT BANK	3#1/0 / 1#4G, 1"C / 2"C
405	PUMP NO. 3 CONTROLS	120V	--	STARTER IN MOTOR CONTROL CENTER	CONTROL CABINET	RIGID CONDUIT	10C#14 / 1P+S#16 AWG, 1"C
403	PUMP NO. 3 CONTROLS	120V	70 HP	PUMP NO. 3 JUNCTION BOX	CONTROL PANEL (CONTROL CABINET)	RIGID CONDUIT/DUCT BANK	4#14, 1"C / 2"C
600	LIGHTING PANEL FEEDER	480V	--	MCC-C	LIGHTING TRANSFORMER	RIGID CONDUIT	3#10AWG / 1#10AWG G, 1"C
601	LIGHTING PANEL GROUND	--	--	LIGHTING PANEL	GROUND FIELD	--	1#6G
602	LIGHTING PANEL FEEDER	120/240V	--	LIGHTING TRANSFORMER	LIGHTING PANEL	RIGID CONDUIT	3#10AWG / 1#10AWG G, 1"C
1000	LEVEL TRANSMITTER LT-1	24VDC	--	LEVEL TRANSMITTER LT-1	TRANSMITTER JUNCTION BOX	RIGID CONDUIT	INCL IN MFR CABLE, 2-1/2"C (SEE NOTE 2)
1001	LEVEL TRANSMITTER LT-2	24VDC	--	LEVEL TRANSMITTER LT-2	TRANSMITTER JUNCTION BOX	RIGID CONDUIT	INCL IN MFR CABLE, 2-1/2"C (SEE NOTE 2)
1002	COMBINED LEVEL TRANSMITTERS & FLOAT SWITCH	24VDC	--	TRANSMITTER JUNCTION BOX	CONTROL CABINET	RIGID CONDUIT/DUCT BANK	COMBINE 1000/1001/1003, 4#14+2#14G / 4#14, 2"C
1003	WELL FLOAT SWITCHES	24VDC	--	TRANSMITTER JUNCTION BOX	FLOAT SWITCH NO.1 & NO.2	RIGID CONDUIT	MFR CABLE, 2-1/2" CONDUIT (SEE NOTE 2)
1100	120VAC FOR RECEPTACLE (OUTSIDE)	120V	--	LIGHTING PANEL	RECEPTACLE (OUTSIDE)	RIGID CONDUIT/DUCT BANK	L5 2#12 #12G, 1/2"C / 2"C
1101	120VAC CONTROL CABINET	120V	--	LIGHTING PANEL	CONTROL CABINET	RIGID CONDUIT	L1 , 2#12 #12G, POWER SOURCE (TBAC) 3/4"C L2 , 2#12 #12G, CABINET RECEPTACLE L3 , 2#12 #12G, CABINET LIGHT
1102	PPU-AC PANEL 120VAC	120V	--	LIGHTING PANEL	PPU-AC PANEL	RIGID CONDUIT	L4 , 2#12 #12G, 1/2"C
1201	24VDC CONTROL CABINET	24VDC	--	PPU-AC PANEL	CONTROL CABINET	RIGID CONDUIT	ETHERNET CABLE CAT-5E, 1/2"C 24VDC SUPPLY (TBPPU)
1202	SUMMERSIBLE MIXER POWER	480V	15 HP	SUMMERSIBLE MIXER	STARTER (MCC-C)	RIGID CONDUIT/DUCT BANK	3#10 1#10G, 1/2"C / 2"C
1203	SUMMERSIBLE MIXER CONTROL	24VDC	--	SUMMERSIBLE MIXER	CONTROL CABINET	RIGID CONDUIT	10C#14 / 1P+S#16 AWG, 1"C

NOTES:

1. CONDUITS LABELED "FUTURE SPACE" ARE TO BE INSTALLED AND CAPPED IN FIELD.
2. ANY CONDUIT REQUIRING A CSBE SEAL, SHALL BE A MINIMUM SIZE OF 2 1/2".
3. ALL UNDERGROUND CONDUITS (SINGLE AND MULTI-RUN) SHALL BE MINIMUM 2 INCHES AND SHALL BE ENCASED IN REINFORCED CONCRETE DUCTBANK.

NO.	DATE	REVISION	APP.

HATCH
750 TOWN & COUNTRY BLVD
SUITE 650
HOUSTON, TX 77024
P: 832-930-7670
TX FIRM NUMBER: F-314

SURVEYED BY:
AMANI ENGINEERING, INC.
FB NO. P-6357

STATE OF TEXAS
GUY N SEVERN
105809
LICENSED
PROFESSIONAL ENGINEER
7/21/2026

CITY OF HOUSTON
HOUSTON PUBLIC WORKS

LIFT STATION RENEWAL & REPLACEMENT PROJECT
N.E. SLUDGE TRANSFER LS

ELECTRICAL CONDUIT SCHEDULE

WBS NUMBER
R-000267-0173-4
DRAWING SCALE
AS NOTED
CITY OF HOUSTON PM
NUPUR KRISHNAN P.E. N.K.

FOR CITY OF HOUSTON USE ONLY

HOUSTON PUBLIC WORKS
ACCEPTED AND FILED
82825
CITY DRAWING NUMBER
Approval Date 08/14/26
HOUSTON TX

F1E98

PLOTTED: 8/25/2026 1:01 PM
PLOT STYLE: COH.ctb
FILE PATH: \\wuspplot01\d$\Global ProjectWise Plotting - WUS\Queue 1\queue1.dwg

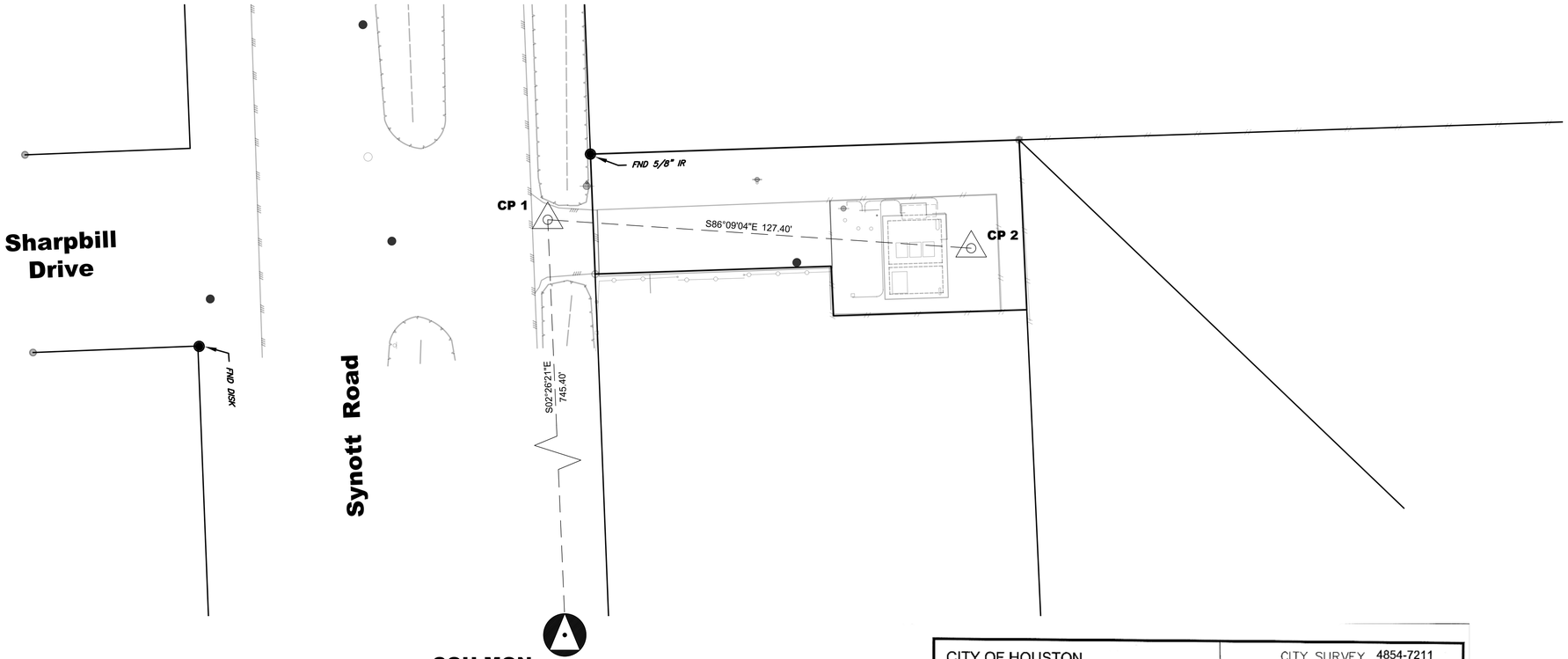

N

20 10 0 20

SCALE IN FEET
22 X 34 : 1" = 20'

NO.	DATE	REVISION	APP.

SURVEY NOTES:

1. ALL BEARINGS AND COORDINATES ARE BASED ON THE TEXAS COORDINATE SYSTEM, SOUTH CENTRAL ZONE (4204) NORTH AMERICAN DATUM OF 1983 (2011 ADJ) 2010 EPOCH, U.S. SURVEY FEET. COORDINATES SHOWN HEREON ARE GRID VALUES AND ALL DISTANCES SHOWN ARE SURFACE VALUES. THE COMBINED SCALE FACTOR IS 0.99988335.
2. GRID COORDINATES/SCALE FACTOR = SURFACE COORDINATES.
3. FIELD DATA COLLECTED NOVEMBER 2024.
4. ALL ELEVATIONS SHOWN HEREON ARE REFERENCED TO THE NORTH AMERICAN VERTICAL DATUM OF 1988 (NAVD88) GEOID 18. ALL CONTROL NETWORK ELEVATIONS ARE TIED TO CITY SURVEY 4854-7211 SITE CONTROL MONUMENT USING DIFFERENTIAL LEVELING.
5. THE CONVERSION FACTOR FROM PROJECT LEVELED ELEVATION TO THE HCFCD CALLED G99 ELEVATION = +0.33'.
6. ACCORDING TO FEMA'S FLOOD INSURANCE RATE MAP (FIRM) PANEL NO. 48201C0830L. DATED 06/18/2007, THE SUBJECT PROPERTY LIES WITHIN ZONE X, AREA OF 0.2% ANNUAL CHANCE OF FLOOD. APPROXIMATE LIMITS (IF SHOWN) ARE BASED ON AVAILABLE SHAPE FILES PROVIDED BY FEMA. THIS FLOOD STATEMENT IS BASED ON ENGINEERING INFORMATION PROVIDED BY FEMA AND SHALL NOT CREATE LIABILITY ON THE PART OF THE SURVEYOR.

PROJECT BENCH MARK:

A BRASS DISK LOCATED ON THE EAST SIDE OF SYNOTT RD. APPROXIMATELY 250 FEET SOUTH OF CARVEL LN. INTERSECTION.
OBSERVED ELEVATION = 83.46' (NAVD 88 GEOID 18)
CALLED ELEVATION = 83.79' (GEOID 99)

CP 1 -- MAG NAIL

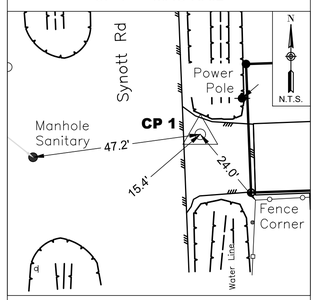

GRID NORTHING : 13,816,940.35
GRID EASTING : 3,043,133.87

CP 2 -- X-CUT

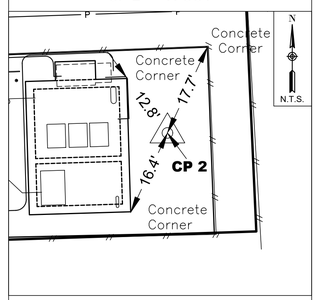

GRID NORTHING : 13,816,931.80
GRID EASTING : 3,043,260.97

CP No.	Grid Northing	Grid Easting	Elevation	Description
1	13,816,940.35	3,043,133.87	80.66	MAG NAIL
2	13,816,931.80	3,043,260.97	80.67	X-CUT

CITY OF HOUSTON

CITY SURVEY 4854-7211
SITE CONTROL MONUMENT
FLOODPLAIN RM#040585

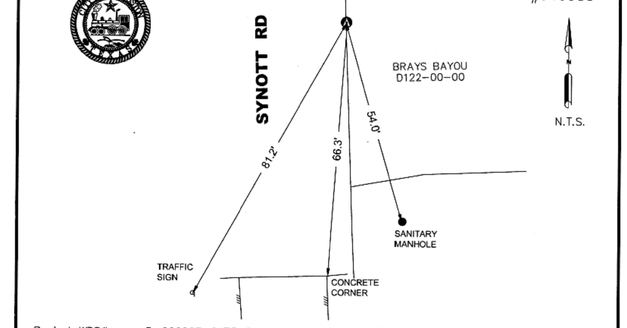

Project WBS# R-000267-0175-3
Texas Coordinate System of 1983, South Central Zone, U. S. Survey Feet
X= 3,043,165.59
Y= 13,816,195.72

Lat.= N 29° 41' 45.9121"
Lon.= W 95° 36' 52.2829"

Keymap Page: 528L
Orthometric Elevation = 83.46
Ellipsoid Height= -6.38
Geoid: GEOID 18
Datum Source & Adjustment: 2-HR STATIC GPS OBSERVATION MADE ON MONUMENT ON 10/25/2024

Reference Frame Used: NAD_83(2011)(EPOCH: 2010.0000)
Vertical Adjustment used: NAVD 88 GEOID18
General Location: ON THE EAST SIDE OF SYNOTT RD, APPROXIMATELY 250 FEET SOUTH OF CARVEL LN INTERSECTION.

Date Set: MAY 14, 2003 Type of Mark: BRASS DISK

3 Nearest project control points (bearings and distances stated below):
1. CP #1, MAG NAIL, N 2° 26' 21" W, 745.40'
2. CP #2, X-CUT , N 7° 23' 00" E, 742.33'
3. CP #3, 60D NAIL , N 15° 29' 45" W, 761.68'

NOTE:
1. Bearings are grid bearings.
2. Combined Factor (C.F)= 0.99988335.

Surface= Grid
C.F.

Surveyed By: Amani Engineering, Inc.
11011 Richmond Avenue, Suite 700
Houston, TX 77042
Tel. (713)270-5700
Texas Registered Survey Firm 10028200

STATE OF TEXAS REGISTERED CHRISTINA I. WEAVER 6753 PROFESSIONAL LAND SURVEYOR

5.2.25

\\AEFILS01\Data\Cadd\2024\24013 - Hatch - COH FY20 Lift Stations\Monument\Synott Road #1 LS\4854-7211.dwg

AMANI ENGINEERING, INC.
11011 RICHMOND AVENUE
SUITE 700
HOUSTON, TEXAS 77024
TEL: (713) 270-5700
TBPE REG. NO. F-4528
TBPELS REG. NO. 1028200

HATCH
750 TOWN & COUNTRY BLVD.
SUITE 650
HOUSTON, TEXAS 77024
P:832-930-7670
TX FIRM NUMBER: F-314

SURVEYED BY:
AMANI ENGINEERING,INC.
FB NO. P-6357

STATE OF TEXAS REGISTERED WILLIAM H. REIMER III 4044 PROFESSIONAL LAND SURVEYOR
06-05-2026

CITY OF HOUSTON
HOUSTON PUBLIC WORKS

LIFT STATION RENEWAL & REPLACEMENT PROJECT

SYNOTT RD #1 LIFT STATION SURVEY CONTROL MAP

WBS NUMBER
R-000267-0173-4
DRAWING SCALE
1" = 20'
CITY OF HOUSTON PM
NUPUR KRISHNAN P.E.
SHEET NO. 209 OF 274

FOR CITY OF HOUSTON USE ONLY

HOUSTON PUBLIC WORKS
ACCEPTED AND FILED
82825
CITY DRAWING NUMBER
Approval Date 08/14/26
HOUSTON TX

F1C35

FILE PATH: P:\Cadd\2024\24013 - Hatch - COH FY20 Lift Stations\CAD_DWG\Survey Control Drawings\Control-Synott Road #1 LS..dwg

0 1 2 3 ORIGINAL SCALE IN INCHES FOR REDUCED PLANS

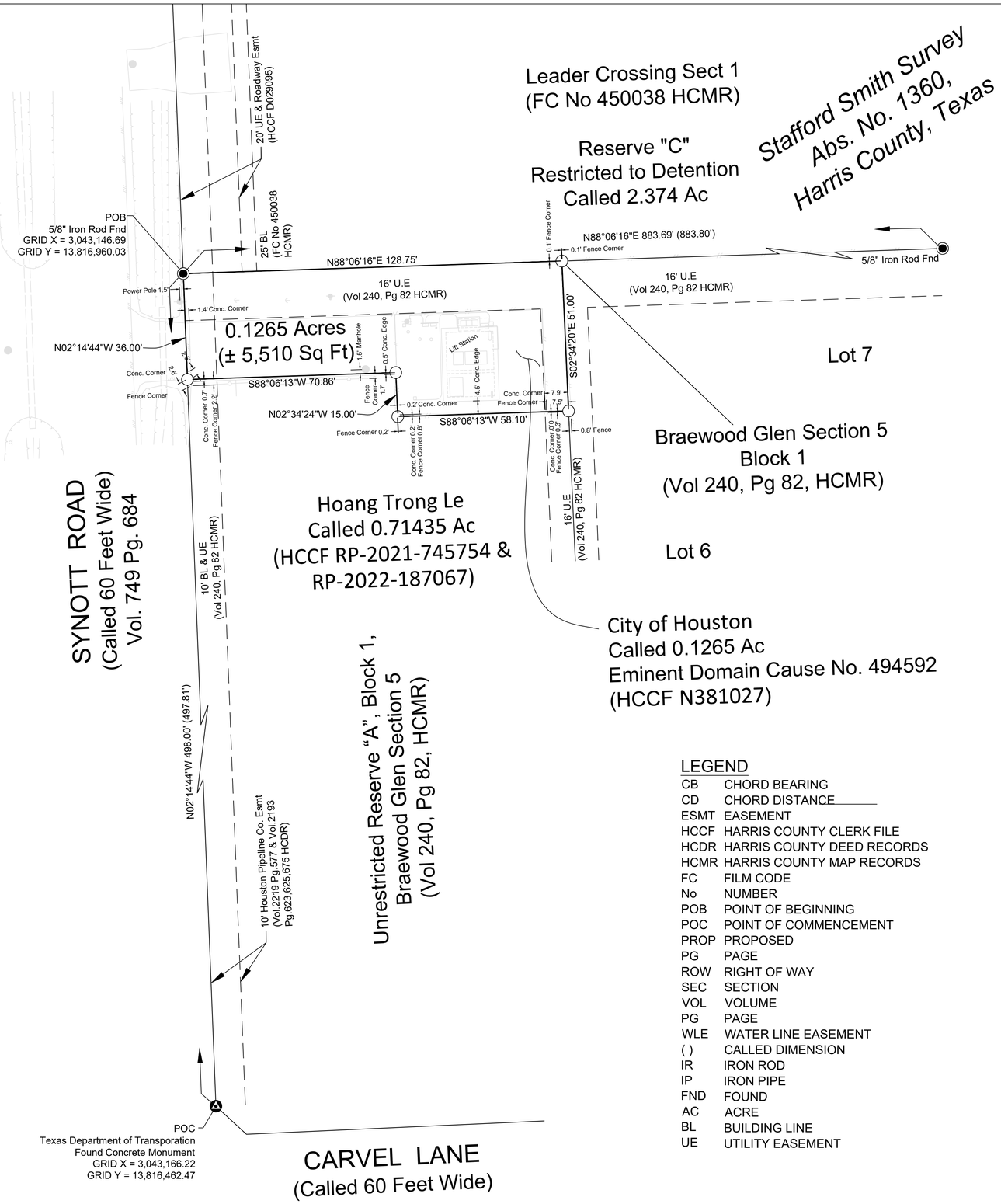

SYMBOL LEGEND	
◉	FOUND IRON ROD
⊙	FOUND IRON PIPE
⊗	SET 'X' CUT
○	SET 5/8" IRON ROD CAPPED 'AMANI'
⏃	FOUND TXDOT CONCRETE MOUMENT

N

20 10 0 20

1" = 20' (22"x34")
1" = 40' (11"x17")

A Boundary Survey of 0.1265 Acres, situated in the Stafford Smith Survey, Abstract No. 1360, Harris County Texas, being all of that certain 0.1265 Acres described in Eminent Domain Cause No. 494592 to the City of Houston as recorded in HCCF N381027, being out of called 1.514 Acre Unrestricted Reserve "A", Block 1, Braewood Glen Section 5, as recorded in Vol 240, Pg 82, HCMR of Harris County, Texas.

NOTES:

1. ALL BEARINGS AND COORDINATES ARE BASED ON THE TEXAS COORDINATE SYSTEM, SOUTH CENTRAL ZONE (4204) NORTH AMERICAN DATUM OF 1983 (2011 ADJ) 2010 EPOCH. COORDINATES SHOWN HEREON ARE GRID VALUES AND ALL DISTANCES SHOWN ARE SURFACE VALUES.THE COMBINED SCALE FACTOR IS 0.99988335.
2. GRID COORDINATES/SCALE FACTOR = SURFACE COORDINATES.
3. HORIZONTAL COORDINATES BASED ON GPS FIELD DATA COLLECTED 10/25/24 - 06/05/25.
4. THE SURVEYOR HAS NOT ABSTRACTED THE SUBJECT PROPERTY. AN ABSTRACTOR'S CERTIFICATE WAS PROVIDED BY ABSTRACT SERVICES OF HOUSTON, GF NO. 7910-25-1907 DATED MARCH 24, 2025.
5. SURVEY WAS PREPARED WITHOUT BENEFIT OF A CURRENT TITLE COMMITMENT AND MAY NOT SHOW ALL ENCUMBRANCES ON SITE. THE CLIENT OR TITLE COMPANY DID NOT PROVIDE A TITLE COMMITMENT TO COMPLETE THE LAND TITLE SURVEY.
6. SUBJECT TRACT MAY BE SUBJECT TO THE FOLLOWING EASEMENTS AND RESTRICTIONS :

6.A SUBJECT TO RESTRICTIVE COVENANTS AS SET FORTH IN A SUBDIVISION PLAT, RECORDED IN VOLUME 240, PAGE 82 OF THE MAP RECORDS OF HARRIS COUNTY, TEXAS AND UNDER COUNTY CLERK'S FILE NO. E892240, 20120110230 AND RP-2016-575379.

THIS SURVEY SUBSTANTIALLY COMPLIES WITH THE CURRENT TEXAS SOCIETY OF PROFESSIONAL SURVEYORS MANUAL OF PRACTICE REQUIREMENTS FOR A CATEGORY 1B, CONDITION 2 STANDARD LAND SURVEY.

THE FIELD WORK WAS COMPLETED JUNE 2025.

LEGEND

CB	CHORD BEARING
CD	CHORD DISTANCE
ESMT	EASEMENT
HCCF	HARRIS COUNTY CLERK FILE
HCDR	HARRIS COUNTY DEED RECORDS
HCMR	HARRIS COUNTY MAP RECORDS
FC	FILM CODE
No	NUMBER
POB	POINT OF BEGINNING
POC	POINT OF COMMENCEMENT
PROP	PROPOSED
PG	PAGE
ROW	RIGHT OF WAY
SEC	SECTION
VOL	VOLUME
PG	PAGE
WLE	WATER LINE EASEMENT
( )	CALLED DIMENSION
IR	IRON ROD
IP	IRON PIPE
FND	FOUND
AC	ACRE
BL	BUILDING LINE
UE	UTILITY EASEMENT

WILLIAM H. REIMER III
REGISTERED PROFESSIONAL LAND SURVEYOR NO. 4044
AMANI ENGINEERING, INC.
11011 RICHMOND AVE, SUITE 700
HOUSTON, TEXAS 77042
TEL 713.270.5700
TEXAS REGISTERED SURVEYING FIRM No. 100282-00

AMANI ENGINEERING, INC.
11011 RICHMOND AVENUE, SUITE 700
HOUSTON, TEXAS 77042
TEL: (713) 270-5700
Texas Registered Engineering Firm No. F-4528
Texas Registered Surveying Firm No.100282-00

STATE OF TEXAS
REGISTERED
WILLIAM H. REIMER III
4044
PROFESSIONAL
LAND SURVEYOR
William H. Reimer III
08-22-2025

HOUSTON
PUBLIC WORKS
ACCEPTED AND FILED
82825
CITY DRAWING NUMBER
Approval Date 08/14/26
HOUSTON TX

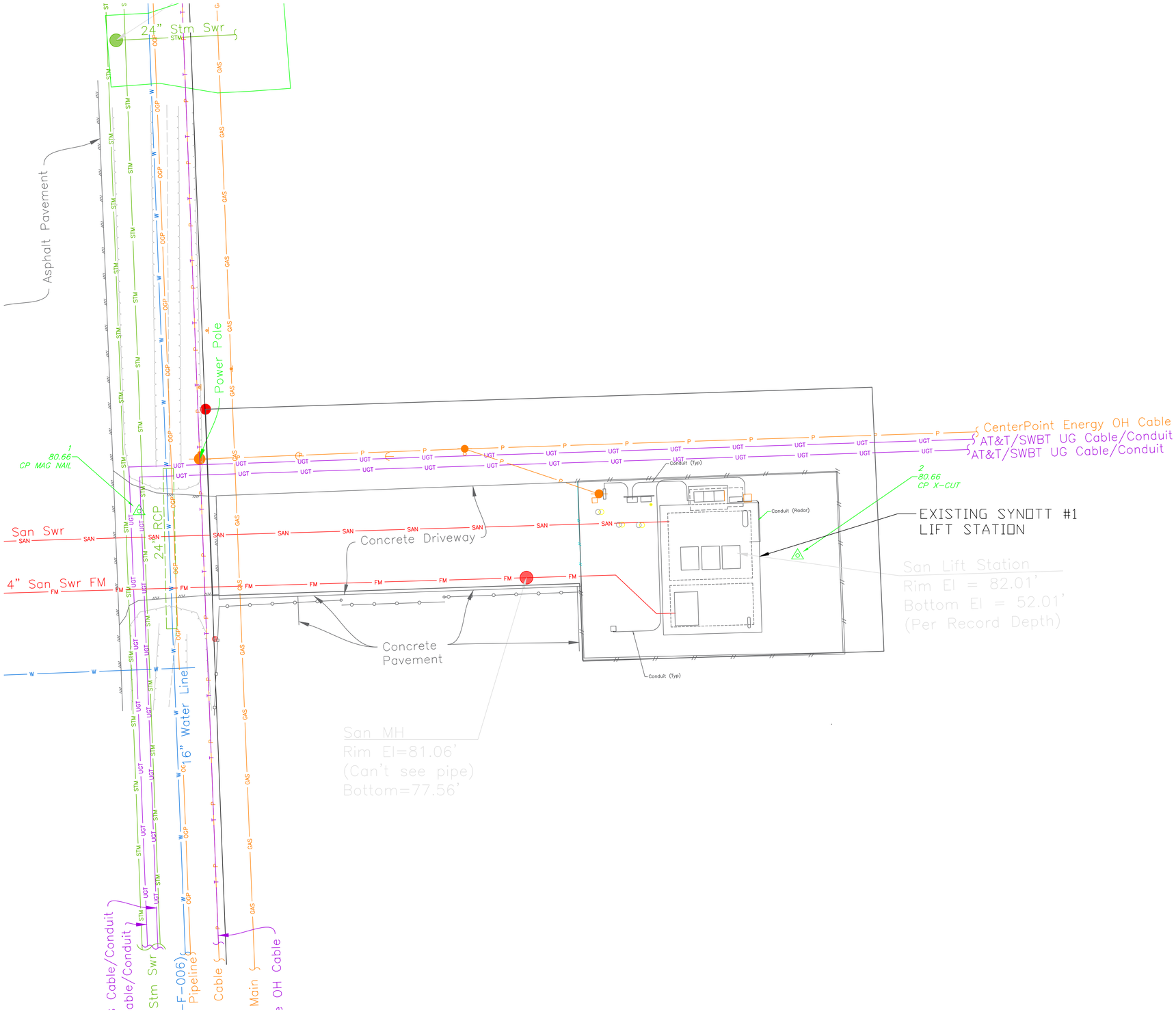

NOTE:

1. LS SITE IS NOT LOCATED IN THE 100 YEAR FLOODPLAIN, IT IS IN THE 500 YEAR FLOODPLAIN

NO.	DATE	REVISION	APP.

0 10 20 Feet

F1C37

HATCH
750 TOWN & COUNTRY BLVD
SUITE 650
HOUSTON, TX 77024
P: 832-930-7670
TX FIRM NUMBER: F-314

SURVEYED BY:
AMANI ENGINEERING, INC.
FB NO. P-6357

STATE OF TEXAS
MARK G. SCALLY
136279
LICENSED PROFESSIONAL ENGINEER
5/14/26

CITY OF HOUSTON
HOUSTON PUBLIC WORKS

LIFT STATION RENEWAL & REPLACEMENT PROJECT
SYNOTT RD #1 LS
EXISTING CIVIL TOPOGRAPHIC PLAN

WBS NUMBER
R-000267-0173-4
DRAWING SCALE
AS NOTED
CITY OF HOUSTON PM
NUPUR KRISHNAN P.E. N.K.
SHEET NO. 211 OF 274

FOR CITY OF HOUSTON USE ONLY

HOUSTON PUBLIC WORKS
ACCEPTED AND FILED
82825
CITY DRAWING NUMBER
Approval Date 08/14/26
HOUSTON TX

PLOTTED: 5/14/2026 7:24 AM
PLOT STYLE: ----
FILE PATH: \\wusppplot01\d$\Global ProjectWise Plotting - WUS\Queue 5\queue5.dwg

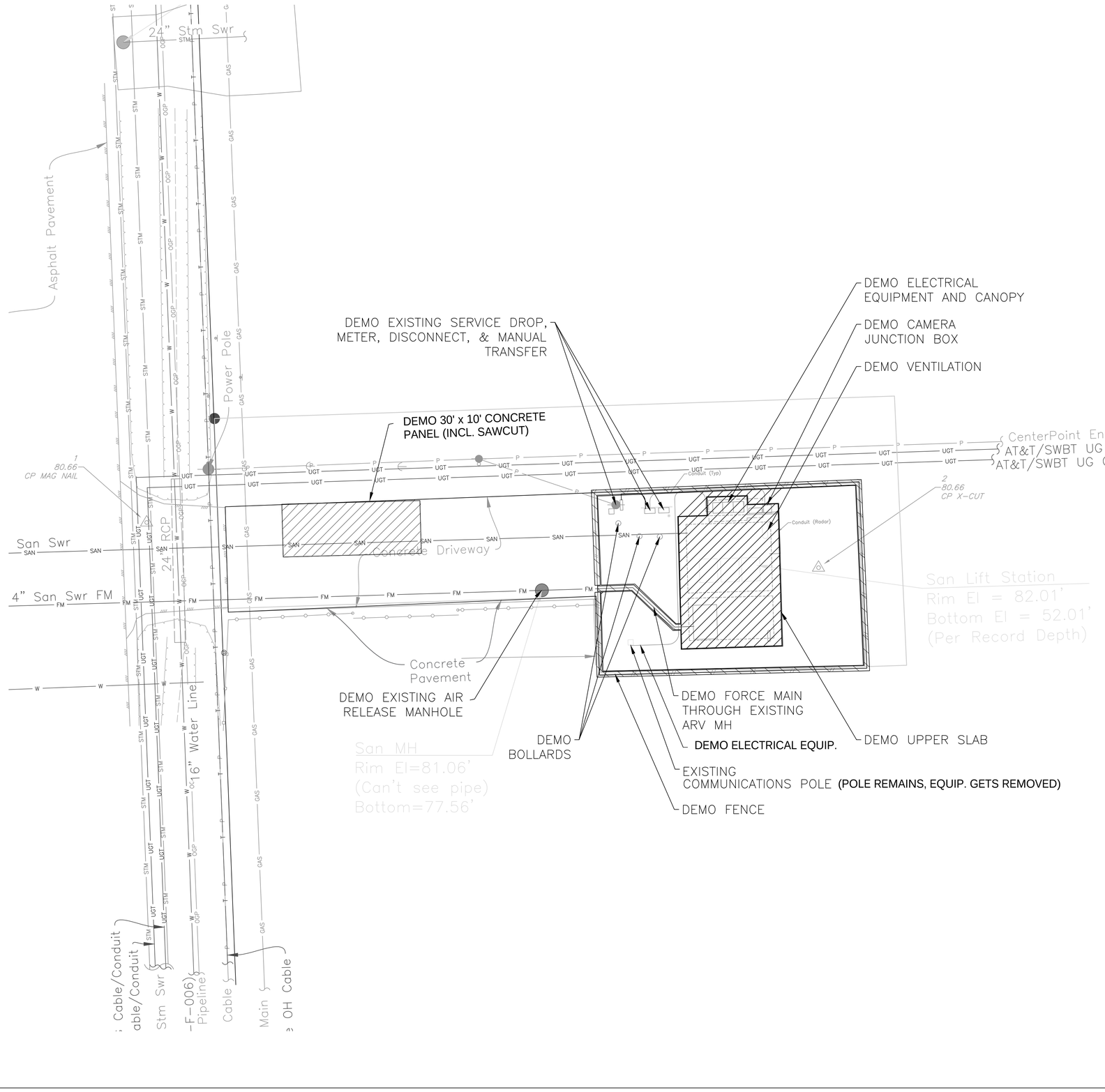

NOTE: THE CITY SHALL HAVE THE FIRST RIGHT OF REFUSAL TO RETAIN OR SALVAGE ALL ITEMS SHOWN TO BE DEMOLISHED AND/OR REMOVED, INCLUDING BUT NOT LIMITED TO PUMPS, HATCHES AND ELECTRICAL AND INSTRUMENTATION COMPONENTS. PRIOR TO INITIATING DEMOLITION WORK, THE CONTRACTOR AND THE DESIGNATED FIELD INSPECTOR SHALL MAKE A JOINT INSPECTION OF EACH SITE TO IDENTIFY ALL EQUIPMENT TO BE RETAINED BY THE CITY FOR SALVAGE OR REUSE. ITEMS IDENTIFIED FOR SALVAGE SHALL BE CAREFULLY REMOVED TO PROTECT FROM DAMAGE. ALL OTHER ITEMS SHOWN TO BE DEMOLISHED/REMOVED THAT ARE NOT RETAINED BY THE CITY SHALL BE PROPERLY REMOVED FROM THE SITE AND HANDLED PER SPECIFICATION 02220–DEMOLITION AT NO ADDITIONAL COST TO THE CITY. CONTACT DESIGNATED CITY REPRESENTATIVE (CAPITAL PROJECTS CONSTRUCTION INSPECTOR) FOR WASTEWATER TREATMENT PLANT SALVAGE AT LEAST 72 HOURS PRIOR TO DEMOLITION IN ORDER TO COORDINATE REMOVAL OF ANY ITEMS THE CITY WISHES TO CLAIM AND SALVAGE. THE CONTRACTOR SHALL DELIVER ALL SALVAGE ITEMS TO A LOCATION WITHIN THE CITY DETERMINED BY THE CITY.

NO.	DATE	REVISION	APP.

HATCH
750 TOWN & COUNTRY BLVD
SUITE 650
HOUSTON, TX 77024
P: 832-930-7670
TX FIRM NUMBER: F-314

SURVEYED BY:
AMANI ENGINEERING, INC.
FB NO. P-6357

STATE OF TEXAS
MARK G. SCALLY
136279
LICENSED PROFESSIONAL ENGINEER
3/9/26

CITY OF HOUSTON
HOUSTON PUBLIC WORKS

LIFT STATION RENEWAL & REPLACEMENT PROJECT
SYNOTT RD #1 LS
CIVIL DEMOLITION PLAN

WBS NUMBER
R-000267-0173-4
DRAWING SCALE
AS NOTED
CITY OF HOUSTON PM
NUPUR KRISHNAN P.E. N.K.
SHEET NO. 212 OF 274

FOR CITY OF HOUSTON USE ONLY

HOUSTON PUBLIC WORKS
ACCEPTED AND FILED
82825
CITY DRAWING NUMBER
Approval Date 08/14/26
HOUSTON TX

F1C54

PLOT STYLE: Grayscale.ctb
PLOTTED: 2/5/2026 1:16 PM
FILE PATH: C:\pwworking\hatch-dpd-south_central_us\dms511138\H374729-0000-220-251-0006.dwg

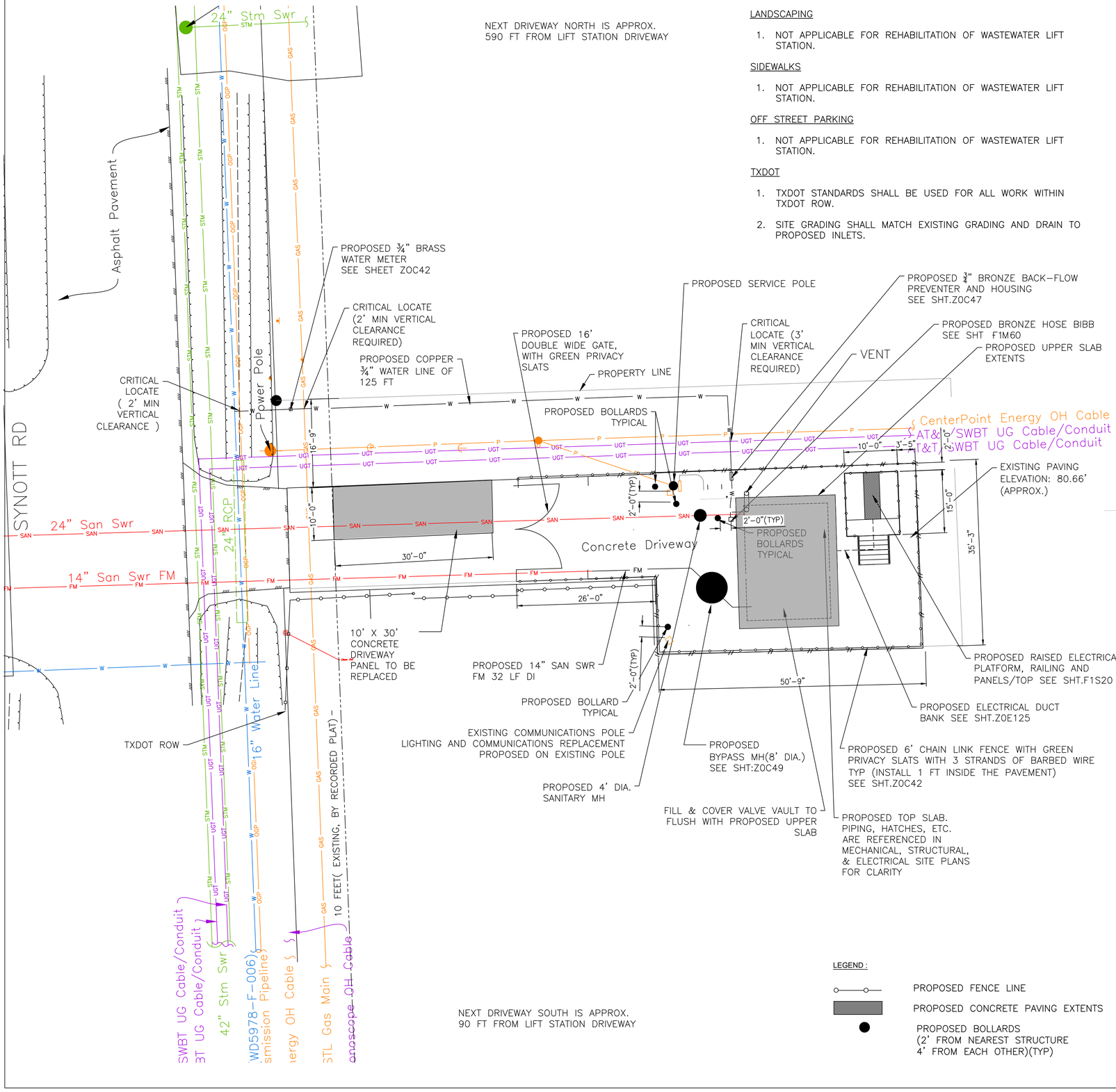

NEXT DRIVEWAY NORTH IS APPROX. 590 FT FROM LIFT STATION DRIVEWAY

NEXT DRIVEWAY SOUTH IS APPROX. 90 FT FROM LIFT STATION DRIVEWAY

LEGEND :

PROPOSED FENCE LINE

PROPOSED CONCRETE PAVING EXTENTS

PROPOSED BOLLARDS (2' FROM NEAREST STRUCTURE 4' FROM EACH OTHER)(TYP)

LANDSCAPING

1. NOT APPLICABLE FOR REHABILITATION OF WASTEWATER LIFT STATION.

SIDEWALKS

1. NOT APPLICABLE FOR REHABILITATION OF WASTEWATER LIFT STATION.

OFF STREET PARKING

1. NOT APPLICABLE FOR REHABILITATION OF WASTEWATER LIFT STATION.

TXDOT

1. TXDOT STANDARDS SHALL BE USED FOR ALL WORK WITHIN TXDOT ROW.
2. SITE GRADING SHALL MATCH EXISTING GRADING AND DRAIN TO PROPOSED INLETS.

NOTES:

GENERAL

1. THIS IS A LIFT STATION REHABILITATION PROJECT (REPLACING PIPES, PUMPS, CONCRETE TOP SLAB AND HATCHES, AND ELECTRICAL FACILITIES) UNDER CONSENT DECREE FOR EARLY ACTION COMPLETION.
2. THIS PROPOSED SITE DEVELOPMENT PLAN PROVIDES A GENERAL OVERVIEW OF THE PROPOSED IMPROVEMENTS WITHIN THE SITE. PLEASE REFER TO PROPOSED SITE PLANS FOR ELECTRICAL, MECHANICAL, AND STRUCTURAL INFORMATION CONTAINED IN THIS DRAWING SET FOR MORE DETAILED INFORMATION.

PLANNING

1. THERE IS A BUILDING SETBACK LINE 10' FROM THE PROPERTY LINE. NO BUILDING STRUCTURES ARE PROPOSED WITHIN THE BUILDING SETBACK LINE.

PLATTING

1. THIS LIFT STATION SITE IS PART OF AND OUT OF UNRESTRICTED RESERVE "A", BRAEWOOD GLEN, SECTION 5, FILED FOR RECORD AT VOL.240, PG.82, HCMR.

FLOODPLAIN

1. LS SITE IS WITHIN THE 500-YEAR FLOODPLAIN, BUT OUTSIDE THE 100-YEAR FLOODPLAIN.
2. PROPOSED ELECTRICAL RACKS AND PANELS TO BE PLACED ON NEW PLATFORM. 500-YEAR + 3' ELEVATION = 85.53'.
3. NO NET FILL IS BEING PROPOSED IN THE FLOODPLAIN. NO FLOODPLAIN MITIGATION IS REQUIRED.
4. WATERTIGHT HATCHES ARE PROPOSED FOR LIFT STATION WET WELL.

STORMWATER

1. DETENTION IS NOT REQUIRED FOR THE WORK PROPOSED ON OFFICE CITY ENGINEER MEMO.
2. DETENTION NOT REQUIRED FOR THE IMPERVIOUS AREA RESULTING FROM THE PROPOSED SITE DISTURBANCE FOR THE LIFT STATION REHAB. SHEET FLOW IS A REASONABLE METHOD FOR STORMWATER DRAINAGE AT THIS SITE.
3. Drainage Analysis:
   a. Additional Impervious = 0 SF.
   There is no increase in runoff and the existing public infrastructure (open ditch) has enough capacity to handle stormwater drainage.
   b. Protection of Adjacent Lots:
   Grading elevations do not change from existing.
   No sheet flow resulting from the proposed plan will or shall impact adjacent properties.

CONSTRUCTION NOTES:

1. CONTRACTOR SHALL BE FULLY RESPONSIBLE FOR ANY DAMAGES TO EXISTING WATER, WASTEWATER, STORMWATER LINES AND TRAFFIC CONTROL DEVICES. ALL DAMAGES SHALL BE IN ACCORDANCE WITH THE "STANDARD CONSTRUCTION SPECIFICATION" REFERENCED AT NO COST TO THE CITY.
2. ADEQUATE DRAINAGE SHALL BE MAINTAINED AT ALL TIMES DURING CONSTRUCTION AND ANY DRAINAGE DITCH OR STRUCTURE DISTURBED DURING CONSTRUCTION SHALL BE RESTORED TO THE SATISFACTION OF THE OWNING AUTHORITY.
3. COAT WET WELL AND SAN MANHOLES IN ACCORDANCE WITH SPEC SECTION 09901
4. CONTRACTOR SHALL TAKE NECESSARY PRECAUTIONS TO PROTECT ROOT SYSTEMS OF SHRUBS, PLANTS, AND TREES ALONG THE AREA OF EXCAVATION.
5. CONTRACTOR SHALL COORDINATE WITH CENTERPOINT ENERGY TO DE-ENERGIZE THE LIFT STATION AND OTHER ELECTRICAL EQUIPMENT ON SITE.
6. SANITARY SEWER MANHOLES AND HATCHES INSTALLED BELOW THE FLOODPLAIN ELEVATION SHALL HAVE WATERTIGHT MANHOLE FRAMES AND COVERS OR HATCHES.
7. CONTRACTOR SHALL COMPLY WITH THE LATEST EDITION OF OSHA REGULATIONS AND THE STATE OF TEXAS LAWS CONCERNING EXCAVATION.
8. CONTRACTOR TO COORDINATE LAYDOWN AREA WITH OWNER.
9. CONTRACTOR TO PROVIDE CONSTRUCTION JOINTS ON PROPOSED PAVING AT INTERVALS NO MORE THAN 15' O/C.

N

0 10 20 Feet

NO.	DATE	REVISION	APP.

NOTICE:
FOR YOUR SAFETY, YOU ARE REQUIRED BY TEXAS LAW TO CALL 811 AT LEAST 48 HOURS BEFORE YOU DIG SO THAT UNDERGROUND LINES CAN BE MARKED. THIS SIGNATURE DOES NOT FULFILL YOUR OBLIGATION TO CALL 811

VERIFICATION OF PRIVATE UTILITY LINES

Mike Brower — 07/31/26 (Date)

CenterPoint Energy natural gas utilities shown. (Gas service lines are not shown). This signature not be used for conflict verification.
Signature valid for six months.

Mike Brower — 07/31/26 (Date)

CenterPoint Energy/UNDERGROUND Electrical Facilities Verification ONLY. (This signature verifies existing underground facilities – not to be used for conflict verification)
Signature valid for six months.

Marc F Johnson — 7/28/26 (Date)

Approved for AT&T underground conduit facilities only.
Signature valid for one year.

FCM Engineers, PC
3300 S. Gessner Rd.
Suite 249
Houston, Texas 77063
T- 713-706-4412
F- 713-706-4410

HATCH
750 TOWN & COUNTRY BLVD
SUITE 650
HOUSTON, TX 77024
P: 832-930-7670
TX FIRM NUMBER: F-314

SURVEYED BY:
AMANI ENGINEERING, INC
FB NO. P-6357

STATE OF TEXAS — FRANK C. MBACHU — 108363 — LICENSED PROFESSIONAL ENGINEER — 3/19/2026

CITY OF HOUSTON
HOUSTON PUBLIC WORKS

LIFT STATION RENEWAL & REPLACEMENT PROJECT
SYNOTT RD #1 LIFT STATION PROPOSED CIVIL SITE DEVELOPMENT PLAN

WBS NUMBER	FOR CITY OF HOUSTON USE ONLY
R-000267-0173-4	HOUSTON PUBLIC WORKS ACCEPTED AND FILED 82825 CITY DRAWING NUMBER Approval Date 08/14/26 HOUSTON TX
DRAWING SCALE	
1"= 10'	
CITY OF HOUSTON PM	
NUPUR KRISHNAN P.E. N.K.	
F1C39	SHEET NO. 213 OF 274

PLOTTED: 8/11/2026 2:10 PM

FILE PATH: Y:\2022071 LIFT STATIONS RENEWAL AND REPLACEMENT (HATCH) WBS NO. R-000267-0173-3\Auto CAD\Site Plan 90%\Synott Rd. No Site Plan - Rev 2\Synott Site Plan Rev 3 R5.dwg

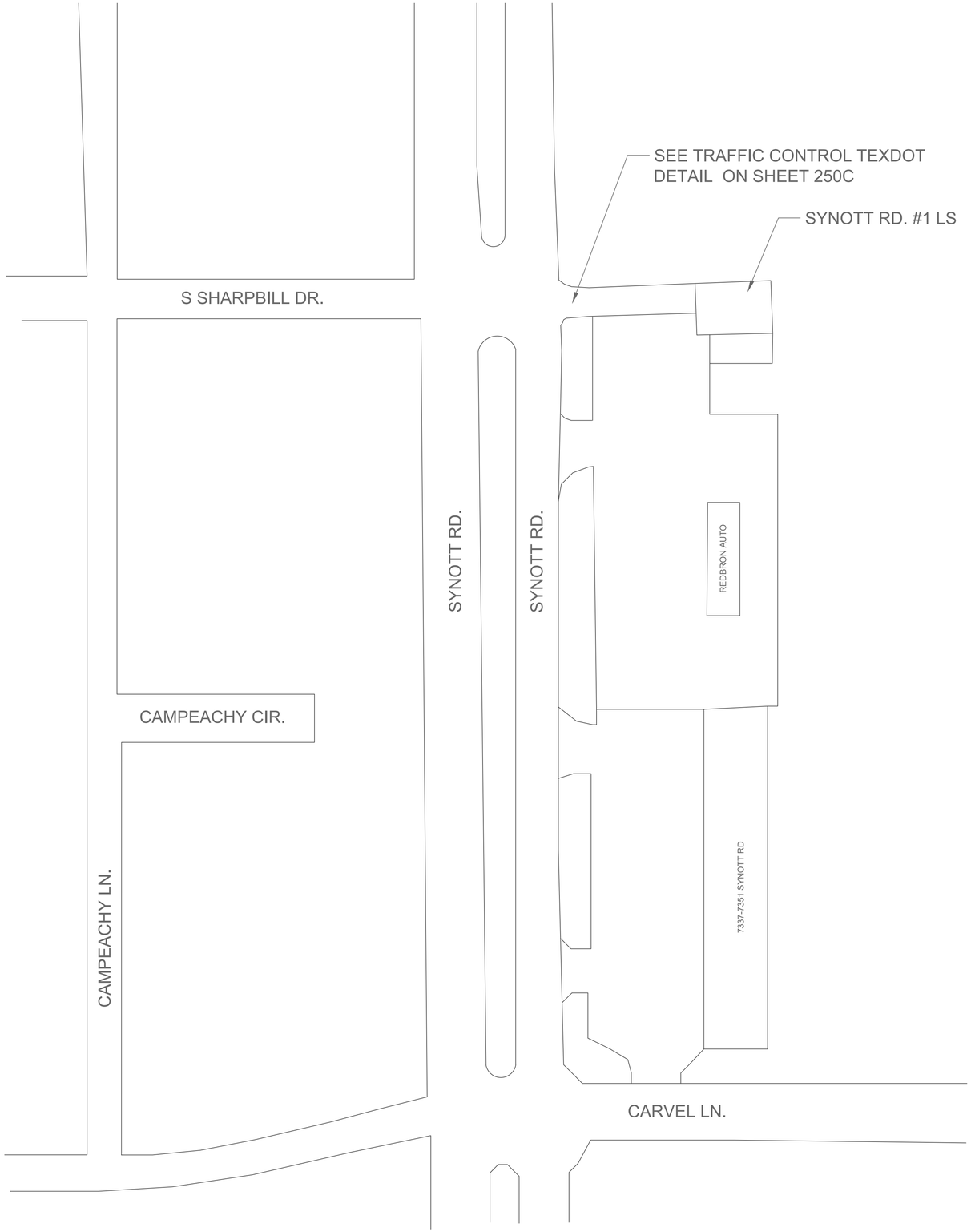

N

NO.	DATE	REVISION	APP.

0 40 80 Feet

HATCH
750 TOWN & COUNTRY BLVD
SUITE 650
HOUSTON, TX 77024
P: 832-930-7670
TX FIRM NUMBER: F- 314

SURVEYED BY:

STATE OF TEXAS
MARK G. SCALLY
136279
LICENSED PROFESSIONAL ENGINEER
5/7/26

CITY OF HOUSTON
HOUSTON PUBLIC WORKS

LIFT STATION RENEWAL & REPLACEMENT PROJECT
SYNOTT RD #1 LS
TRAFFIC CONTROL PLAN

WBS NUMBER
R-000267-0173-4
DRAWING SCALE
AS NOTED
CITY OF HOUSTON PM
NUPUR KRISHNAN, P.E. N.K.
SHEET NO. 214 OF 274

FOR CITY OF HOUSTON USE ONLY

HOUSTON PUBLIC WORKS
ACCEPTED AND FILED
82825
CITY DRAWING NUMBER
Approval Date 08/14/26
HOUSTON TX

F1C40

PLOT STYLE: Grayscale.ctb PLOTTED: 2/2/2026 9:35 AM

FILE PATH: C:\pwworking\hatch-dpd-south_central_us\dms51143\H374729-0600-220-271-0001.dwg

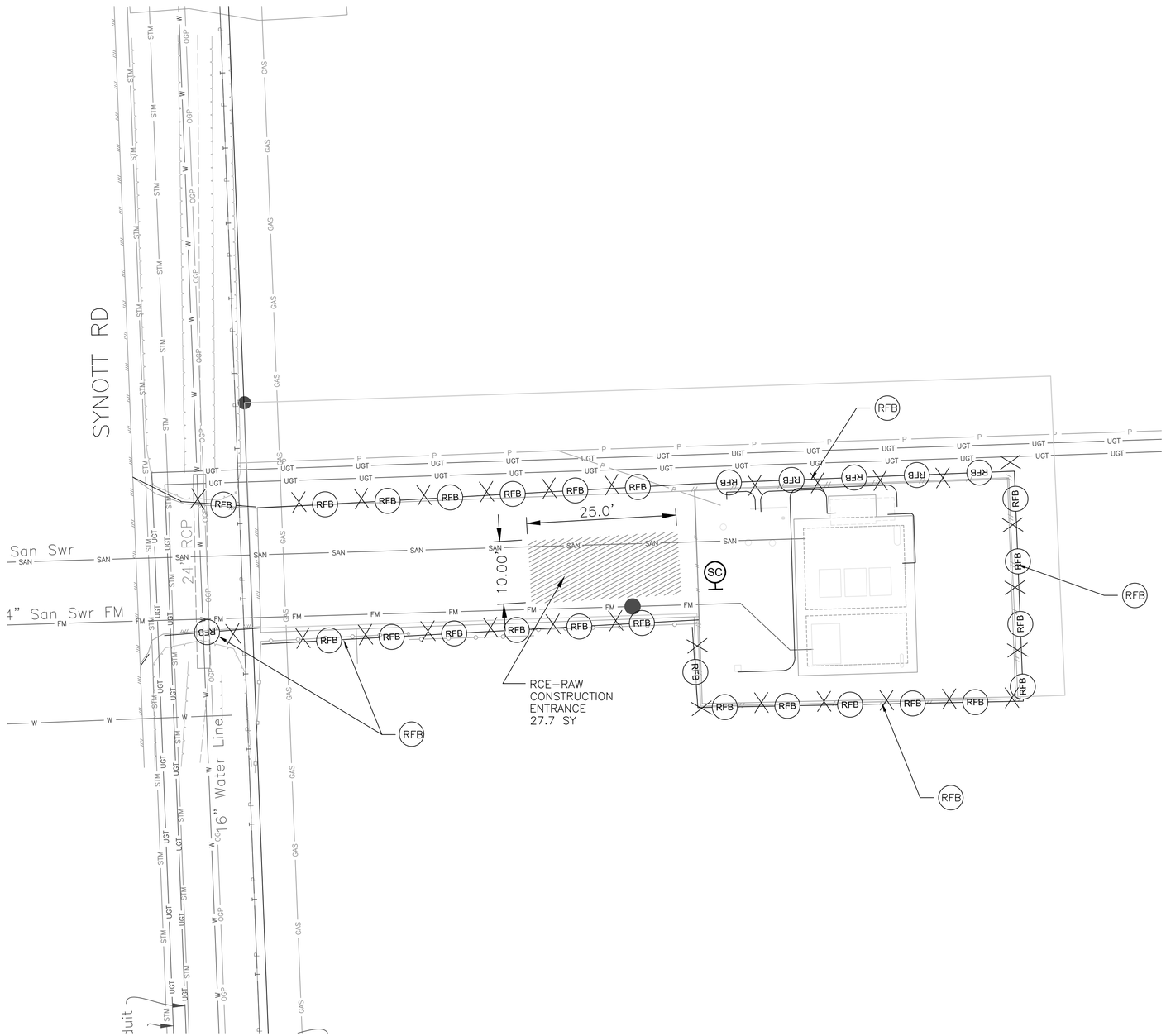

N

0 10 20 Feet

NO.	DATE	REVISION	APP.

LEGEND :

RFB — REINFORCED FILTER FABRIC BARRIER.

SC — STABILIZED CONSTRUCTION ACCESS

NOTES:

1. STORM WATER POLLUTION PLAN CONFORM TO SPECIFICATIONS AND DRAWINGS.
2. ALL DISTURBED AREAS THAT ARE NOT PAVED OR COVERED BY STRUCTURE SHALL BE SODDED OR HYDROMULCH SEEDED.
3. CONTRACTOR'S LAY DOWN/STORAGE AREA SHALL HAVE A STABILIZED CONSTRUCTION EXIT.
4. SEE SHEET Z0G06 FOR STORM WATER POLLUTION PREVENTION PLAN NOTES AND DETAILS.
5. CONTRACTOR SHALL PROVIDE A STABILIZED CONSTRUCTION EXIT, INCLUDING TRUCK WASHING AREA, VERIFIED IN THE FIELD AND AUTHORIZED BY ENGINEER.

FCM Engineers, PC
3300 S. Gessner Rd.
Suite 249
Houston, Texas 77063
T- 713-706-4412
F- 713-706-4410

HATCH
750 TOWN & COUNTRY BLVD
SUITE 650
HOUSTON, TX 77024
P: 832-930-7670
TX FIRM NUMBER: F-314

SURVEYED BY:
AMANI ENGINEERING, INC
FB NO. P-6357

STATE OF TEXAS
FRANK C. MBACHU
108363
LICENSED
PROFESSIONAL ENGINEER
5/23/2026

CITY OF HOUSTON
HOUSTON PUBLIC WORKS

LIFT STATION RENEWAL & REPLACEMENT PROJECT
SYNOTT RD #1 LIFT STATION
CIVIL SWPPP

WBS NUMBER	FOR CITY OF HOUSTON USE ONLY
R-000267-0173-4	HOUSTON PUBLIC WORKS ACCEPTED AND FILED 82825 CITY DRAWING NUMBER Approval Date 08/14/26 HOUSTON TX
DRAWING SCALE	
1"= 10'	
CITY OF HOUSTON PM	
NUPUR KRISHNAN P.E. N.K.	
F1C41 SHEET NO. 215 OF 274	

FILE PATH: Y:\2022071 LIFT STATIONS RENEWAL AND REPLACEMENT (HATCH) WBS NO. R-000267-0173-3\Auto CAD\New SWPPP\Synott Rd. No. 1 Topo\BASE-SynottRd#1LS.dwg PLOT STYLE: Grayscale.ctb PLOTTED: 6/5/2026 9:05 AM

PLOT STYLE: Monochrome.ctb PLOTTED: 7/27/2026 5:47 AM

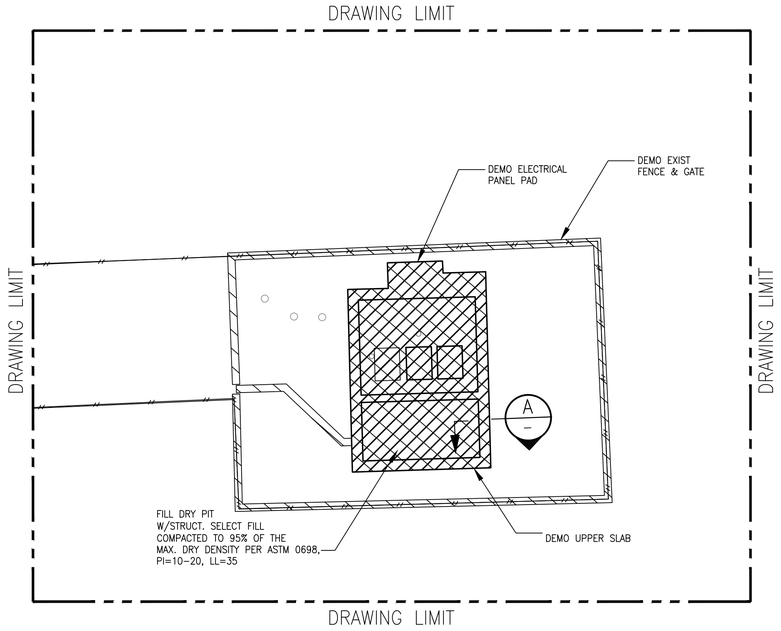

DEMO PLAN
SCALE: 1" = 10'-0"

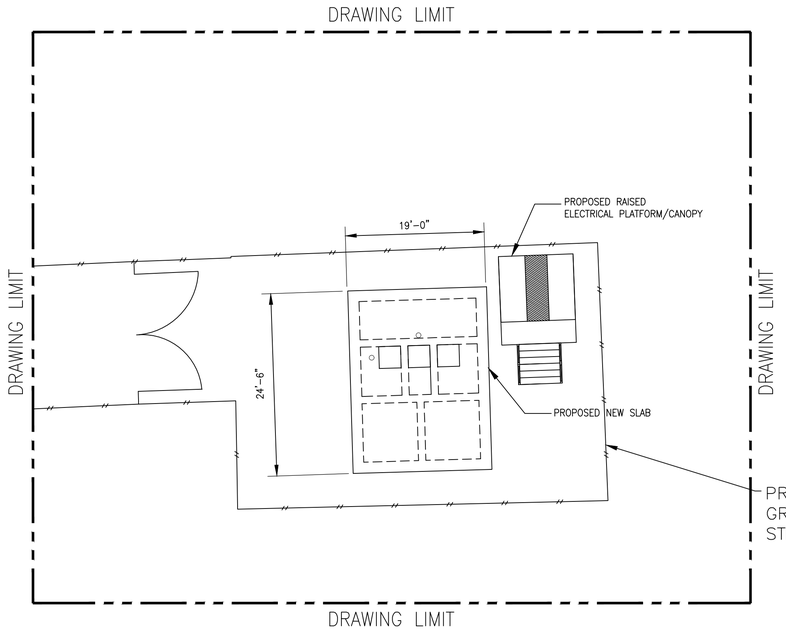

NEW PLAN LAYOUT
SCALE: 1" = 10'-0"

NOTE:

THE CITY SHALL HAVE THE FIRST RIGHT OF REFUSAL TO RETAIN OR SALVAGE ALL ITEMS SHOWN TO BE DEMOLISHED AND/OR REMOVED, INCLUDING BUT NOT LIMITED TO PUMPS, HATCHES, AND ELECTRICAL AND INSTRUMENTATION COMPONENTS. PRIOR TO INITIATING DEMO WORK, THE CONTRACTOR AND THE DESIGNATED FIELD INSPECTOR SHALL MAKE A JOINT INSPECTION OF EACH TO IDENTIFY ALL EQUIPMENT TO BE RETAINED BY THE CITY FOR SALVAGE AND REUSE. ITEMS IDENTIFIED FOR SALVAGE SHALL BE CAREFULLY REMOVED TO PROTECT FROM DAMAGE. ALL OTHER ITEMS SHOWN TO BE DEMOLISHED / REMOVED THAT ARE NOT RETAINED BY THE CITY SHALL BE PROPERLY REMOVED FROM THE SITE AND HANDLED PER SPECIFICATIONS AT NO ADDITIONAL COST TO THE CITY. CONTACT CITY DESIGNATED CITY REPRESENTATIVE FOR WASTEWATER TREATMENT PLANT SALVAGE AT LEAST 72 HOURS PRIOR TO DEMOLITION IN ORDER TO COORDINATE REMOVAL OF ANY ITEMS THE CITY WISHES TO CLAIM AND SALVAGE. THE CONTRACTOR SHALL DELIVER ALL SALVAGE ITEMS TO A LOCATION WITHIN THE CITY DETERMINED BY THE CITY.

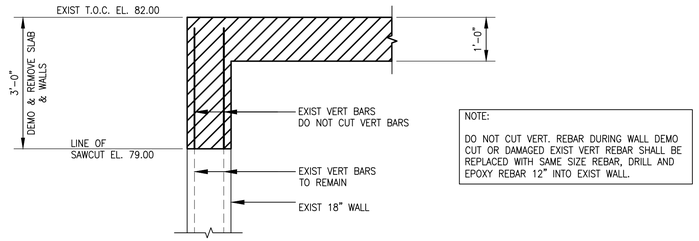

NOTE:

DO NOT CUT VERT. REBAR DURING WALL DEMO CUT OR DAMAGED EXIST VERT REBAR SHALL BE REPLACED WITH SAME SIZE REBAR, DRILL AND EPOXY REBAR 12" INTO EXIST WALL.

A: TYPICAL DEMO SECTION
SCALE: N.T.S

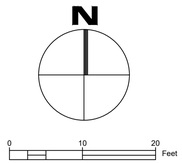

NO.	DATE	REVISION	APP.

FCM Engineers, PC
3300 S. Gessner Rd. Suite 249
T- 713-706-4412
F- 713-706-4410
Tx Firm No. 13481

HATCH
750 TOWN & COUNTRY BLVD
SUITE 650
HOUSTON, TX 77024
P: 832-930-7670
TX FIRM NUMBER: F-314

STATE OF TEXAS — CHARLES C.A. MGBEIKE — 73307 — LICENSED PROFESSIONAL ENGINEER — 05/19/26

SURVEYED BY:
AMANI ENGINEERING, INC
FB NO. P-6357

CITY OF HOUSTON
HOUSTON PUBLIC WORKS

LIFT STATION RENEWAL & REPLACEMENT PROJECT
SYNOTT RD. LIFT STATION
PROPOSED DEMOLITION & STRUCTURAL PLAN

WBS NUMBER
R-000267-0173-4
DRAWING SCALE
AS NOTED
CITY OF HOUSTON PM
NUPUR KRISHNAN P.E. N.K.
F1S18 SHEET NO. 216 OF 274

FOR CITY OF HOUSTON USE ONLY

HOUSTON PUBLIC WORKS
ACCEPTED AND FILED
82825
CITY DRAWING NUMBER
Approval Date 08/14/26
HOUSTON TX

FILE PATH: C:\Users\francis.iheagwara\Desktop\FOI\Lift Station\CAD\MBK\Synott\FINAL\Synott Demo & Const.dwg

PLOT STYLE: Monochrome.ctb PLOTTED: 8/10/2026 8:12 PM
FILE PATH: C:\Users\francis.iheagwara\Desktop\FOI\Lift Station\CAD\MBK\Synott\FINAL\Synott New Slab.dwg

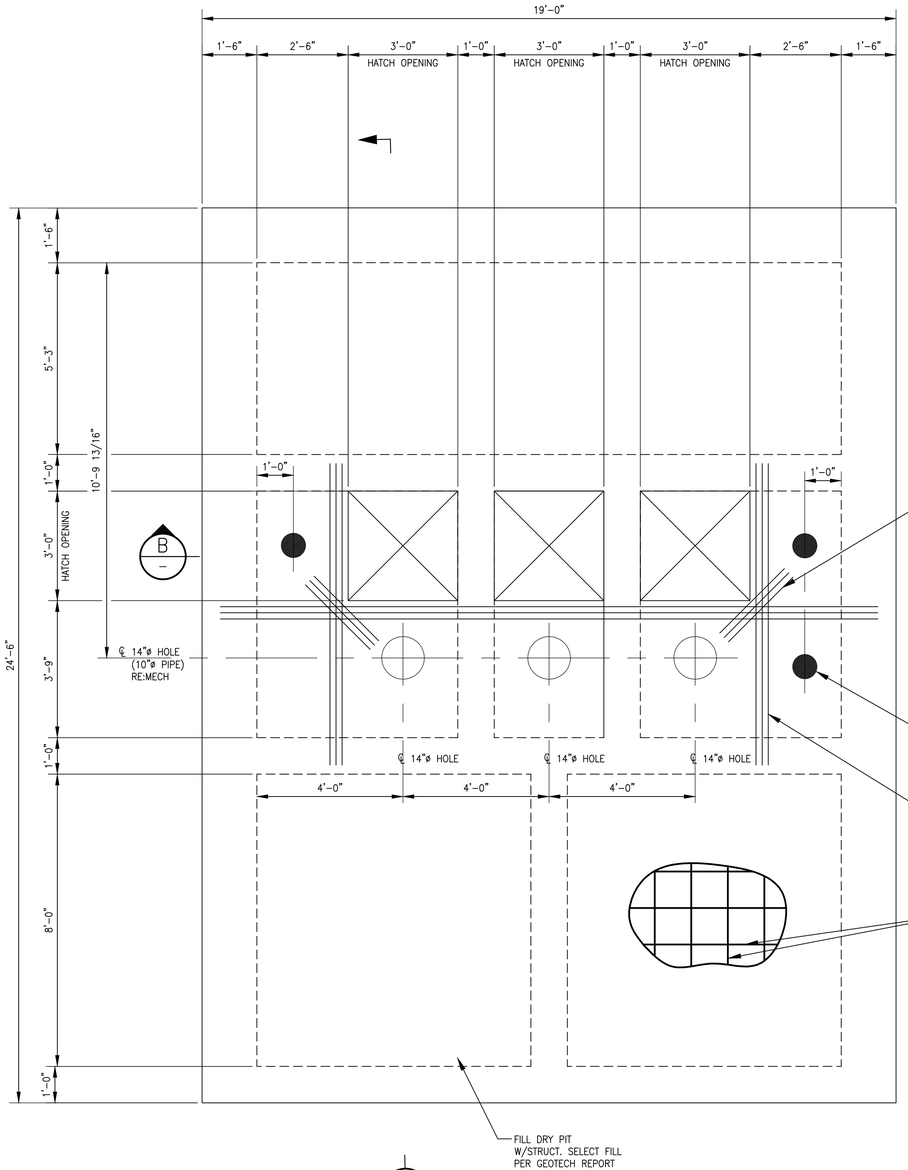

A

PLAN
LIFT STATION FOUNDATION
SCALE: 1/2" = 1'-0"

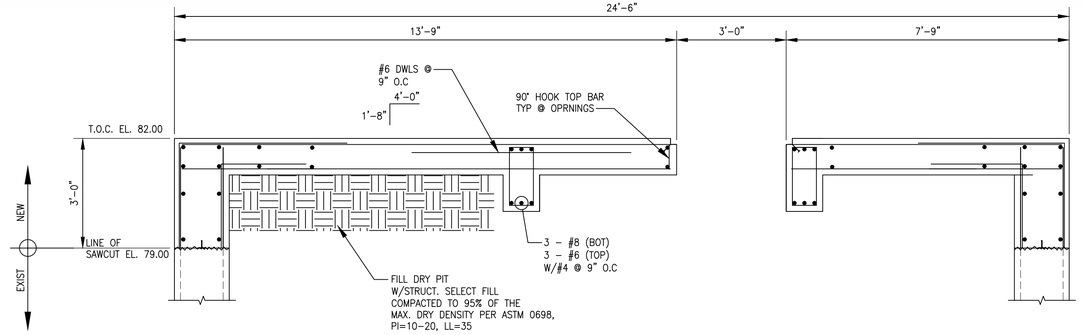

SECTION A
SCALE: 1/2" = 1'-0"

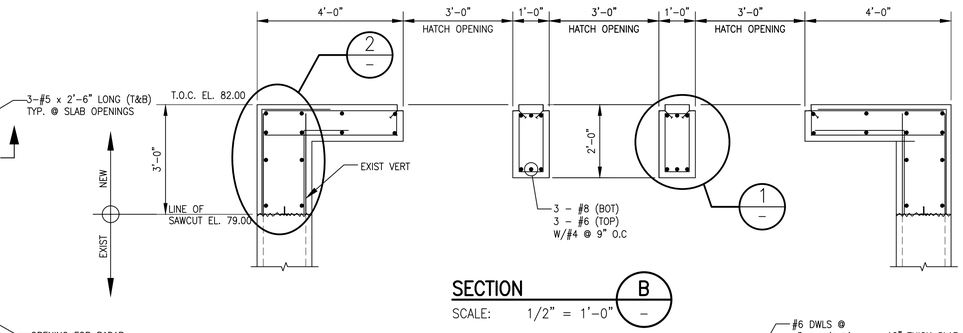

SECTION B
SCALE: 1/2" = 1'-0"

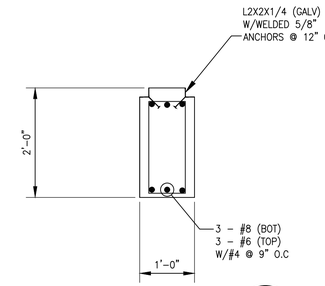

DETAIL 1
SCALE: 3/4" = 1'-0"

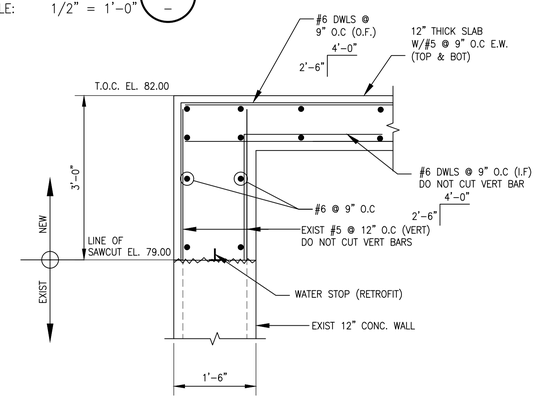

DETAIL 2
SCALE: 3/4" = 1'-0"

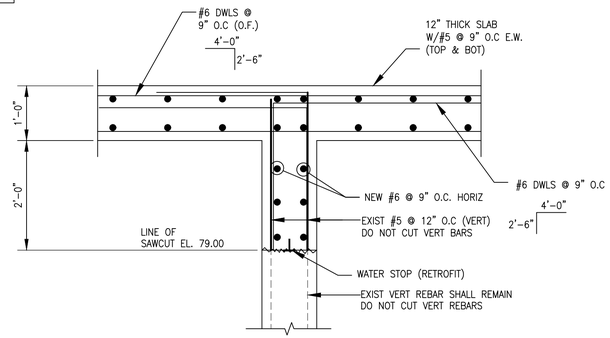

TYPICAL INTERIOR WALL DETAIL
SCALE: 3/4"= 1'-0"

NOTE:

1. REFER TO SHEET ZOS21 FOR STRUCTURAL GENERAL NOTES
2. REFER TO MECHANICAL/VENDOR DRAWINGS FOR WATERPROOF HATCHES/MANHOLES HATCHES SHALL BE SIZED PER PUMP MANUFACTURER AND SHALL BE FLUSHED WITH THE PROPOSED TOP SLAB
3. CONTRACTOR SHALL FIELD VERIFY AND COORDINATE ALL DIMENSION W/MEP & CIVIL PLANS PRIOR TO BIDDING WORK.
4. REFER TO ELECTRICAL FOR RADAR LEVEL SENSOR OPENINGS & MECHANICAL DRAWING FOR OTHER PIPE PENETRATIONS, CONDUITS, VENTS ETC.
5. REFER TO SPECS 09901 FOR WET WELL WALL CLEANING & COATING SPECS.
6. REFER TO COH STD DETAILS ZOS22, 23, 24, 25, 26.

NO.	DATE	REVISION	APP.

FCM Engineers, PC
3300 S. Gessner Rd.
Suite 249
T- 713-706-4412
F- 713-706-4410
Tx Firm No. 13481

HATCH
750 TOWN & COUNTRY BLVD
SUITE 650
HOUSTON, TX 77024
P: 832-930-7670
TX FIRM NUMBER: F-314

SURVEYED BY:
AMANI ENGINEERING, INC
FB NO. P-6357

STATE OF TEXAS
CHARLES C.A. MGBEIKE
73307
LICENSED PROFESSIONAL ENGINEER
05/19/26

CITY OF HOUSTON
HOUSTON PUBLIC WORKS

LIFT STATION RENEWAL & REPLACEMENT PROJECT
SYNOTT LIFT STATION
PROPOSED STRUCTURAL PLAN, SECTIONS & DETAILS

WBS NUMBER	FOR CITY OF HOUSTON USE ONLY
R-000267-0173-4	HOUSTON PUBLIC WORKS ACCEPTED AND FILED 82825 CITY DRAWING NUMBER Approval Date 08/14/26 HOUSTON TX
DRAWING SCALE	
AS NOTED	
CITY OF HOUSTON PM	
NUPUR KRISHNAN P.E. N.K.	
F1S19	SHEET NO. 217 OF 274

PLOT STYLE: Monochrome.ctb PLOTTED: 7/27/2026 5:48 AM
FILE PATH: C:\Users\francis.iheagwara\Desktop\FOI\Lift Station\CAD\MBK\Synott\FINAL\ELEVATED ELECTRICAL CABINET PLTF FOUNDATION.dwg

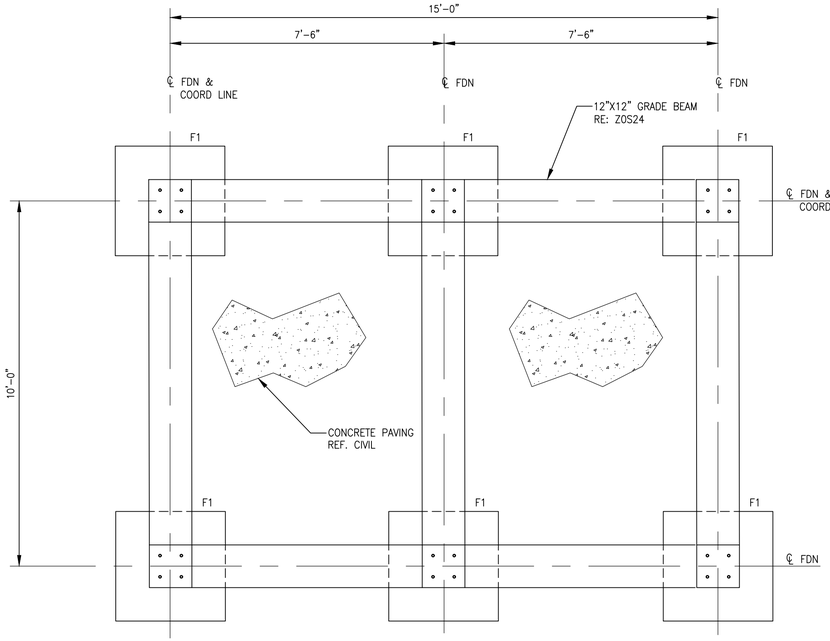

PLAN
PLATFORM FOUNDATION
SCALE: 1/2" = 1'-0"

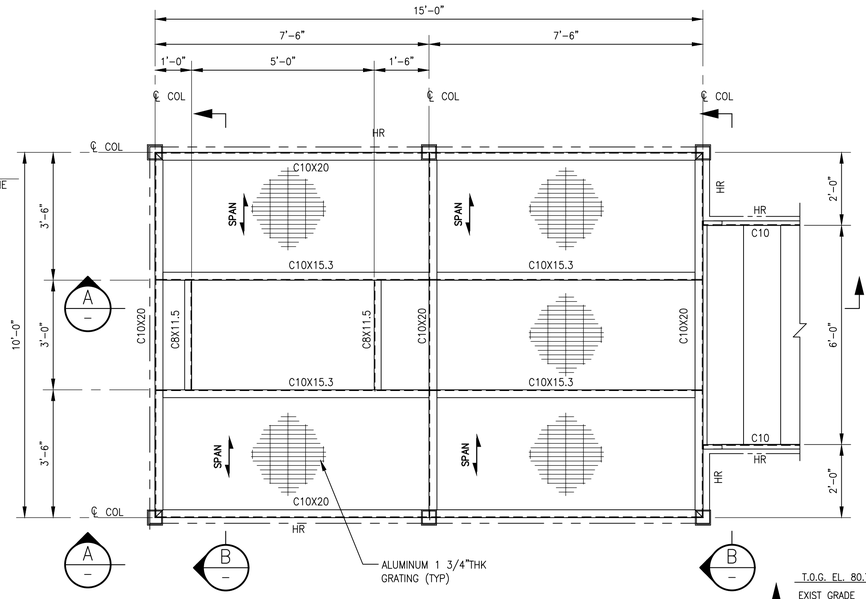

PLAN
PLATFORM FRAMING
(T.O. GRTG +1 3/4")
SCALE: 1/2" = 1'-0"

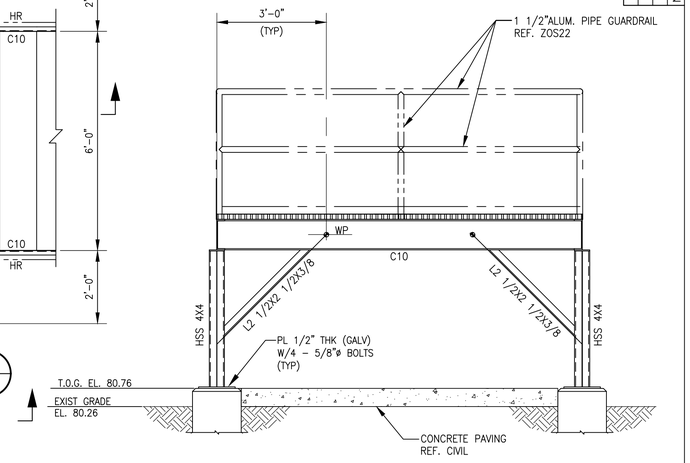

SECTION B
SCALE: 1/2" = 1'-0"

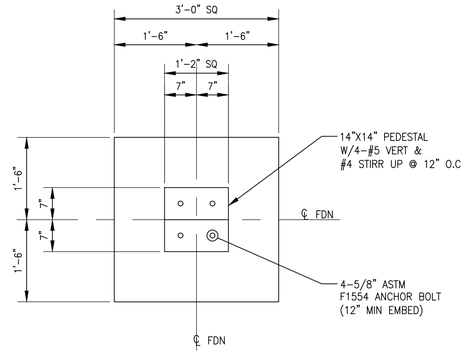

TYPICAL F1 FOUNDATION
SCALE: 3/4" = 1'-0"
(6 REQ'D)

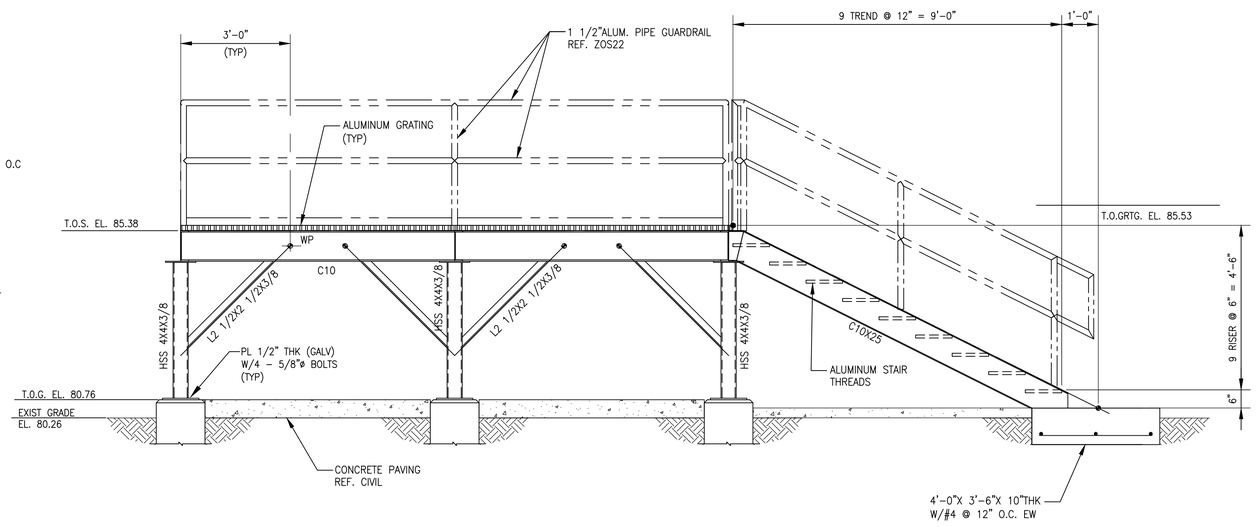

SECTION A
SCALE: 1/2" = 1'-0"

NOTE:

1. REFER TO SHEET ZOS21 FOR STRUCTURAL GENERAL NOTES
2. CONTRACTOR SHALL FIELD VERIFY AND COORDINATE ALL DIMENSIONS W/MEP & CIVIL PLANS PRIOR TO BIDDING WORK.
3. REFER TO COH STD DETAILS ZOS22, 23, 24, 25, 26.
4. ALL STRUCTURAL STEEL SHALL BE HOT DIPPED GALV.
5. ALL ALUM SHALL BE POWDER COATED DARK GREEN PER ZOS21.
6. ALL GRATING SHALL BE ALUMINUM.

NO.	DATE	REVISION	APP.

FCM Engineers, PC
3300 S. Gessner Rd. Suite 249
T- 713-706-4412
F- 713-706-4410
Tx Firm No. 13481

HATCH
750 TOWN & COUNTRY BLVD
SUITE 650
HOUSTON, TX 77024
P: 832-930-7670
TX FIRM NUMBER: F-314

SURVEYED BY:
AMANI ENGINEERING, INC
FB NO. P-6357

STATE OF TEXAS
CHARLES C.A. MGBEKE
73307
LICENSED PROFESSIONAL ENGINEER
05/19/26

CITY OF HOUSTON
HOUSTON PUBLIC WORKS

LIFT STATION RENEWAL & REPLACEMENT PROJECT
SYNOTT RD. LIFT STATION
PROPOSED STRUCTURAL ELECTRICAL PLATFORM FOUNDATION & STEEL PLANS & SECTIONS

WBS NUMBER	FOR CITY OF HOUSTON USE ONLY
R-000267-0173-4	HOUSTON PUBLIC WORKS ACCEPTED AND FILED 82825 CITY DRAWING NUMBER Approval Date 08/14/26 HOUSTON TX
DRAWING SCALE	
AS NOTED	
CITY OF HOUSTON PM	
NUPUR KRISHNAN P.E. N.K.	
F1S20	SHEET NO. 218 OF 274

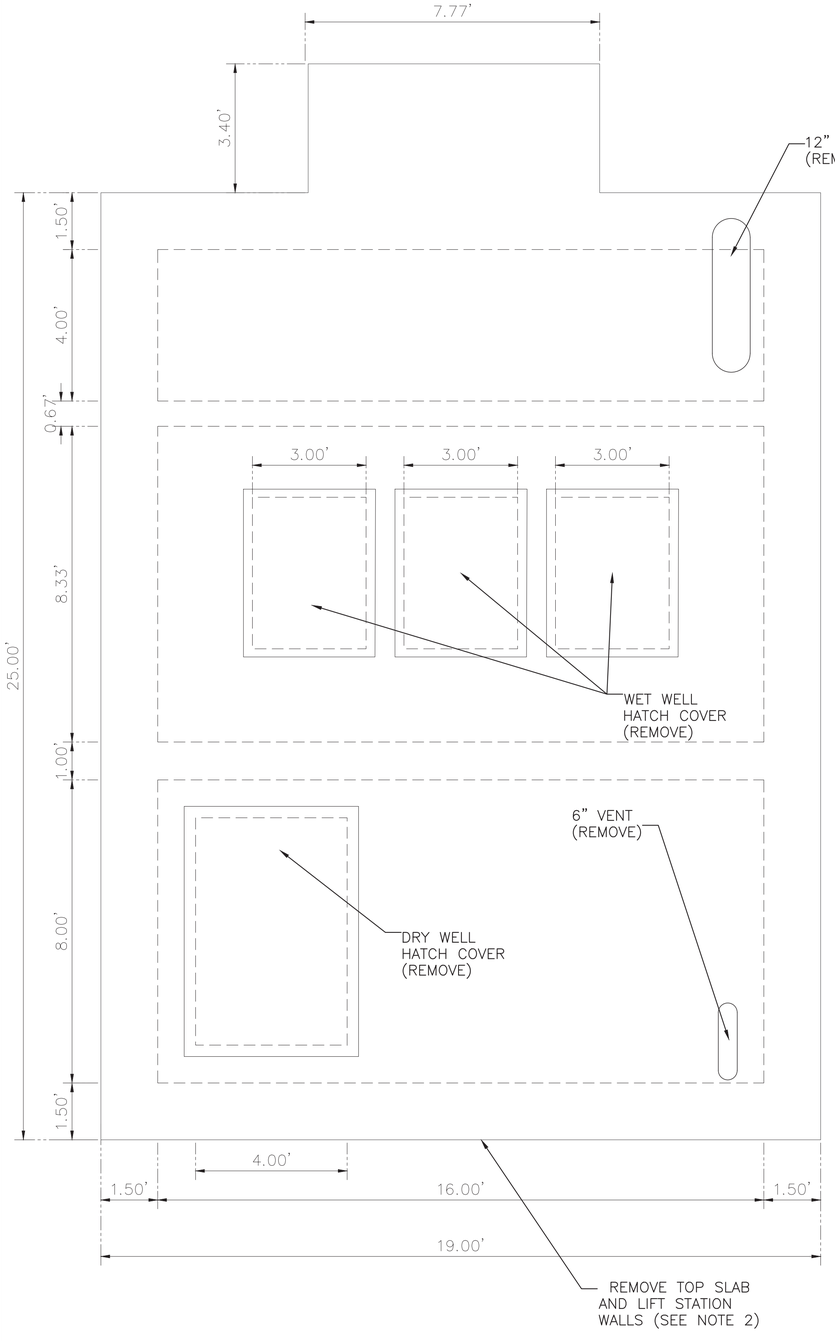

SURFACE PLAN VIEW

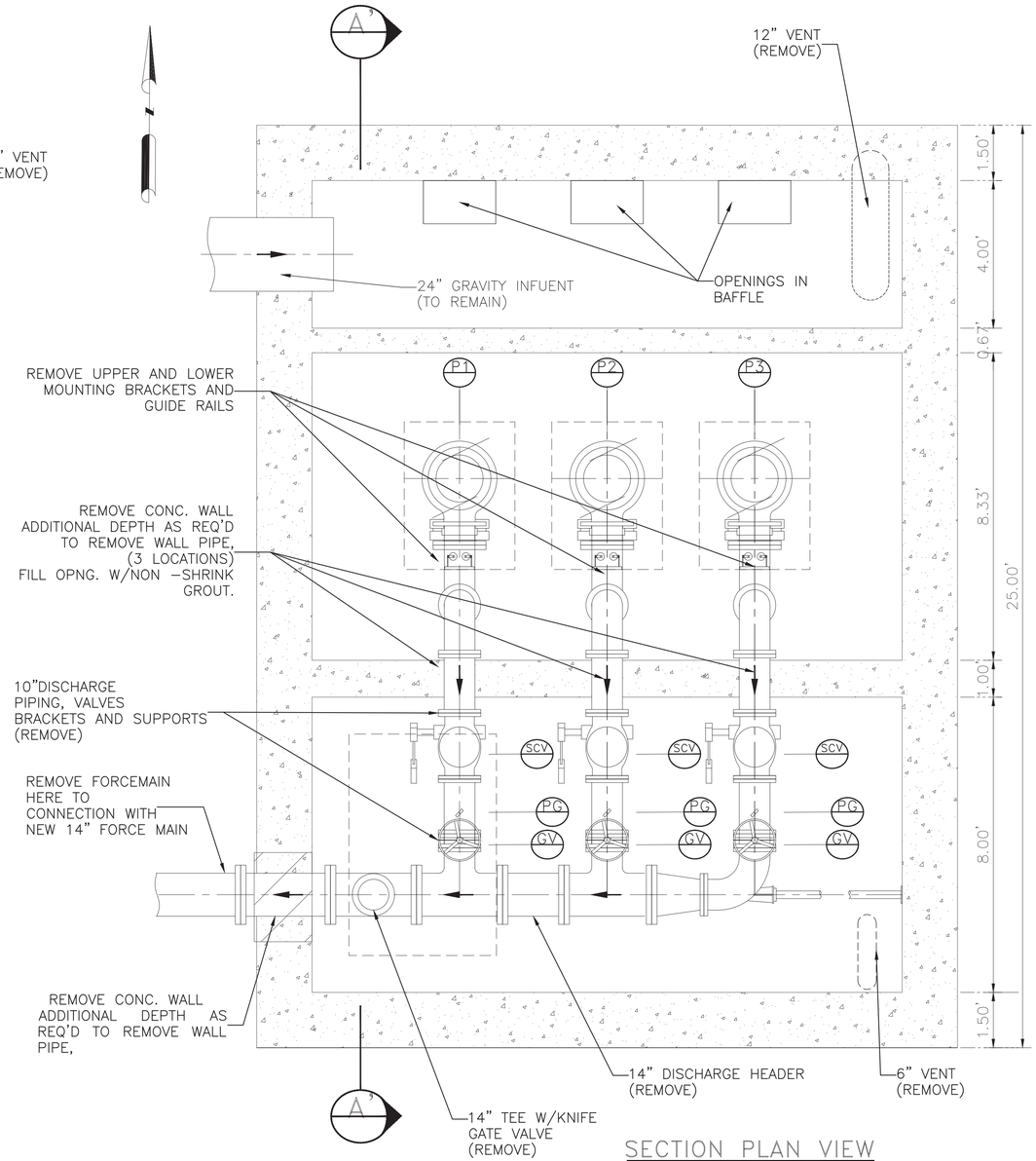

SECTION PLAN VIEW

LEGEND

- SCV — SWING CHECK VALVE (REMOVE)
- GV — KNIFE GATE VALVE (REMOVE)
- PG — PRESSURE GAUGE (REMOVE)
- P1 — SUBMERSIBLE PUMP (REMOVE)
- P2 — SUBMERSIBLE PUMP (REMOVE)
- P3 — SUBMERSIBLE PUMP (REMOVE)

THE CITY SHALL HAVE THE FIRST RIGHT OF REFUSAL TO RETAIN OR SALVAGE ALL ITEMS SHOWN TO BE DEMOLISHED AND/OR REMOVED, INCLUDING BUT NOT LIMITED TO PUMPS, HATCHES, AND ELECTRICAL AND INSTRUMENTATION COMPONENTS. PRIOR TO INITIATING DEMO WORK, THE CONTRACTOR AND THE DESIGNATED FIELD INSPECTOR SHALL MAKE A JOINT INSPECTION OF EACH SITE TO IDENTIFY ALL EQUIPMENT TO BE RETAINED BY THE CITY FOR SALVAGE AND REUSE. ITEMS IDENTIFIED FOR SALVAGE SHALL BE CAREFULLY REMOVED TO PROTECT FROM DAMAGE. ALL OTHER ITEMS SHOWN TO BE DEMOLISHED / REMOVED THAT ARE NOT RETAINED BY THE CITY SHALL BE PROPERLY REMOVED FROM THE SITE AND HANDLED PER SPECIFICATIONS AT N O ADDITIONAL COST TO THE CITY. CONTACT CITY DESIGNATED CITY REPRESENTATIVE FOR WASTEWATER TREATMENT PLANT SALVAGE AT LEAST 72 HOURS PRIOR TO DEMOLITION IN ORDER TO COORDINATE REMOVAL OF ANY ITEMS THE CITY WISHES TO CLAIM AND SALVAGE. THE CONTRACTOR SHALL DELIVER ALL SALVAGE ITEMS TO A LOCATION WITHIN THE CITY DETERMINED BY THE CITY.

DEMOLITION NOTES:

1. THIS DRAWING IS BASED ON AVAILABLE RECORDS AND FIELD OBSERVATIONS. THE CONTRACTOR SHALL SATISFY HIMSELF / HERSELF OF THE ACTUAL CONDITIONS EXISTING AT THE SITE. THIS DRAWING DEPICTS PRIMARY MECHANICAL FEATURES. NOT ALL FEATURES, INCLUDING ELECTRICAL ARE NECESSARILY DEPICTED HEREON. THE CONTRACTOR SHALL BE RESPONSIBLE FOR REMOVING ALL EXISTING EQUIPMENT WITHIN THE EXISTING STRUCTURE AS A PRECURSOR TO CONSTRUCTION OF THE PROPOSED IMPROVEMENTS.
2. DEMOLISH AND REMOVE TOP AND SIDE WALLS OF LIFT STATION TO 2-FEET 6-INCHES BELOW LIFT STATION TOP SLAB ELEVATION. STEEL IN WALLS TO REMAIN (WHERE POSSIBLE) AND BE USED TO DEVELOP REINFORCEMENT FOR NEW TOP SLAB (REFER TO STRUCTURAL DETAILS).
3. THE CONTRACTOR SHALL NOT PROCEED WITH DEMOLITION WORK UNTIL AUTHORIZED. LIFT STATION BYPASS PUMPING MUST BE IN PLACE WITH OPERATIONAL ADEQUACY CHECKED AND CONFIRMED BY THE CITY BEFORE PROCEEDING WITH DEMOLITION WORK.
4. THE CONTRACTOR SHALL BE RESPONSIBLE FOR OBTAINING ANY PERMIT(S) REQUIRED FOR DEMOLITION WORK.
5. ALL ITEMS DAMAGED OR REMOVED BY THE CONTRACTOR AND NOT SPECIFICALLY DESIGNATED FOR DEMOLITION SHALL BE REPAIRED OR REPLACED BY THE CONTRACTOR AT NO COST TO THE CITY.
6. THE CONTRACTOR MAY DISCHARGE LIQUID WASTE AND WASH DOWN TO THE CITY WASTEWATER COLLECTION SYSTEM, HOWEVER; ALL DISCHARGES MUST BE COMPLIANT WITH THE CITY'S INDUSTRIAL WASTE ORDINANCE, CHAPTER 47, ARTICLE V. THE CONTRACTOR IS ADVISED THAT A PERMIT OR TEMPORARY DISCHARGE AUTHORIZATION MAY BE REQUIRED. CONTACT THE INDUSTRIAL WASTEWATER DIVISION AT (832) 395-5800. IN LIEU OF A DISCHARGE AUTHORIZATION, THE CONTRACTOR SHALL COLLECT AND HAUL, AT CONTRACTOR EXPENSE, ALL NON-SOLID DISCHARGES TO AN APPROVED CITY FACILITY.
7. REFER TO STRUCTURAL AND ELECTRICAL DEMOLITION DRAWINGS FOR INFORMATION RELATED TO THOSE SPECIFIC ACTIVITIES.

AMANI ENGINEERING, INC.
11011 RICHMOND AVENUE
SUITE 700
HOUSTON, TEXAS 77024
TEL: (713) 270-5700
TBPE REG. NO. F-4528
TBPELS REG. NO. 1028200

HATCH
750 TOWN & COUNTRY BLVD.
SUITE 650
HOUSTON, TEXAS 77024
P:832-930-7670
TX FIRM NUMBER: F-314

SURVEYED BY:
AMANI ENGINEERING,INC.
FB NO. P-6357

STATE OF TEXAS
DAVID L BROWN
48282
REGISTERED
PROFESSIONAL ENGINEER
8/11/2026

CITY OF HOUSTON
HOUSTON PUBLIC WORKS

LIFT STATION RENEWAL & REPLACEMENT PROJECT

SYNOTT RD #1 LIFT STATION
EXISTING SURFACE PLAN VIEW
MECHANICAL DEMOLITION

WBS NUMBER	FOR CITY OF HOUSTON USE ONLY
R-000267-0173-4	HOUSTON PUBLIC WORKS ACCEPTED AND FILED 82825 CITY DRAWING NUMBER Approval Date 08/14/26 HOUSTON TX
DRAWING SCALE	
Scale 1"=2'	
CITY OF HOUSTON PM	
N.K. NUPUR KRISHNAN, PE	
F1M52	SHEET NO. 219 OF 274

0 1 2 3 ORIGINAL SCALE IN INCHES FOR REDUCED PLANS

FILE NAME:
PLOTTED ON:

P:\Cadd\2024\24013 - Hatch - COH FY20 Lift Stations\CAD_DWG\LIFT STATIONS MECHANICAL DEMOLITION PLAN\3-SYNOTT RD #1\LS-SYNOTT RD #1 10 2025.dwg

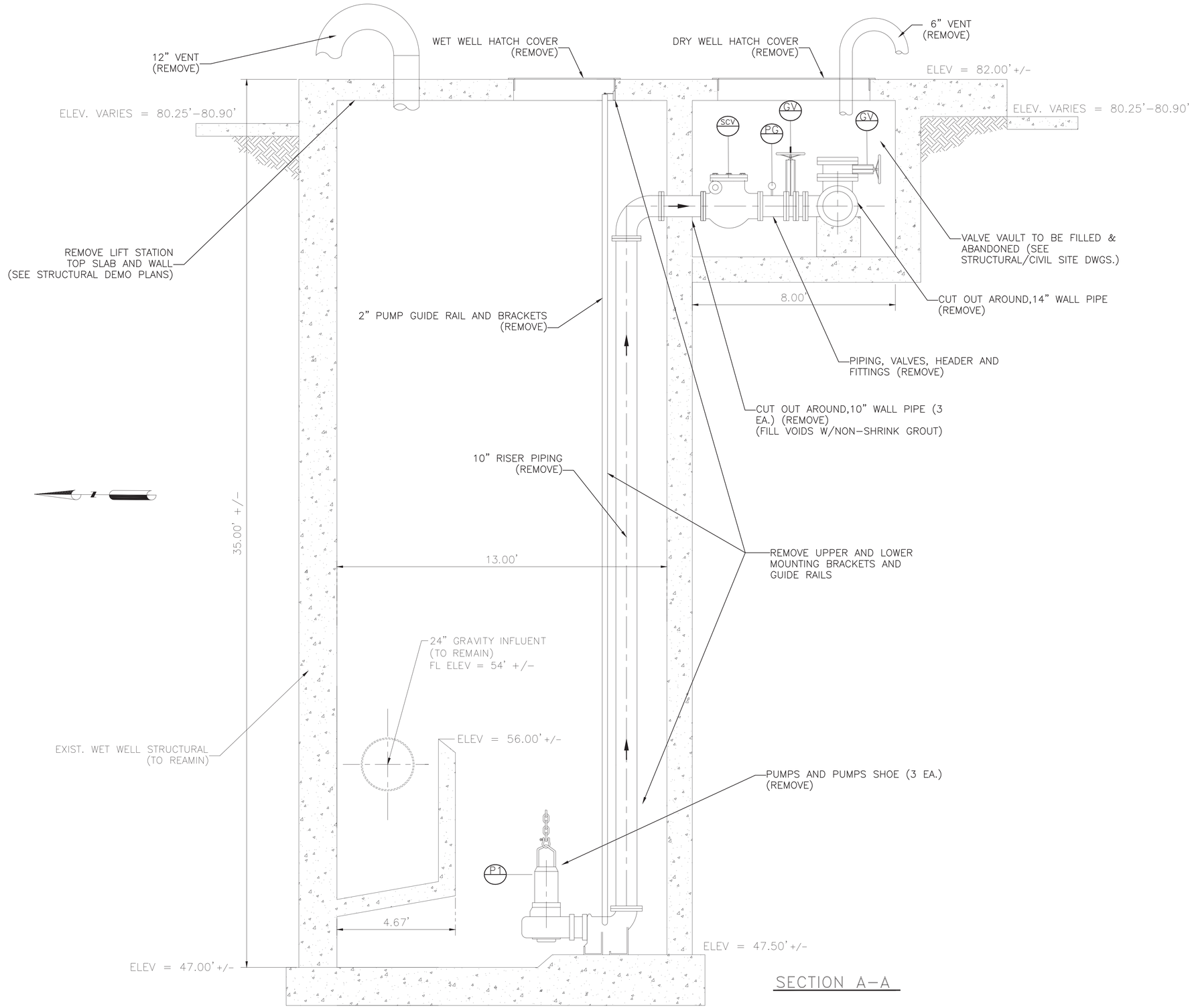

SECTION A-A

THE CITY SHALL HAVE THE FIRST RIGHT OF REFUSAL TO RETAIN OR SALVAGE ALL ITEMS SHOWN TO BE DEMOLISHED AND/OR REMOVED, INCLUDING BUT NOT LIMITED TO PUMPS, HATCHES, AND ELECTRICAL AND INSTRUMENTATION COMPONENTS. PRIOR TO INITIATING DEMO WORK, THE CONTRACTOR AND THE DESIGNATED FIELD INSPECTOR SHALL MAKE A JOINT INSPECTION OF EACH SITE TO IDENTIFY ALL EQUIPMENT TO BE RETAINED BY THE CITY FOR SALVAGE AND REUSE. ITEMS IDENTIFIED FOR SALVAGE SHALL BE CAREFULLY REMOVED TO PROTECT FROM DAMAGE. ALL OTHER ITEMS SHOWN TO BE DEMOLISHED / REMOVED THAT ARE NOT RETAINED BY THE CITY SHALL BE PROPERLY REMOVED FROM THE SITE AND HANDLED PER SPECIFICATIONS AT N O ADDITIONAL COST TO THE CITY. CONTACT CITY DESIGNATED CITY REPRESENTATIVE FOR WASTEWATER TREATMENT PLANT SALVAGE AT LEAST 72 HOURS PRIOR TO DEMOLITION IN ORDER TO COORDINATE REMOVAL OF ANY ITEMS THE CITY WISHES TO CLAIM AND SALVAGE. THE CONTRACTOR SHALL DELIVER ALL SALVAGE ITEMS TO A LOCATION WITHIN THE CITY DETERMINED BY THE CITY.

LEGEND

- SCV — SWING CHECK VALVE (REMOVE)
- GV — KNIFE GATE VALVE (REMOVE)
- PG — PRESSURE GAUGE (REMOVE)
- P1 — SUBMERSIBLE PUMP (REMOVE)
- P2 — SUBMERSIBLE PUMP (REMOVE)
- P3 — SUBMERSIBLE PUMP (REMOVE)

AMANI ENGINEERING, INC.
11011 RICHMOND AVENUE
SUITE 700
HOUSTON, TEXAS 77024
TEL: (713) 270-5700
TBPE REG. NO. F-4528
TBPELS REG. NO. 1028200

HATCH
750 TOWN & COUNTRY BLVD.
SUITE 650
HOUSTON, TEXAS 77024
P:832-930-7670
TX FIRM NUMBER: F-314

SURVEYED BY:
AMANI ENGINEERING,INC.
FB NO. P-6357

STATE OF TEXAS
DAVID L. BROWN
48282
REGISTERED
PROFESSIONAL SURVEYOR
8/11/2026

CITY OF HOUSTON
HOUSTON PUBLIC WORKS

LIFT STATION RENEWAL & REPLACEMENT PROJECT

SYNOTT RD #1, LIFT STATION
EXISTING SECTION VIEW
MECHANICAL DEMOLITION

WBS NUMBER	FOR CITY OF HOUSTON USE ONLY
R-000267-0173-4	HOUSTON PUBLIC WORKS ACCEPTED AND FILED 82825 CITY DRAWING NUMBER Approval Date 08/14/26 HOUSTON TX
DRAWING SCALE	
Scale 1"=2'	
CITY OF HOUSTON PM	
N.K. NUPUR KRISHNAN, PE	
F1M53	SHEET NO. 220 OF 274

0 1 2 3 ORIGINAL SCALE IN INCHES FOR REDUCED PLANS

FILE NAME:
PLOTTED ON:

P:\Code\2024\24013 - Hatch - COH FY20 Lift Stations\CAD_DWG\LIFT STATIONS MECHANICAL DEMOLITION PLAN\3-SYNOTT RD #1\LS-SYNOTT RD #1 10 2025.dwg

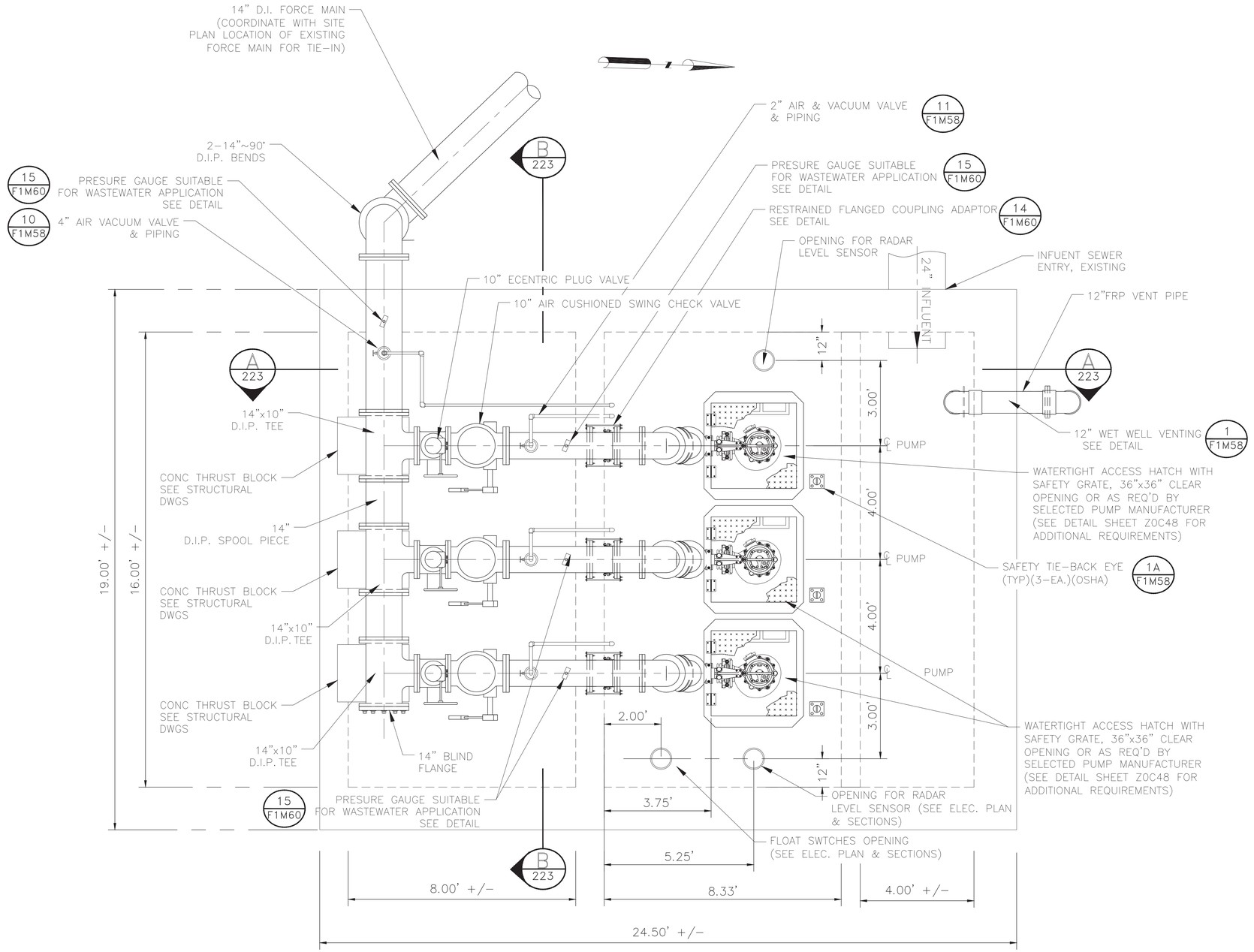

PLAN VIEW – GRADE

NOTES:

1. CONTRACTOR TO VERIFY DIMENSIONS REQUIRED TO INSTALL AND OPERATE VALVES.
2. SEE DETAIL AND STRUCTURAL DRAWINGS FOR DIMENSIONS AND INFORMATION NOT SHOWN.
3. CONTRACTOR TO CONFIRM SIZE AND LOCATION OF THE WET WELL HATCHES PER HATCH AND PUMP MANUFACTURER'S REQUIREMENTS.
4. PUMP AND ANCHOR BOLTS ARE TO BE ADHESIVE TYPE, AND EMBEDDED IN THE CONCRETE SLAB. CONTRACTOR TO SUBMIT DESIGN OF PUMP ANCHOR BOLTS AND PATTERN, INCLUDING CALCULATIONS, DURING SHOP DRAWING SUBMISSION.
5. CONTRACTOR TO PROVIDE ADHESIVE ANCHORS IN LIEU OF WEDGE ANCHORS FOR ALL SUBMERGED CONDITIONS AND SUBMIT DESIGN OF ANCHOR BOLTS DURING SHOP DRAWING SUBMISSION.
6. ALL PIPING IN THE WET WELL SHALL BE FLANGED. NO FLANGED COUPLING ADAPTORS, OR VICTAULIC STYLE COUPLINGS SHALL BE PERMITTED INSIDE OF THE WET WELL.
7. INSTALL PLUG VALVES TO OPEN UPWARD AND TO CLOSE TO A SEATING POSITION.
8. INSTALL CHECK VALVES SO THAT THE WEIGHT LEVER POSITION IS APPROXIMATELY 45° BELOW THE VALVE HORIZONTAL CENTER LINE IN THE CLOSE POSITION; AND APPROXIMATELY 45° ABOVE THE HORIZONTAL CENTER LINE IN THE FULL OPEN POSITION.
9. THE ACCESS HATCHES MUST BE WATERTIGHT AND PAINTED FOREST GREEN. THE SAFETY GRATING MUST BE PROVIDED WITH A SAFETY ORANGE POWDER COAT FINISH. COATING REQUIREMENTS SHALL BE IN COMPLIANCE WITH SPECIFICATION REQUIREMENTS.
10. LABEL HATCHES WITH THE CORRESPONDING PUMP NUMBER AND CHECK VALVES WITH THE CORRESPONDING VALVE NUMBER USING A 12-INCH BY 12-INCH PLATE ENGRAVED WITH 6-INCH LETTERING WELDED TO THE HATCHES AND ADHERED TO THE VALVES.
11. COATINGS ARE REQUIRED BY THE CITY OF HOUSTON ON ALL VENT PIPES. COATINGS SHALL COMPLY WITH SPECIFICATIONS 02083, PARAGRAPH 2.11.C.4 AND 09901, PARAGRAPH 2.02.G.
12. PRESSURE GAUGES SHALL BE SUITABLE FOR WASTEWATER APPLICATIONS.
13. APPLY PROTECTIVE COATINGS TO PIPES, VALVES AND FITTINGS AS APPLICABLE. LABEL PIPING WITH DIRECTIONAL FLOW ARROWS IN COMPLIANCE WITH SPECIFICATION REQUIREMENTS
14. AIR RELEASE AND AIR VACUUM VALVES TO BE PROVIDED WITH STAINLESS STEEL BODIES IN COMPLIANCE WITH SPECIFICATION REQUIREMENTS.

NO.	DATE	REVISION	APP.

AMANI ENGINEERING, INC.
11011 RICHMOND AVENUE
SUITE 700
HOUSTON, TEXAS 77024
TEL: (713) 270-5700
TBPE REG. NO. F-4528
TBPELS REG. NO. 1028200

HATCH
750 TOWN & COUNTRY BLVD.
SUITE 650
HOUSTON, TEXAS 77024
P:832-930-7670
TX FIRM NUMBER: F-314

SURVEYED BY:
AMANI ENGINEERING,INC.
FB NO. P-6357

STATE OF TEXAS · DAVID L. BROWN · 48282 · REGISTERED PROFESSIONAL ENGINEER
8/11/2026

CITY OF HOUSTON

HOUSTON PUBLIC WORKS

LIFT STATION RENEWAL & REPLACEMENT PROJECT

SYNOTT RD #1 LIFT STATION
PROPOSED MECHANICAL
PLAN VIEW/GRADE

WBS NUMBER	FOR CITY OF HOUSTON USE ONLY
R-000267-0173-4	HOUSTON PUBLIC WORKS ACCEPTED AND FILED 82825 CITY DRAWING NUMBER Approval Date 08/14/26 HOUSTON TX
DRAWING SCALE	
Scale 1"=2'	
CITY OF HOUSTON PM	
N.K. NUPUR KRISHNAN, PE	
F1M54	SHEET NO. 221 OF 274

0 1 2 3 ORIGINAL SCALE IN INCHES FOR REDUCED PLANS

FILE NAME:
PLOTTED ON:

P:\Cad\2024\24013 - Hatch - COH FY20 Lift Stations\CAD_DWG\Phase II\3-Phase II SYNOTT\PHASE II LS-SYNOTT RD #1.dwg

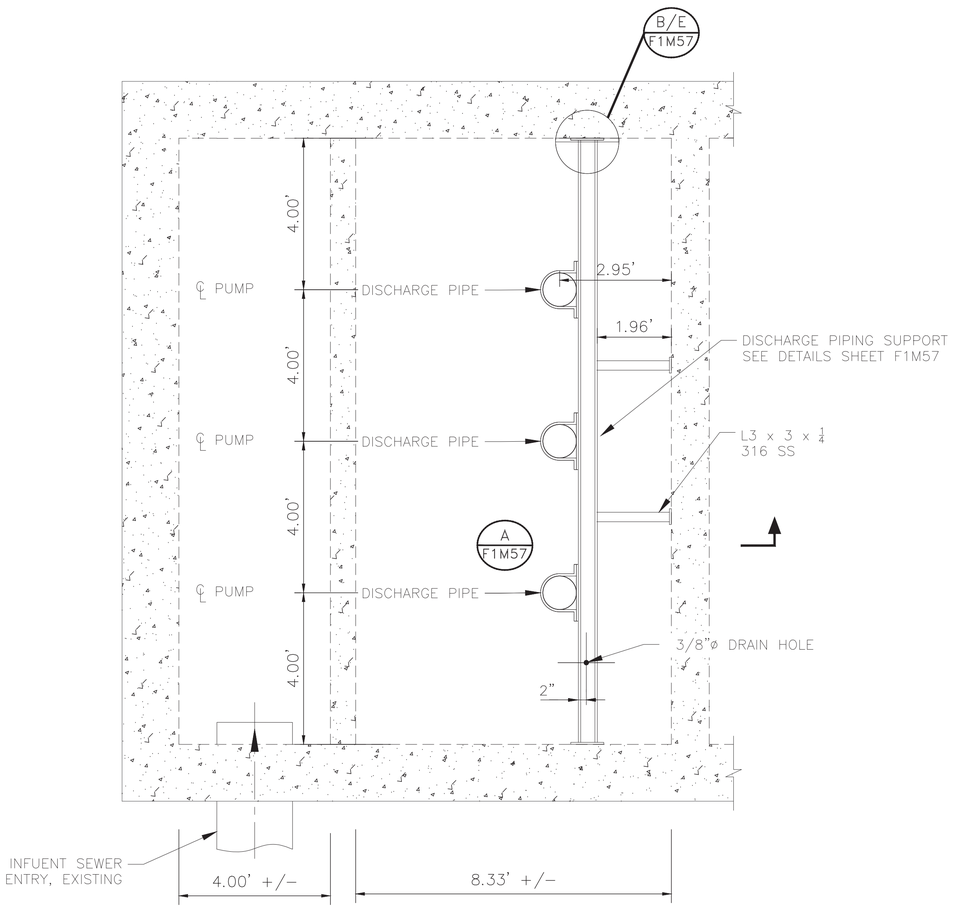

DISCHARGE PIPING SUPPORT

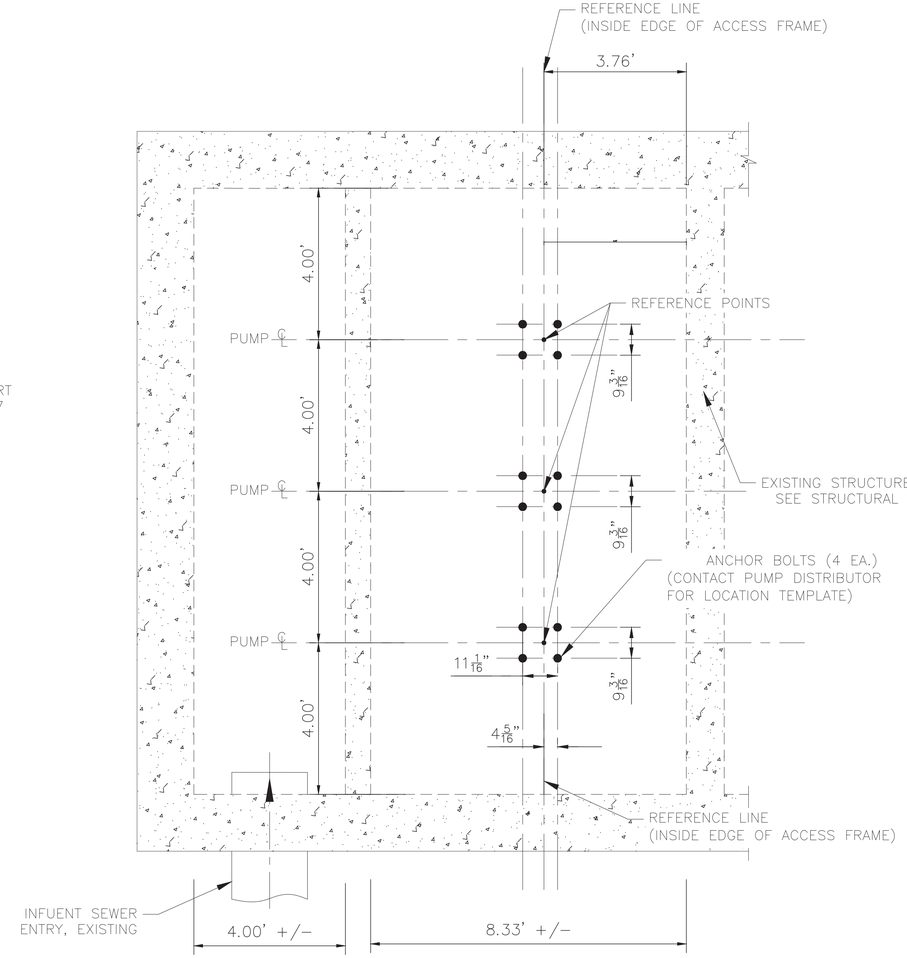

BASE SECTION

NOTES:

1. CONTRACTOR TO VERIFY DIMENSIONS REQUIRED TO INSTALL AND OPERATE VALVES.
2. SEE DETAIL AND STRUCTURAL DRAWINGS FOR DIMENSIONS AND INFORMATION NOT SHOWN.
3. CONTRACTOR TO CONFIRM SIZE AND LOCATION OF THE WET WELL HATCHES PER HATCH AND PUMP MANUFACTURER'S REQUIREMENTS.
4. PUMP AND ANCHOR BOLTS ARE TO BE ADHESIVE TYPE, AND EMBEDDED IN THE CONCRETE SLAB. CONTRACTOR TO SUBMIT DESIGN OF PUMP ANCHOR BOLTS AND PATTERN, INCLUDING CALCULATIONS, DURING SHOP DRAWING SUBMISSION.
5. CONTRACTOR TO PROVIDE ADHESIVE ANCHORS IN LIEU OF WEDGE ANCHORS FOR ALL SUBMERGED CONDITIONS AND SUBMIT DESIGN OF ANCHOR BOLTS DURING SHOP DRAWING SUBMISSION.
6. ALL PIPING IN THE WET WELL SHALL BE FLANGED. NO FLANGED COUPLING ADAPTORS, OR VICTAULIC STYLE COUPLINGS SHALL BE PERMITTED INSIDE OF THE WET WELL.
7. INSTALL PLUG VALVES TO OPEN UPWARD AND TO CLOSE TO A SEATING POSITION.
8. INSTALL CHECK VALVES SO THAT THE WEIGHT LEVER POSITION IS APPROXIMATELY 45° BELOW THE VALVE HORIZONTAL CENTER LINE IN THE CLOSE POSITION: AND APPROXIMATELY 45° ABOVE THE HORIZONTAL CENTER LINE IN THE FULL OPEN POSITION.
9. THE ACCESS HATCHES MUST BE WATERTIGHT AND PAINTED FOREST GREEN. THE SAFETY GRATING MUST BE PROVIDED WITH A SAFETY ORANGE POWDER COAT FINISH. COATING REQUIREMENTS SHALL BE IN COMPLIANCE WITH SPECIFICATION REQUIREMENTS.
10. LABEL HATCHES WITH THE CORRESPONDING PUMP NUMBER AND CHECK VALVES WITH THE CORRESPONDING VALVE NUMBER USING A 12-INCH BY 12-INCH PLATE ENGRAVED WITH 6-INCH LETTERING WELDED TO THE HATCHES AND ADHERED TO THE VALVES.
11. UV PROTECTIVE COATINGS ARE REQUIRED BY THE CITY OF HOUSTON ON ALL VENT PIPES.
12. PRESSURE GAUGES SHALL BE SUITABLE FOR WASTEWATER APPLICATIONS.
13. APPLY PROTECTIVE COATINGS TO PIPES, VALVES AND FITTINGS AS APPLICABLE. LABEL PIPING WITH DIRECTIONAL FLOW ARROWS IN COMPLIANCE WITH SPECIFICATION REQUIREMENTS
14. AIR RELEASE AND AIR VACUUM VALVES TO BE PROVIDED WITH STAINLESS STEEL BODIES IN COMPLIANCE WITH SPECIFICATION REQUIREMENTS.

NO.	DATE	REVISION	APP.

AMANI ENGINEERING, INC.
11011 RICHMOND AVENUE
SUITE 700
HOUSTON, TEXAS 77024
TEL: (713) 270-5700
TBPE REG. NO. F-4528
TBPELS REG. NO. 1028200

HATCH
750 TOWN & COUNTRY BLVD.
SUITE 650
HOUSTON, TEXAS 77024
P:832-930-7670
TX FIRM NUMBER: F-314

SURVEYED BY:
AMANI ENGINEERING,INC.
FB NO. P-6357

REGISTERED PROFESSIONAL ENGINEER
DAVID L. BROWN
48282
REGISTERED
8/11/2026

CITY OF HOUSTON
HOUSTON PUBLIC WORKS

LIFT STATION RENEWAL & REPLACEMENT PROJECT

SYNOTT RD #1 LIFT STATION
PROPOSED MECHANICAL TOP VIEW/BASE SECTION

WBS NUMBER	FOR CITY OF HOUSTON USE ONLY
R-000267-0173-4	HOUSTON PUBLIC WORKS ACCEPTED AND FILED 82825 CITY DRAWING NUMBER Approval Date 08/14/26 HOUSTON TX
DRAWING SCALE	
Scale 1"=2'	
CITY OF HOUSTON PM	
N.K. NUPUR KRISHNAN, PE	
SHEET NO. 222 OF 274	

F1M55

FILE NAME:
PLOTTED ON:

0 1 2 3 ORIGINAL SCALE IN INCHES FOR REDUCED PLANS

P:\Cordi\2024\24013 - Hatch - COH FY20 Lift Stations\CAD_DWG\Phase II\3-Phase II SYNOTT\PHASE II LS-SYNOTT RD #1.dwg

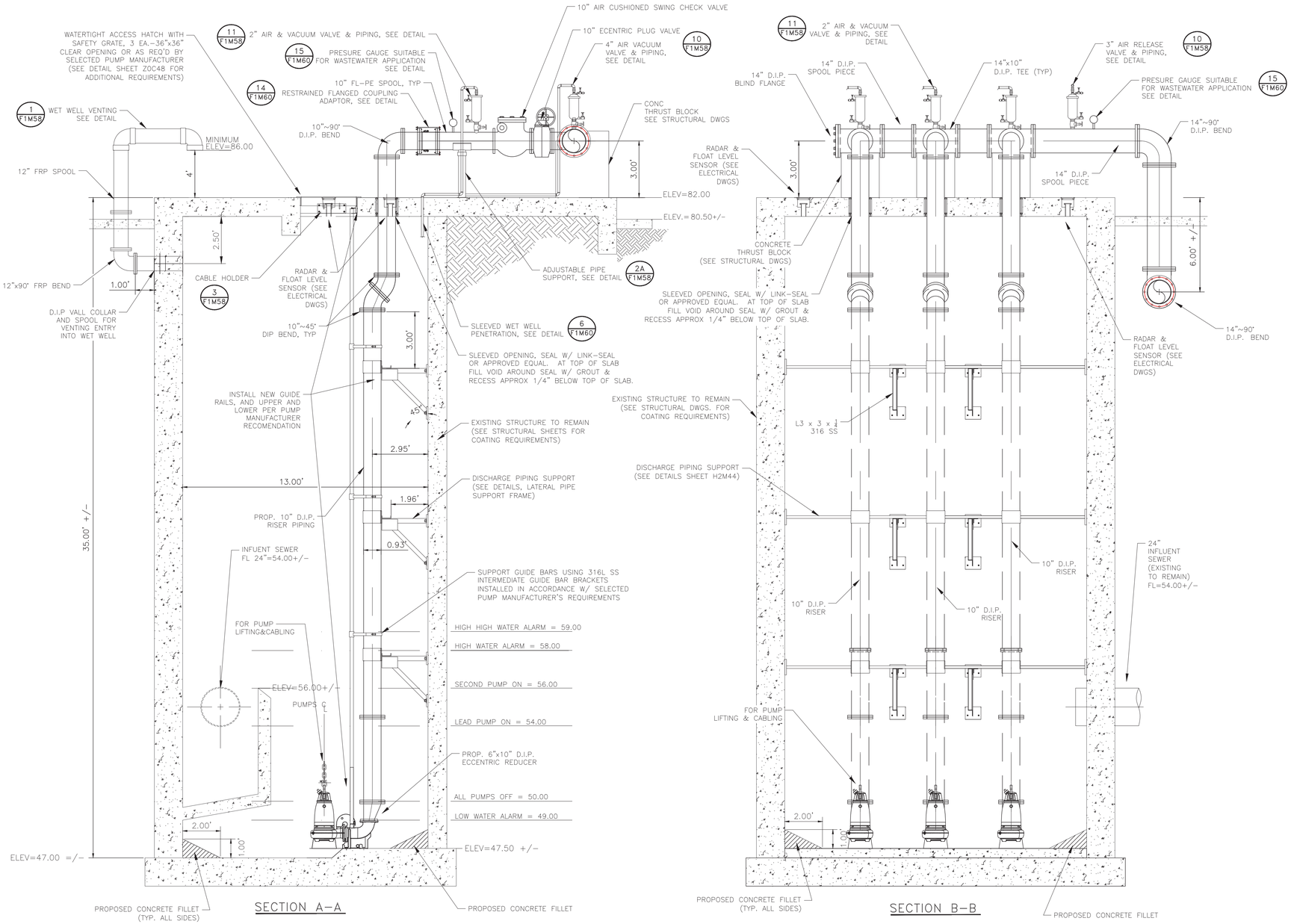

NO.	DATE	REVISION	APP.

AMANI ENGINEERING, INC.
11011 RICHMOND AVENUE
SUITE 700
HOUSTON, TEXAS 77024
TEL: (713) 270–5700
TBPE REG. NO. F–4528
TBPELS REG. NO. 1028200

HATCH
750 TOWN & COUNTRY BLVD.
SUITE 650
HOUSTON, TEXAS 77024
P:832–930–7670
TX FIRM NUMBER: F–314

SURVEYED BY:
AMANI ENGINEERING,INC.
FB NO. P–6357

STATE OF TEXAS
DAVID L. BROWN
48282
REGISTERED PROFESSIONAL ENGINEER
8/11/2026

CITY OF HOUSTON
HOUSTON PUBLIC WORKS

LIFT STATION RENEWAL & REPLACEMENT PROJECT

SYNOTT RD #1 LIFT STATION
PROPOSED MECHANICAL
ELEVATION SECTIONS

WBS NUMBER
R–000267–0173–4
DRAWING SCALE
Scale 1"=3'
CITY OF HOUSTON PM
N.K. NUPUR KRISHNAN, PE

FOR CITY OF HOUSTON USE ONLY

HOUSTON PUBLIC WORKS
ACCEPTED AND FILED
82825
CITY DRAWING NUMBER
Approval Date 08/14/26
HOUSTON TX

F1M56 | SHEET NO. 223 OF 274

FILE NAME:
PLOTTED ON:

0 1 2 3 ORIGINAL SCALE IN INCHES FOR REDUCED PLANS

P:\Cad\2024\24013 – Hatch – COH FY20 Lift Stations\CAD_DWG\Phase II\3–Phase II SYNOTT\PHASE II LS–SYNOTT RD #1.dwg

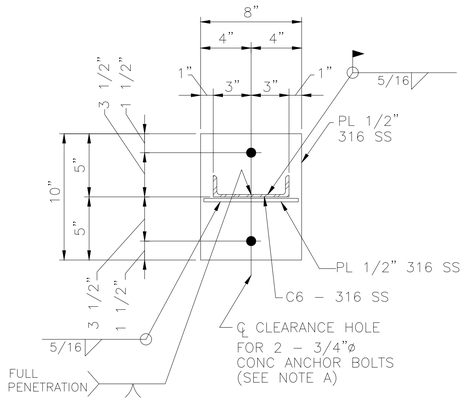

DETAIL 'B'

N.T.S.

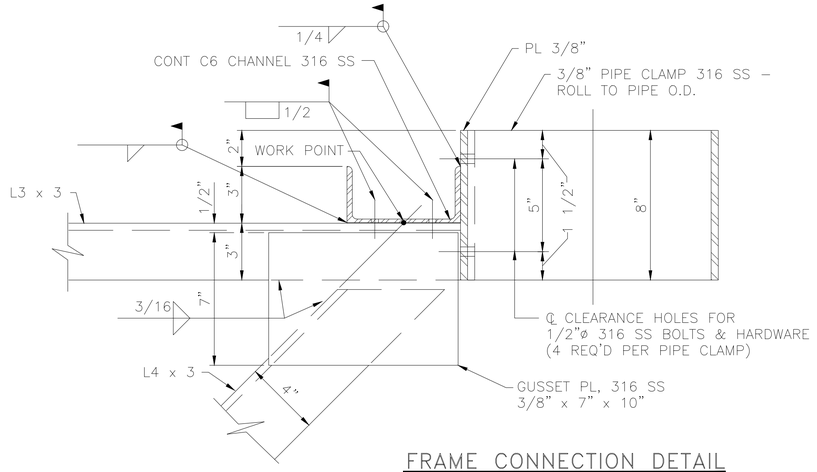

FRAME CONNECTION DETAIL

N.T.S.

NOTES:

A. CONCRETE ANCHOR BOLTS SHALL HAVE 6" MINIMUM EMBEDMENT AND SHALL BE TYPE 316 STAINLESS STEEL, PER SPECIFICATIONS.

B. SEE STATION AND STRUCTURAL DRAWINGS FOR DIMENSIONS AND INFORMATION NOT SHOWN.

C. DRILL 3/8"ø HOLES, 1" OFF CENGER OF C6 AT MIDSPAN BETWEEN LATERAL PIPE SUPPORTS TO ALLOW FOR DRAINAGE. 3 HOLES PER CHANNEL WHERE 2 LATERAL SUPPORTS REQUIRED; 2 HOLES PER CHANNEL WHERE 1 LATERAL SUPPORT REQUIRED.

D. SET 1/4" NEOPRENE GASKET ON WALL SURFACE IN SIKA 1A (OR EQUAL) SEALANT.

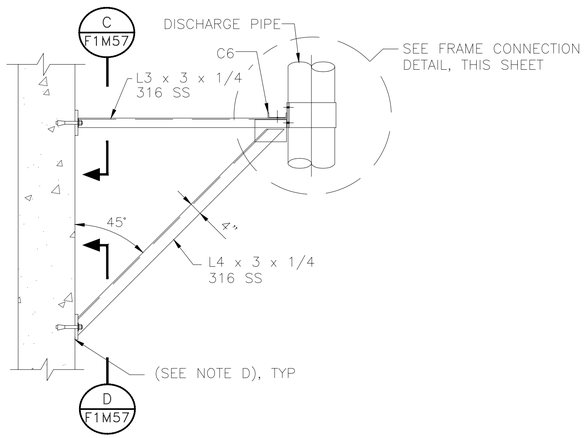

LATERAL PIPE SUPPORT FRAME

N.T.S.

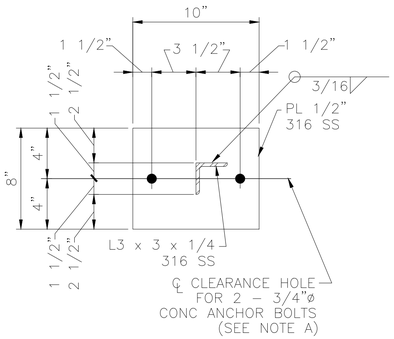

DETAIL 'C'

N.T.S.

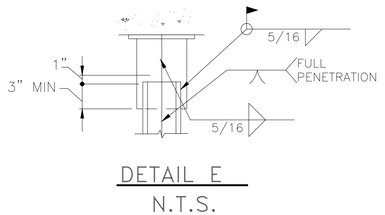

DETAIL E

N.T.S.

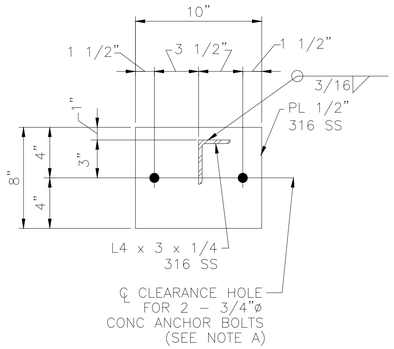

DETAIL 'D'

N.T.S.

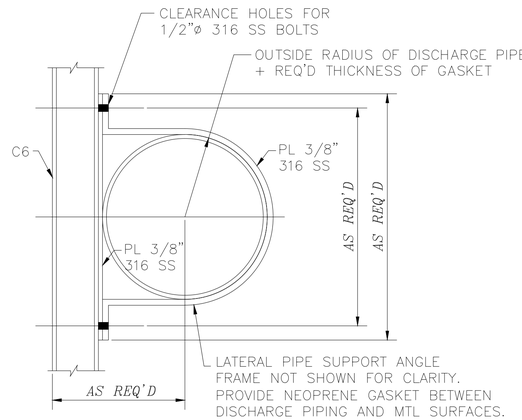

PIPE CLAMP DETAIL

N.T.S.

NO.	DATE	REVISION	APP.

AMANI ENGINEERING, INC.
11011 RICHMOND AVENUE
SUITE 700
HOUSTON, TEXAS 77024
TEL: (713) 270-5700
TBPE REG. NO. F-4528
TBPELS REG. NO. 1028200

HATCH
750 TOWN & COUNTRY BLVD.
SUITE 650
HOUSTON, TEXAS 77024
P:832-930-7670
TX FIRM NUMBER: F-314

SURVEYED BY:
AMANI ENGINEERING,INC.
FB NO. P-6357

STATE OF TEXAS
DAVID L BROWN
48282
REGISTERED
PROFESSIONAL
8/11/2026

CITY OF HOUSTON

HOUSTON PUBLIC WORKS

LIFT STATION RENEWAL & REPLACEMENT PROJECT

SYNOTT RD #1 LIFT STATION
PROPOSED MECHANICAL DETAILS

WBS NUMBER	FOR CITY OF HOUSTON USE ONLY
R-000267-0173-4	HOUSTON PUBLIC WORKS ACCEPTED AND FILED 82825 CITY DRAWING NUMBER Approval Date 08/14/26 HOUSTON TX
DRAWING SCALE	
Scale N.T.S.	
CITY OF HOUSTON PM	
N.K. NUPUR KRISHNAN, PE	
F1M57	SHEET NO. 224 OF 274

FILE NAME:
PLOTTED ON:

0 1 2 3 ORIGINAL SCALE IN INCHES FOR REDUCED PLANS

P:\Cad\2024\24013 - Hatch - COH FY20 Lift Stations\CAD_DWG\Phase II\3-Phase II SYNOTT\PHASE II LS-SYNOTT RD #1.dwg

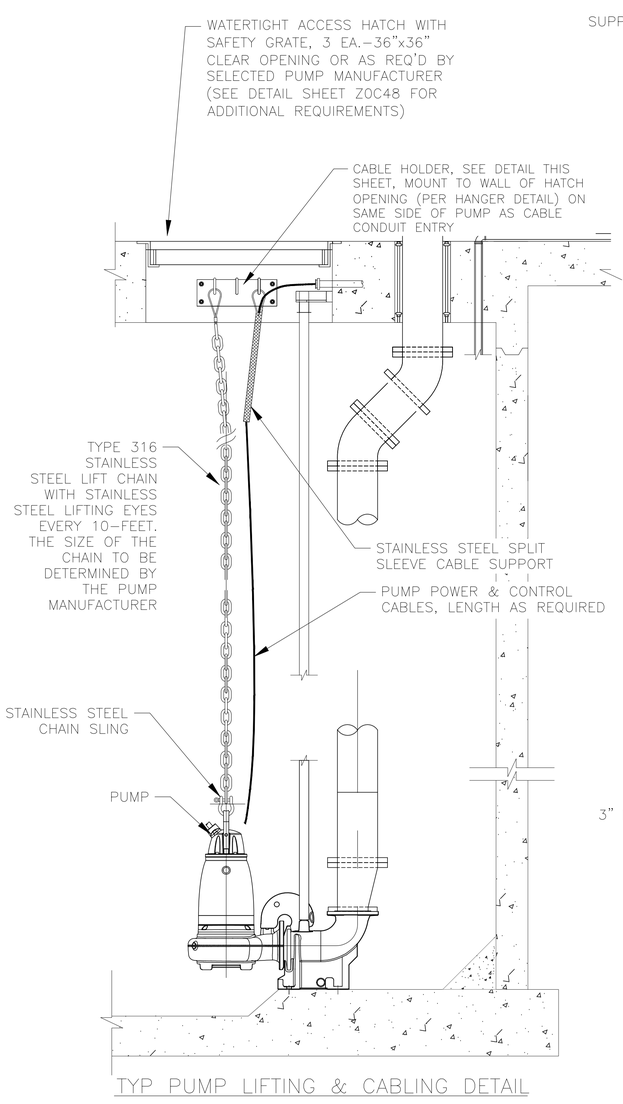

TYP PUMP LIFTING & CABLING DETAIL

DETAIL 3
N.T.S.

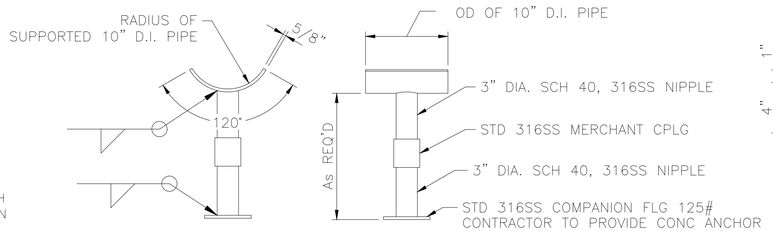

TYP ADJUSTABLE PIPE SUPPORT

DETAIL 2A / F1M58
N.T.S.

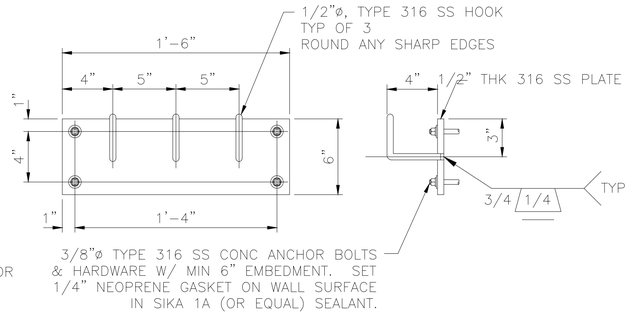

TYPICAL CABLE HOLDER ASSY

DETAIL 3A / F1M58
N.T.S.

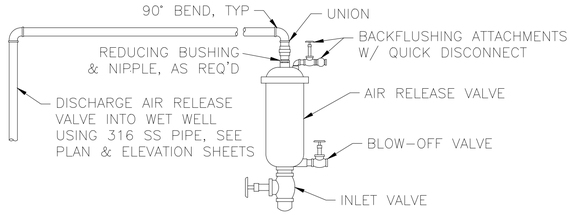

NOTE: PROVIDE STAINLESS STEEL VALVE BODY AND FITTINGS AS MAY BE REQUIRED BY SPECIFICATIONS

TYPICAL AIR RELEASE VALVE ASSY

DETAIL 10 / F1M58
N.T.S.

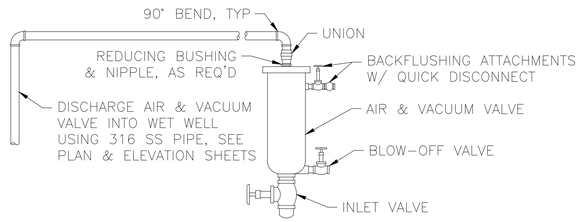

NOTE: PROVIDE STAINLESS STEEL VALVE BODY AND FITTINGS AS MAY BE REQUIRED BY SPECIFICATIONS

TYPICAL AIR & VACUUM VALVE ASSY

DETAIL 11 / F1M58
N.T.S.

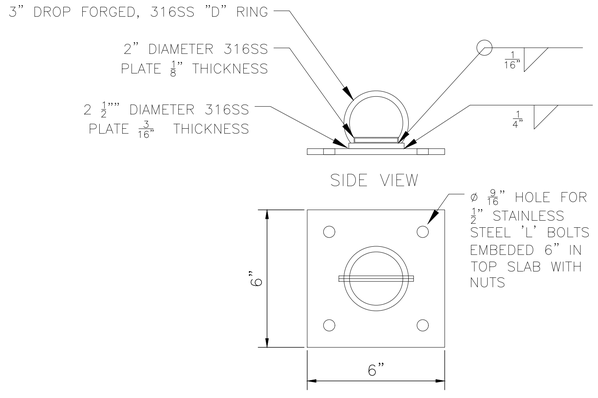

CB SERIES FALL PROTECTION CB–1B BOLT ANCHORED

DETAIL 1A / F1M58
N.T.S.

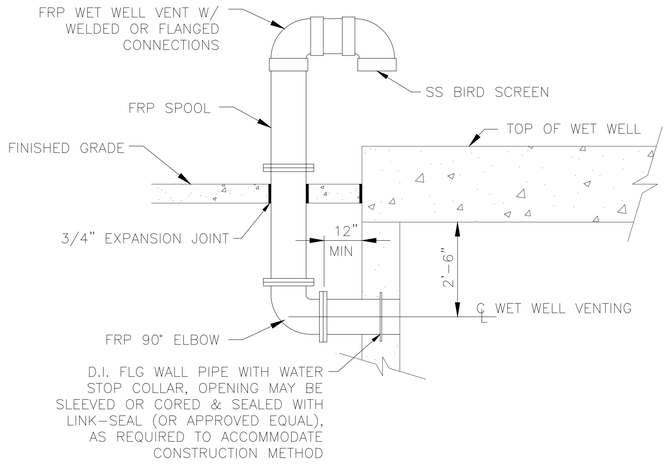

TYPICAL HIGH PROFILE
WET WELL VENTING INSTALLATION

DETAIL 1 / F1M58
N.T.S.

NO.	DATE	REVISION	APP.

AMANI ENGINEERING, INC.
11011 RICHMOND AVENUE
SUITE 700
HOUSTON, TEXAS 77024
TEL: (713) 270–5700
TBPE REG. NO. F–4528
TBPELS REG. NO. 1028200

HATCH
750 TOWN & COUNTRY BLVD.
SUITE 650
HOUSTON, TEXAS 77024
P:832–930–7670
TX FIRM NUMBER: F–314

SURVEYED BY:
AMANI ENGINEERING,INC.
FB NO. P–6357

STATE OF TEXAS
DAVID L. BROWN
48282
REGISTERED PROFESSIONAL ENGINEER
8/11/2026

CITY OF HOUSTON
HOUSTON PUBLIC WORKS

LIFT STATION RENEWAL & REPLACEMENT PROJECT

SYNOTT RD #1 LIFT STATION
PROPOSED MECHANICAL DETAILS

WBS NUMBER	FOR CITY OF HOUSTON USE ONLY
R–000267–0173–4	HOUSTON PUBLIC WORKS ACCEPTED AND FILED 82825 CITY DRAWING NUMBER Approval Date 08/14/26 HOUSTON TX
DRAWING SCALE	
Scale N.T.S.	
CITY OF HOUSTON PM	
N.K. NUPUR KRISHNAN, PE	
SHEET NO. 225 274	

F1M58

FILE NAME:
PLOTTED ON:

ORIGINAL SCALE IN INCHES
FOR REDUCED PLANS
0 1 2 3

P:\Cad\2024\24013 - Hatch - COH FY26 Lift Stations\CAD_DWG\Phase II\3-Phase II SYNOTT\PHASE II LS-SYNOTT RD #1.dwg

SYNOTT ROAD #1
LIFT STATION

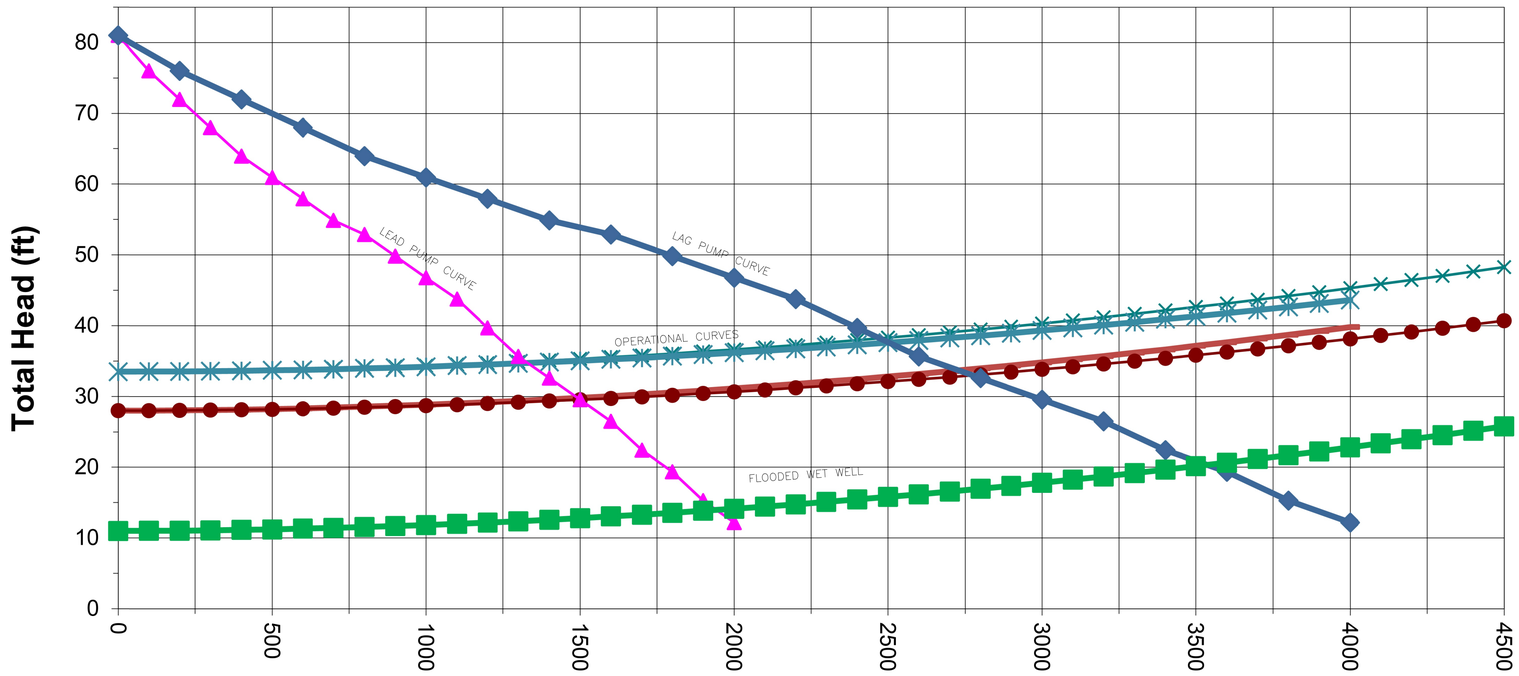

NOTE: ALL PUMPS TO BE PROVIDED WITH COOLING JACKETS TO ALLOW LOWERING WET WELL LEVEL TO "ALL PUMPS OFF" SETTING

PUMP DATA TABLE

PUMP CHARACTERISTICS	PUMP NO. 1	PUMP NO. 2	PUMP NO. 3
MOTOR DATA NOMINAL SIZE (HP) MAX SPEED (RPM)	17 1800	17 1800	17 1800
SOLIDS PASSAGE MIN SPHERE (IN)	3	3	3
CAPACITY (GPM) DESIGN RUNOUT	1315 2100	1315 2100	1315 2100
DISCHARGE HEAD (FT) DESIGN RUNOUT SHUT OFF	34 10 78	34 10 78	34 10 78
EFFICIENCY (%) DESIGN	73	73	73
NPSHR (FT) DESIGN RUNOUT	23.2 40	23.2 40	23.2 40
PUMP CYCLE TIME	6+	6+	6+
CUMULATIVE CAPACITY* (GPM)	1300	2750	STANDBY

* CUMMULATIVE CAPACITY IS THE DUTY POINT WHEN ALL PUMPS IN THE OPERATIONAL CYCLE ARE BEING CALLED.

STATION OPERATION TABLES

	RISING LEVEL CYCLE		
WATER LEVEL DEPTH	WATER LEVEL ELEVATION	ACTION	PUMP(S) IN OPERATION
3.00	50.00	PUMPS OFF LEVEL – NO ACTION	ALL PUMPS ARE OFF
7.00	54.00	LEAD PUMP TURNS ON	LEAD PUMP ON
9.00	56.00	SECOND PUMP TURNS ON	LEAD AND SECOND PUMPS ON
11.00	58.00	HIGH WATER ALARM ON	HIGH WATER ALARM SOUND
12.00	59.00	HIGH HIGH WATER ALARM (FLOAT ON LEVEL)	FIRM PUMPS ON (FLOATS ON LEVEL)
	FALLING LEVEL CYCLE		
WATER LEVEL DEPTH	WATER LEVEL ELEVATION	ACTION	PUMP(S) IN OPERATION
12.00	59.00	(FLOAT OFF LEVEL)	FIRM PUMPS OFF (FLOAT OFF LEVEL)
11.00	58.00	HIGH WATER LEVEL ALARM OFF	LEAD AND SECOND PUMPS ON
9.00	56.00	LEAD PUMP TURNS OFF	SECOND PUMP ON
3.00	50.00	SECOND PUMP TURNS OFF	ALL PUMPS OFF – STANDBY PUMP SWITCHES TO LEAD PUMP
2.00	49.00	LOW LEVEL ALARM	–

NO.	DATE	REVISION	APP.

AMANI ENGINEERING, INC.
11011 RICHMOND AVENUE
SUITE 700
HOUSTON, TEXAS 77024
TEL: (713) 270-5700
TBPE REG. NO. F-4528
TBPELS REG. NO. 1028200

HATCH
750 TOWN & COUNTRY BLVD.
SUITE 650
HOUSTON, TEXAS 77024
P:832-930-7670
TX FIRM NUMBER: F-314

SURVEYED BY:
AMANI ENGINEERING,INC.
FB NO. P-6357

STATE OF TEXAS
DAVID L. BROWN
48282
REGISTERED
PROFESSIONAL ENGINEER
8/11/2026

CITY OF HOUSTON
HOUSTON PUBLIC WORKS

LIFT STATION RENEWAL & REPLACEMENT PROJECT

SYNOTT RD #1 LIFT STATION
PUMP CURVE AND OPERATIONAL SETTINGS

WBS NUMBER	FOR CITY OF HOUSTON USE ONLY
R-000267-0173-4	HOUSTON PUBLIC WORKS ACCEPTED AND FILED 82825 CITY DRAWING NUMBER Approval Date 08/14/26 HOUSTON TX
DRAWING SCALE	
Scale N.T.S.	
CITY OF HOUSTON PM	
N.K. NUPUR KRISHNAN, PE	
F1M59	SHEET NO. 226 OF 274

FILE NAME:
PLOTTED ON:

0 1 2 3 ORIGINAL SCALE IN INCHES FOR REDUCED PLANS

P:\Coda\v2024\24013 - Hatch - COH FY26 Lift Stations\C4D_DWG\Phase II\3-Phase II SYNOTT\PHASE II LS-SYNOTT RD #1.dwg

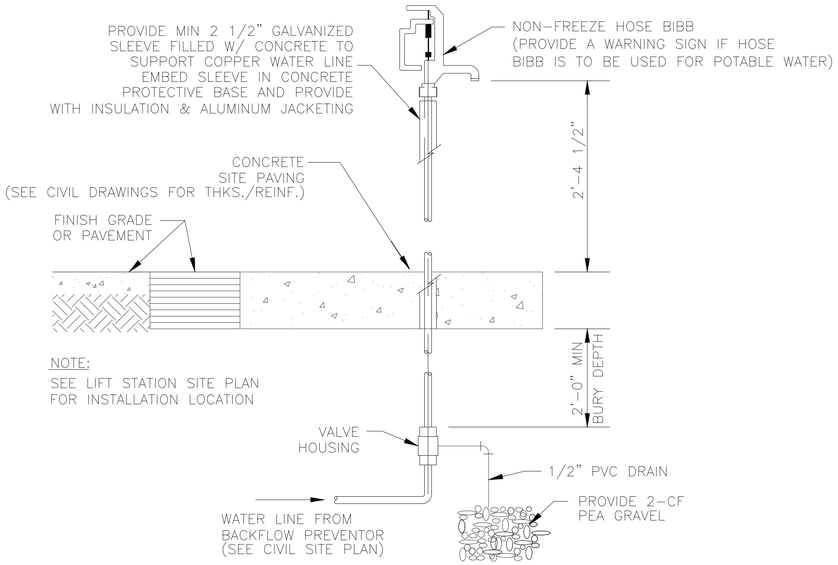

NON-FREEZE HOSE BIBB DETAIL

N.T.S.

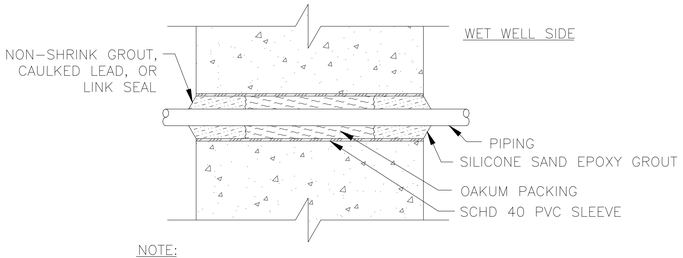

NOTE:
SLEEVED WET WELL PENETRATION IS NOT TO BE USED FOR CONDUIT INSTALLATION. SEE ELECTRICAL DETAIL SHEETS FOR CONDUIT PENETRATIONS.

SLEEVED WET WELL PENETRATION FOR PIPING 4"ø & SMALLER

DETAIL 6 / F1M60

N.T.S.

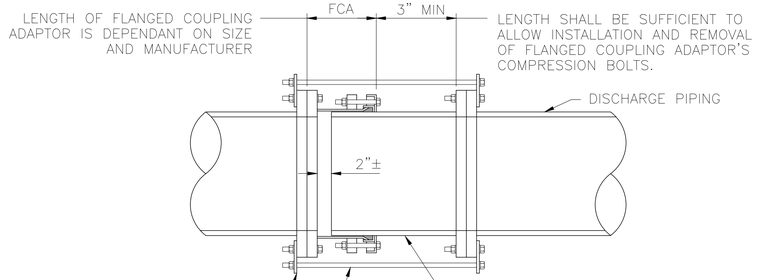

NOTES:

1. PROVIDE A NUMBER OF TIE RODS EQUAL TO 1/2 THE NUMBER OF FLANGE BOLTS. EVENLY SPACE INSTALLATION OF TIE RODS. DIAMETER OF TIE RODS TO BE EQUAL TO THE DIAMETER OF FLANGE BOLTS. LENGTH OF TIE RODS TO BE DETERMINED BY CONTRACTOR BASED ON SIZE AND MANUFACTURER OF FLANGED COUPLING ADAPTOR AND FINAL LENGTH OF SPOOL PIECE.
2. PROVIDE 316 SS TAB FOR ATTACHMENT OF TIE RODS. SIZE TO BE DETERMINED BY CONTRACTOR.
3. CONTRACTOR TO SUBMIT DETAILS DURING SHOP DRAWING SUBMISSION.
4. ALL HARDWARE SHALL BE 316 STAINLESS STEEL. TIE RODS SHOULD BE THREADED.
5. THIS RESTRAINT DOES NOT REPLACE THRUST BLOCKS TO BE PROVIDED AT OTHER LOCATIONS.

FLANGED COUPLING ADAPTOR RESTRAINT DETAIL

DETAIL 14 / F1M60

N.T.S.

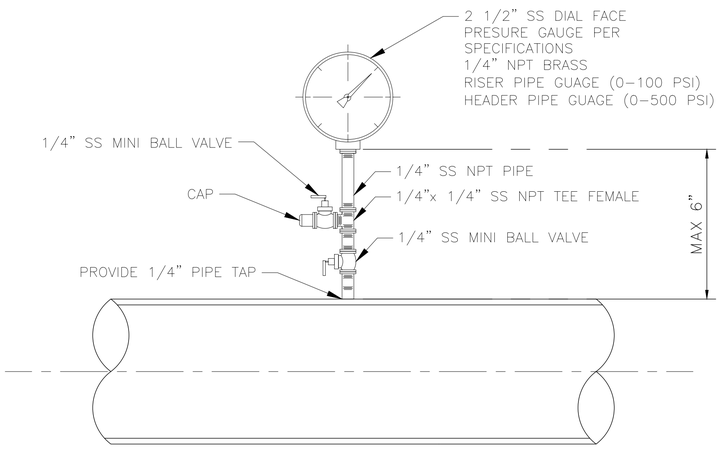

NOTE: ALL FITTINGS SHALL BE STAINLESS STEEL (316)

PRESSURE GAUGE DETAIL

DETAIL 15 / F1M60

N.T.S.

NO.	DATE	REVISION	APP.

AMANI ENGINEERING, INC.
11011 RICHMOND AVENUE
SUITE 700
HOUSTON, TEXAS 77024
TEL: (713) 270-5700
TBPE REG. NO. F-4528
TBPELS REG. NO. 1028200

HATCH
750 TOWN & COUNTRY BLVD.
SUITE 650
HOUSTON, TEXAS 77024
P:832-930-7670
TX FIRM NUMBER: F-314

SURVEYED BY:
AMANI ENGINEERING,INC.
FB NO. P-6357

STATE OF TEXAS
DAVID L. BROWN
48282
REGISTERED
PROFESSIONAL
LAND SURVEYOR
8/11/2026

CITY OF HOUSTON
HOUSTON PUBLIC WORKS

LIFT STATION RENEWAL & REPLACEMENT PROJECT

SYNOTT RD #1 LIFT STATION
PROPOSED MECHANICAL DETAILS

WBS NUMBER
R-000267-0173-4
DRAWING SCALE
Scale N.T.S.
CITY OF HOUSTON PM
N.K. NUPUR KRISHNAN, PE
SHEET NO. 227 OF 274

FOR CITY OF HOUSTON USE ONLY

HOUSTON PUBLIC WORKS
ACCEPTED AND FILED
82825
CITY DRAWING NUMBER
Approval Date 08/14/26
HOUSTON TX

F1M60

FILE NAME:
PLOTTED ON:

0 1 2 3 ORIGINAL SCALE IN INCHES FOR REDUCED PLANS

P:\Cad\2024\24013 - Hatch - COH FY20 Lift Stations\CAD_DWG\Phase II\3-Phase II SYNOTT PHASE II LS-SYNOTT RD #1.dwg

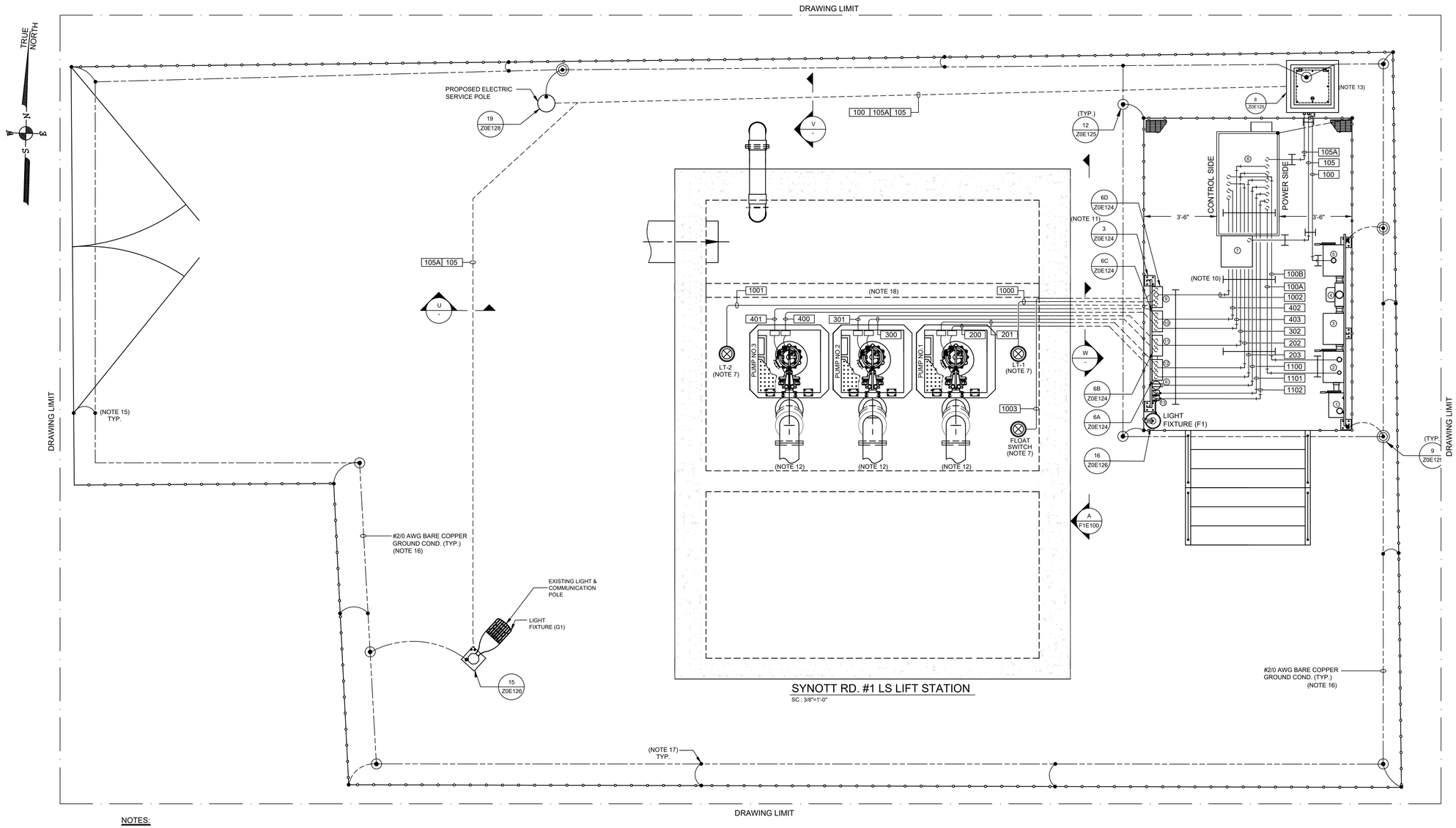

NOTES:

1. GROUNDING SHALL BE PER N.E.C. MINIMUM REQUIREMENTS.
2. THE ELECTRICAL INSTALLATION WITHIN THE WET WELL SHALL BE EXPLOSION PROOF IN ACCORDANCE WITH ARTICLE 510 OF THE NEC FOR CLASS I, DIVISION 1, GROUP C & D.
3. WHERE JUNCTION BOXES ARE SHOWN, THEY SHALL BE USED FOR PULLING OR TERMINATION PURPOSES ONLY. SPLICES WILL NOT BE ALLOWED EXCEPT AS PROVIDED BY NOTE 5 AND AT LIGHTING AND RECEPTACLE TERMINATIONS.
4. FOR MOTOR FEEDER AND CONTROL CABLES, INSTALL TYPE CSBE CABLE SEALING FITTING AT JUNCTION BOX ENTRANCE AND EXPLOSION PROOF SEAL IN CONDUITS TO CONTROL BUILDING OR PANEL.
5. TERMINATE PUMP POWER & CONTROL CONDUITS WITH CSBE SEAL. ATTACH STAINLESS STEEL SPLIT SLEEVE CABLE SUPPORT ON EACH POWER AND CONTROL CABLE.
6. ALL PUMP POWER AND CONTROL CABLE LEADS MUST BE THE SAME LENGTH REGARDLESS OF PUMP LOCATION FROM TERMINAL/JUNCTION BOX.
7. LEVEL TRANSMITTERS AND FLOAT SWITCH SHOWN IN APPROXIMATE LOCATION. ACTUAL LOCATION SHALL FIELD VERIFY.
8. INSIDE WET WELL IS CLASSIFIED AS CLASS I, DIVISION 1. OUTSIDE WET WELL WITHIN 5 FEET OF WET WELL OPENINGS ARE CLASSIFIED AS CLASS I, DIVISION 2.
9. NEW INSTRUMENT TO BE INSTALLED IN THE SAME AREA AS INSTRUMENT REMOVED.
10. CONDUITS INSTALLED UNDER THE PLATFORM AND FIXED TO UNISTRUT SUPPORT.
11. THE JUNCTION BOX RACK MUST BE AT LEAST 6' WIDE.
12. FOR MECHANICAL PLAN VIEW, SEE DRAWING No. F1M54.
13. BELOW SURFACE CONDUIT RUNS SHALL HAVE TOTAL BENDS EQUAL TO OR LESS THAN 270 DEGREES. INSTALL HANDHOLES AT GRADE LEVEL WHERE NECESSARY.
14. GROUND FENCE USING #2/0 BARE COPPER CONDUCTOR AT FOUR CORNERS AND INTERMEDIATE POSTS AT INTERVALS NOT TO EXCEED 50 FEET.
15. PROVIDE FLEXIBLE BONDING JUMPERS ACROSS ALL GATE HINGES TO MAINTAIN CONTINUOUS GROUNDING.
16. GROUNDING LOOP SHALL BE BURIED 24" BELOW FINISHED GRADE.
17. EXOTHERMIC (THERMOWELD) CONNECTION OF #2/0 BARE COPPER GROUND CONDUCTOR TO REBAR.
18. CONDUIT WILL BE EMBEDDED IN THE TOP CONCRETE SLAB, NOT ON TOP OR BELOW THE SLAB.

No.	DESCRIPTION
1	GENERATOR FUSED DISCONNECT
2	MANUAL TRANSFER SWITCH
3	SERVICE DISCONNECT SWITCH
4	UTILITY METER
5	METER DISCONNECT SWITCH
6	WEATHER PROOF GFI
7	PPU-AC PANEL
8	POWER & CONTROL CABINET
9	LEVEL TRANSMITTER J-BOX
10	PUMP NO.3 J-BOX
11	PUMP NO.2 J-BOX
12	PUMP NO.1 J-BOX
13	LIGHTING SWITCH

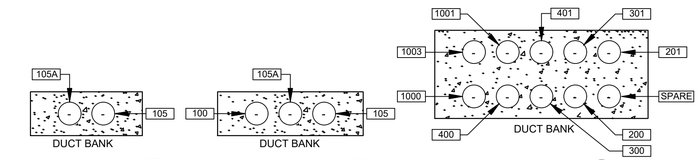

REVISION	
DATE	
APP.	

HATCH
750 TOWN & COUNTRY BLVD
SUITE 650
HOUSTON, TX 77024
P: 832-930-7670
TX FIRM NUMBER: F-314

SURVEYED BY:
AMANI ENGINEERING, INC.
FB NO. P-6357

STATE OF TEXAS
GUY N SEVERN
105809
LICENSED PROFESSIONAL ENGINEER
7/21/2026

CITY OF HOUSTON
HOUSTON PUBLIC WORKS

LIFT STATION RENEWAL & REPLACEMENT PROJECT
SYNOTT RD. #1 LS

ELECTRICAL SITE PLAN

WBS NUMBER	FOR CITY OF HOUSTON USE ONLY
R-000267-0173-4	HOUSTON PUBLIC WORKS ACCEPTED AND FILED 82825 CITY DRAWING NUMBER Approval Date 08/14/26 HOUSTON TX
DRAWING SCALE	
AS NOTED	
CITY OF HOUSTON PM	
NUPUR KRISHNAN P.E. N.K.	
SHEET NO. 227A OF 274	

F1E99

PLOTTED: 8/11/2026 12:01 PM
PLOT STYLE: COH.ctb
FILE PATH: \\wsppplot01\d$\Global ProjectWise Plotting - WUS\Queue 2\queue2.dwg

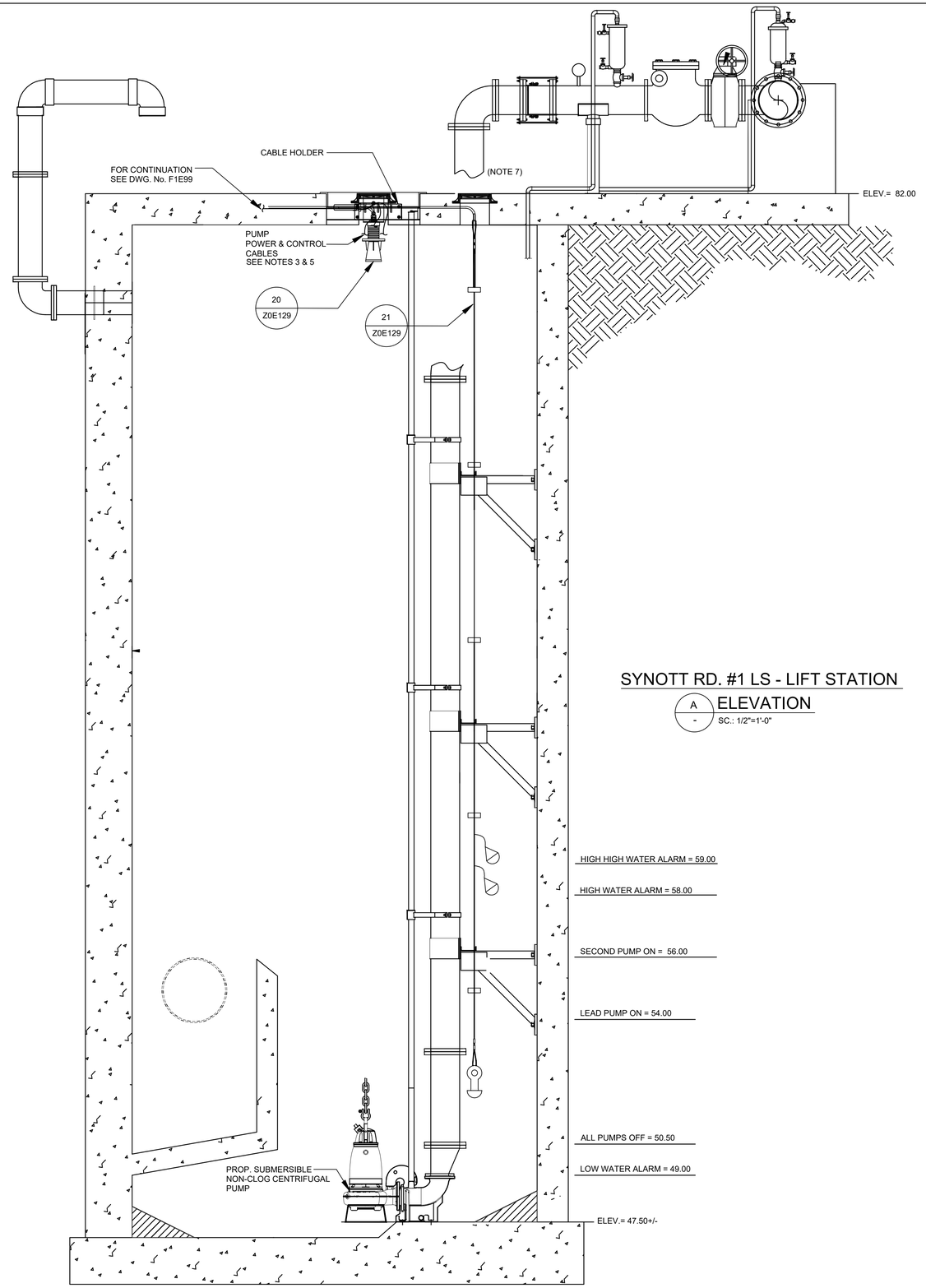

SYNOTT RD. #1 LS - LIFT STATION

A
-
ELEVATION

SC.: 1/2"=1'-0"

NOTES:

1. GROUNDING SHALL BE PER N.E.C. MINIMUM REQUIREMENTS.
2. THE ELECTRICAL INSTALLATION WITHIN THE WET WELL SHALL BE EXPLOSION PROOF IN ACCORDANCE WITH ARTICLE 510 OF THE NEC FOR CLASS I, DIVISION I, GROUP C & D.
3. ALL PUMP POWER AND CONTROL CABLE LEADS MUST BE THE SAME LENGTH REGARDLESS OF PUMP LOCATION FROM TERMINAL/JUNCTION BOX.
4. FOR MOTOR FEEDER AND CONTROL CABLES. INSTALL TYPE CSBE CABLE SEALING FITTING AT JUNCTION BOX ENTRANCE AND EXPLOSION PROOF SEAL IN CONDUITS TO POWER & CONTROL PANEL.
5. TERMINATE PUMP POWER & CONTROL CONDUITS WITH CSBE SEAL. ATTACH STAINLESS STEEL SPLIT SLEEVE CABLE SUPPORT ON EACH POWER AND CONTROL CABLE.
6. INSTRUMENTS SHOWN IN APPROXIMATE LOCATION. ACTUAL LOCATION SHALL BE CONFIRMED DURING CONSTRUCTION.
7. FOR MECHANICAL ELEVATION SECTION, SEE DRAWING No. F1M56.

NO.	DATE	REVISION	APP.

HATCH
750 TOWN & COUNTRY BLVD
SUITE 650
HOUSTON, TX 77024
P: 832-930-7670
TX FIRM NUMBER: F-314

SURVEYED BY:
AMANI ENGINEERING, INC.
FB NO. P-6357

STATE OF TEXAS
GUY N SEVERN
105809
LICENSED
PROFESSIONAL ENGINEER
7/21/2026

CITY OF HOUSTON

HOUSTON PUBLIC WORKS

LIFT STATION RENEWAL & REPLACEMENT PROJECT

SYNOTT RD. #1 LS

LIFT STATION ELEVATION

WBS NUMBER
R-000267-0173-4
DRAWING SCALE
AS NOTED
CITY OF HOUSTON PM
NUPUR KRISHNAN P.E. N.K.
SHEET NO. 228 OF 274

FOR CITY OF HOUSTON USE ONLY

HOUSTON PUBLIC WORKS
ACCEPTED AND FILED
82825
CITY DRAWING NUMBER
Approval Date 08/14/26
HOUSTON TX

F1E100

PLOTTED: 8/11/2026 11:49 AM
PLOT STYLE: COH.ctb
FILE PATH: \\wusppplot01\d$\Global ProjectWise Plotting - WUS\Queue 4\queue4.dwg

NOTES:

1. FOR CONDUIT SCHEDULE SEE DRAWING NO. F1E118.
2. FOR PPU-AC PANEL SEE DRAWING NO. F1E108.
3. FOR POWER & CONTROL PANEL DETAIL SEE DRAWING NO. F1E102.
4. FOR NAME PLATE SCHEDULE SEE DRAWING NO. F1E103.
5. EXPANSION JOINT FITTINGS AS REQUIRED.
6. DEPTH TO BE DETERMINED IN FIELD.

NO.	DATE	REVISION	APP.

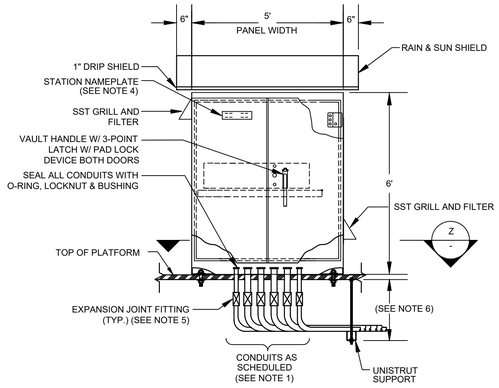

POWER & CONTROL CABINET - FRONT CONDUIT CONNECTION

SC.: NTS

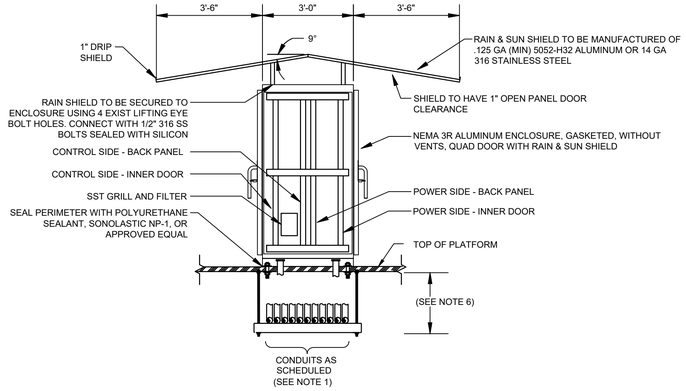

POWER & CONTROL CABINET - SIDE CONDUIT CONNECTION

SC.: NTS

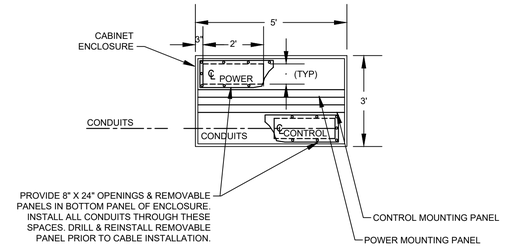

SECTION Z -

NTS

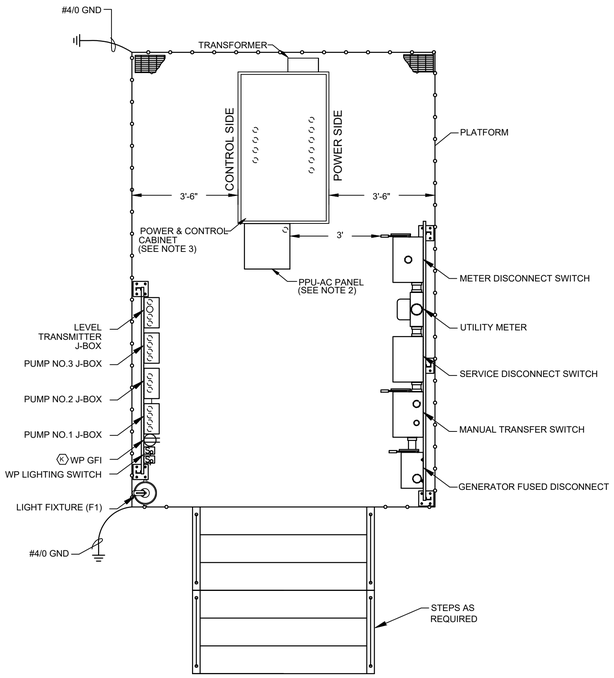

POWER & CONTROL CABINET ENCLOSURE ON ELEVATED PLATFORM DETAIL

SC.: NTS

HATCH
750 TOWN & COUNTRY BLVD
SUITE 650
HOUSTON, TX 77024
P: 832-930-7670
TX FIRM NUMBER: F-314

SURVEYED BY:
AMANI ENGINEERING, INC.
FB NO. P-6357

STATE OF TEXAS
GUY N SEVERN
105809
LICENSED PROFESSIONAL ENGINEER
7/21/2026

CITY OF HOUSTON

HOUSTON PUBLIC WORKS

LIFT STATION RENEWAL & REPLACEMENT PROJECT

SYNOTT RD. #1 LS POWER & CONTROL CABINET INSTALLATION

WBS NUMBER
R-000267-0173-4
DRAWING SCALE
AS NOTED
CITY OF HOUSTON PM
NUPUR KRISHNAN P.E. N.K.

FOR CITY OF HOUSTON USE ONLY

HOUSTON PUBLIC WORKS
ACCEPTED AND FILED
82825
CITY DRAWING NUMBER
Approval Date 08/14/26
HOUSTON TX

F1E101

SHEET NO. 229 OF 274

PLOTTED: 8/11/2026 11:49 AM
PLOT STYLE: COH.ctb
FILE PATH: \\wusppplot01\c$\Global ProjectWise Plotting - WUS\Queue 5\queue5.dwg

EQUIPMENT AND DEVICE SCHEDULE

ITEM	QTY.	DESCRIPTION
A	1	PANEL BOARD, 120/240V, 2 PHASE, 3 WIRE, 100A, 24 CKTS, SQUARE D MODEL # QP24100CP 21HX, 14.25W
B	3	NEMA MOTO STARTER, TYPE S, NONREVERSING, SIZE 2, 45A, 25HP, 480VAC, 3 POLE, SOLID STATE, 120VAC COIL, SCHNEIDER MODEL, 8536SDO1V02H30SX11
C	3	TIME DELAY RELAY WITH THREE FORM C CONTACTS, 24VDC COIL AND 11 PIN SOCKET BASE.TURCK RELECO MODEL CT3-E30/L WITH S3-S BASE C3-A30X/24DC
D	1	SINGLE CHANNEL INTRINSICALLY SAFE RELAY, ATC MODEL ISO-120-AFA
E	1	PROGRAMMING SCREEN (OIT), SIEMENS INDUSTRY TP900 - COMFORT TOUCH PANEL
F	3	HAND-OFF-AUTO SWITCH, 3 POSITION, HEAVY-DUTY, OILTIGHT WITH 2 SETS OF CONTACT BLOCKS (PUMP CONTROL), ALLEN-BRADLEY MODEL 800H-JR2B
G	3	INDICATING LIGHT, HEAVY DUTY, OILTIGHT, RED, 24 VDC, LED, WITH "RUN" LEGEND, ALLEN-BRADLEY MODEL 800H-QRTH2R
H	6	TERMINAL RAIL, STEEL GALVANIC ZINC, W: 2000 mm, H: 15 mm, D: 5.5 mm, WEIDMULLER ITEM No.0117510000
I	1	PUMP ALARM RESET PUSHBUTTON, ALLEN-BRADLEY MODEL 800H-AR2BF
J	2	SWITCH FOR CABINET LIGHT, 120V, 20A, SPST, HUBBELL MODEL HBL12211, WITH METALLIC BOX 4"x4" AND STEEL METALLIC SQUARE BOX COVER DUPLEX
K	2	DUPLEX RECEPTACLE, 120V, 20A, 2 WIRE, GROUNDED, HUBBELL MODEL HBL53621, WITH METALLIC BOX 4"x4" AND STEEL METALLIC SQUARE BOX SWITCH COVER.
L	2	24" LED STRIP LIGHT 120V SUITABLE FOR ZERO DEGREE OPERATION, HOFFMAN MODEL LF120V28
M	1	480VAC, 3 PHASES SURGE PROTECTOR - SURGE SUPPRESION INC MODEL SDLA3Y2
N	39	TAG CARRIER, SCHT 5 WEIDMULLER, CATALOG NO. 0292460000
P	3	CURRENT TRANSFORMER, RATIO AS SCHEDULED W/4-20mA OUTPUT, PHOENIX CONTACT MODEL MCR-SL-CUC-100-I
Q	12	TERMINAL BLOCKS, SIZED FOR MOTOR POWER REQUIREMENTS, WEIDMULLER WDU 10
R	16	WIRE DUCT 2" WIDE X 3" DEEP MINIMUM, LENGTH 6', HELLERMANN TYTON MODEL SL2X3W4
S	22	END BRACKET, WEW 35/2 WEIDMULLER, CATALOG NO. 1061200000
T	46	NAMEPLATES, SEE SPECIFICATIONS (SEE NAMEPLATE SCHEDULE)
U	3	ANALOG INPUT MODULE, 4 ANALOG INPUT , SIEMENS MODEL SIMATIC S7-1200, 6ES7231-4HD32-0XB0
V	6	FUSE HOLDER & FUSES - PHASE FAILURE FERRAZ SHAWMUT, PN 30313
W	1	72"x60"x36" NEMA 3R ENCLOSURE, GASKETED, WITHOUT VENTS INCLUDING QUAD DOORS, BACKPLANES, & RAIN-SUN SHIELD MANUFACTURED OF .125 5052-H32 ALUMINUM - NEMA ENCLOSURES MFG. CORP. NE726036-12FSDDA WITH 2ea. NEAF7260P & 4 ea. NE7230SWP
X	1	DOOR MOUNTED ROTARY HANDLE DISCONNECT SWITCH (SUITABLE ENVIROMENT), SQUARE D MODEL 9421LZ250H43
Y	1	MAIN CIRCUIT BREAKER, POWER PACT H, 100A 3-POLE, 600VAC, THERMAL MAGNETIC, SQUARE D, MODEL HJL36100T
Z	3	MOTOR CIRCUIT BREAKER, POWER PACT H, 60A, 3 POLE, 600VAC, THERMAL MAGNETIC, SQUARE D, MODEL HGL36060T
AA	164	TERMINAL BLOCKS, WEIDMULLER WDU 2.5, CATALOG NO. 1020000000
BB	3	EXTERNAL OVERLOAD RESET PUSHBUTTON MECHANISM, SQUARE D MODEL 9066 RA1
CC	2	ANALOG I/O SURGE SUPPRESSOR EATON MODEL IOP32D
DD	1	DIGITAL INPUT MODULE, 16 DIGITAL INPUT 24 VDC , SIEMENS MODEL SIMATIC S7-1200, 6ES7221-1BH32-0XB0
EE	1	CIRCUIT BREAKER POWERPACT H, 30A, 2 POLE, 600VAC, THERMAL MAGNETIC, SQUARE D, MODEL HJL26030
FF	1	GROUND BUS, SQUARE D MODEL 1630 PK9GTA
GG	1	LED LIGHT FOR INDOOR/OUTDOOR USE, 24 VDC, COLOR RED, FEDERAL SIGNAL MODEL LP3PL-024R.
HH	1	10 KVA, 480 - 240/120V,1ϕ, 3W DRY TYPE NEMA 3R ENCLOSURE TRANSFORMER
II	1	120VAC - 24VAC POWER SUPPLY (AS REQUIRED), SQUARE D MODEL 9070T200D13
JJ	12	CARTRIDGE FUSES & FUSE HOLDER, FERRAZ SHAWMUT, PN 30313
KK	8	QUARTER TURN CAPTIVE DOOR CLOSURE
LL	1	120VAC - 24VDC PLC POWER SUPPLY 5A, PHOENIX CONTACT MODEL QUINT-PS/1AC/24DC/5
MM	2	MOTION SWITCH, CHERRY MODEL E13-00H
NN	*	NOT USED
PP	2	INDICATING LED LIGHT, HEAVY DUTY, OILTIGHT, GREEN, 24 VDC, LED WITH " PRIMARY PLC" & "BACKUP, PLC" LEGEND, ALLEN-BRADLEY MODEL 800H-QRTH2G
QQ	21	CONTROL RELAY, 3 POLE, 24VDC CONTROL COIL - TURCK C3-A30X/24DC W/S3-S BASE
RR	2	CONTROL RELAY, 3 POLE, 120VAC CONTROL COIL - TURCK C3-A30X/120AC W/S3-S BASE
SS	1	COMMUNICATION ETHERNET SWITCH, SIEMENS MODEL SCALANCE X310FE
TT	1	120VAC SURGE SURGE PROTECTOR WITH ALARM CONTACT - SURGE SUPPRESSION INC MODEL SDLA1P1
UU	2	PROGRAMMABLE LOGIC CONTROLLER WITH EXPANSION UNIT, SIEMENS MODEL S7-1214C-ES7214-1HG40-0XB0
VV	1	PHASE AND UNDER VOLTAGE MONITOR, DIVERSIFIED ELECTRONICS MODEL PDB-480-ALE
WW	118	FUSED TERMINAL BLOCKS, WEIDMULLER WSI 6, CATALOG NO. 1011000000
XX	3	PUMP PROTECTION MODULE RATED FOR CLASS I, DIVISION I, MINICAS II 83 58 57 24VDC/AC
YY	2	ANALOG SIGNAL ISOLATOR, TURCK MODEL IMS-AI-DLI-22-DLI/L
ZZ	1	1-GANG WEATHERPROOF-IN-USE COVER, TAYMAC, MODEL MM420C.
AB	1	TAMPER/WEATHER RESISTANT GFCI RECEPTACLE, LEVITON, MODEL GFWT1-W.
AC	1	POWER DISTRIBUTION BLOCK, 3 POLE, EDISON MODEL HPB106-3
AD	1	1-GANG WEATHERPROOF BOX, 3-1/2", 2" DEPTH, ALUMINUM DIE CAST, BELL, MODEL 5320-0.
AE	1	6" EXHAUST FAN, 120V, STAINLESS FILTERS & GRILL PACKAGE W/BUG GUARD, HOFFMAN MODEL TFP6
AF	1	T-STAT FOR EXHAUST FAN, HOFFMAN, MODEL ATEMNOF

* - AS SCHEDULED

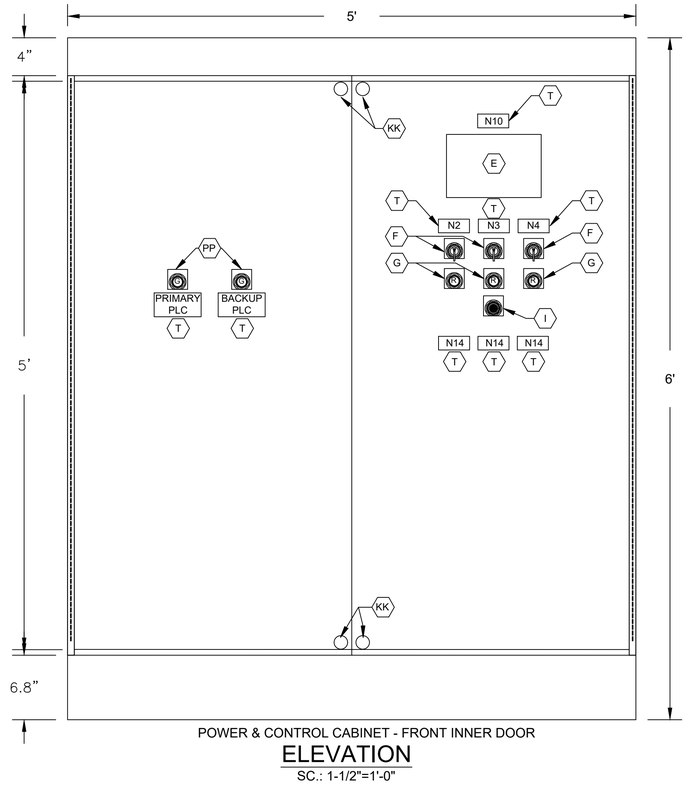

POWER & CONTROL CABINET - FRONT INNER DOOR

ELEVATION

SC.: 1-1/2"=1'-0"

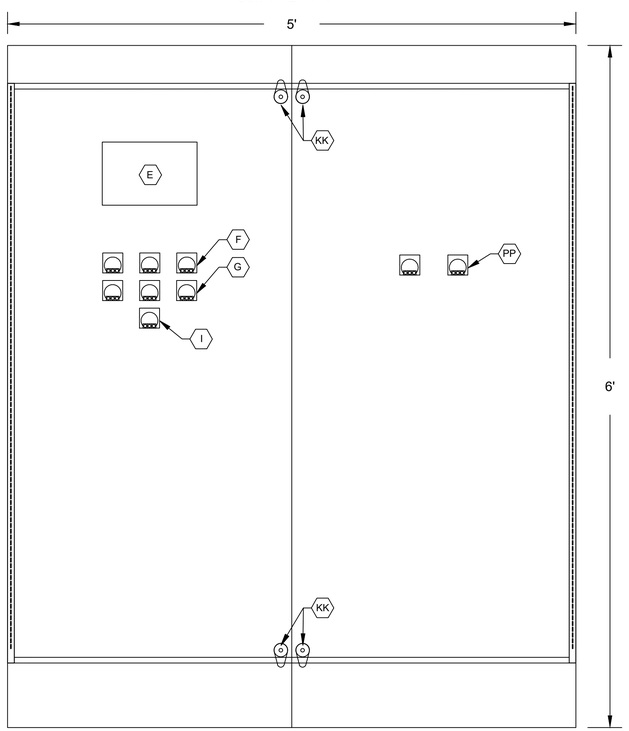

POWER & CONTROL CABINET - BACK INNER DOOR

ELEVATION

SC.: 1-1/2"=1'-0"

NOTES:

1. NAMEPLATES SHALL BE MOUNTED TO PANELS USING STAINLESS STEEL HARDWARE.
2. REFER SPECIFICATIONS FOR ALL PANEL COMPONENTS.

NO.	DATE	REVISION	APP.

HATCH
750 TOWN & COUNTRY BLVD
SUITE 650
HOUSTON, TX 77024
P: 832-930-7670
TX FIRM NUMBER: F-314

SURVEYED BY:
AMANI ENGINEERING, INC.
FB NO. P-6357

STATE OF TEXAS
GUY N SEVERN
105809
LICENSED
PROFESSIONAL ENGINEER
7/21/2026

CITY OF HOUSTON

HOUSTON PUBLIC WORKS

LIFT STATION RENEWAL & REPLACEMENT PROJECT

SYNOTT RD. #1 LS

POWER & CONTROL CABINET EQUIPMENT LAYOUT AND SCHEDULE

WBS NUMBER	FOR CITY OF HOUSTON USE ONLY
R-000267-0173-4	HOUSTON PUBLIC WORKS ACCEPTED AND FILED 82825 CITY DRAWING NUMBER Approval Date 08/14/26 HOUSTON TX
DRAWING SCALE	
AS NOTED	
CITY OF HOUSTON PM	
NUPUR KRISHNAN P.E. N.K.	
F1E102	SHEET NO. 230 OF 274

PLOTTED: 8/11/2026 11:50 AM
PLOT STYLE: COH.ctb
FILE PATH: \\wusppplot01\d$\Global ProjectWise Plotting - WUS\Queue 2\queue2.dwg

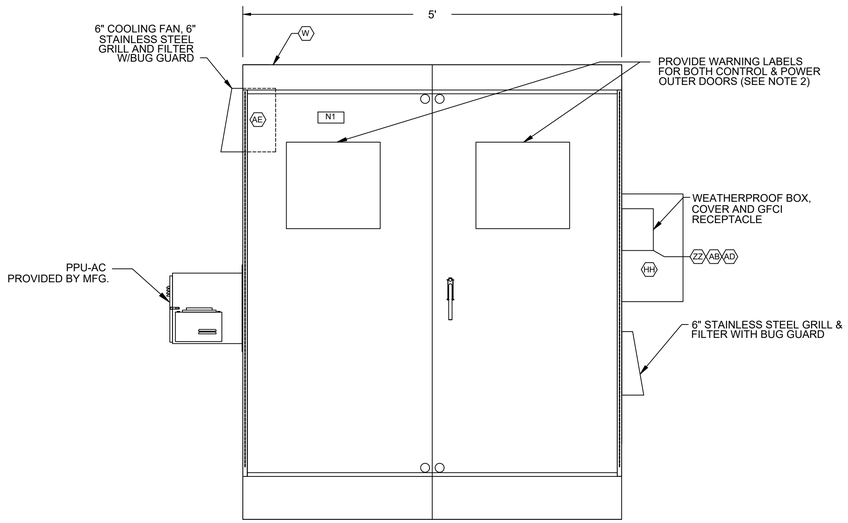

POWER & CONTROL CABINET (CONTROL SIDE)
OUTER DOOR

ELEVATION

SC.: 1"=1'-0"

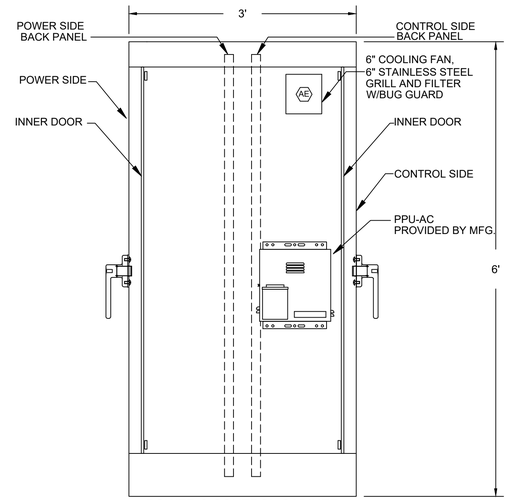

POWER & CONTROL CABINET
(LEFT SIDE VIEW)

ELEVATION

SC.: 1"=1'-0"

NAMEPLATE SCHEDULE

DESIGNATION	ENGRAVED
N1	SYNOTT RD. #1 PUMP STATION
N2	PUMP NO. 1
N3	PUMP NO. 2
N4	PUMP NO. 3
N5	NOT USED.
N6	NOT USED.
N7	NOT USED.
N8	NOT USED.
N9	NOT USED.
N10	PROGRAMMING SCREEN
N11	NOT USED.
N12	PRIMARY PLC
N13	BACKUP PLC
N14	MOTOR DATA HORSEPOWER (OUTPUT) ----------17 RPM AT FULL LOAD ----------1800 MAX START PER HOUR ---------- 30 FREQUENCY ----------60 NUMBER OF PHASES ----------3 MODEL NUMBER ---------- RATED VOLTAGE ---------- 480 Vac SERVICE FACTOR ---------- 0.91 FULL LOAD AMPS ---------- 18 A INSULATION CLASS ---------- H NEMA DESIGN LETTER ---------- TEMPERATURE RISE ---------- NEMA FRAME SIZE ---------- DATE OF MANUFACTURE ---------- THERMO PROTECTION ---------- MOISTURE PROTECTION ----------
N15	EXTERNAL OVERLOAD RESET PUSH BUTTON MECHANISM
N16	MAIN BREAKER

NOTES:

1. SEE SHEET F1E102 FOR EQUIPMENT AND DEVICE SCHEDULE.
2. FOR ARC FLASH HAZARD WARNNG AND LABEL REQUIREMENTS REFER TO NEC SECTIONS 110.16 & 110.21

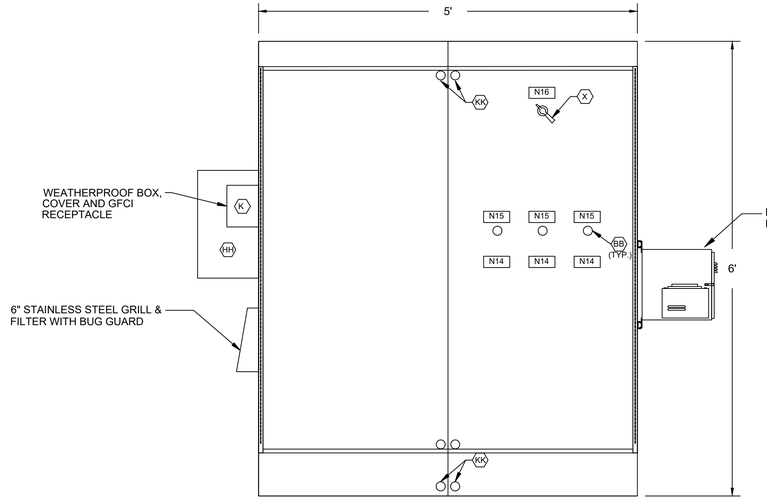

POWER & CONTROL CABINET (POWER SIDE)
INNER DOOR

ELEVATION

SC.: 1"=1'-0"
(SEE NOTE 1)

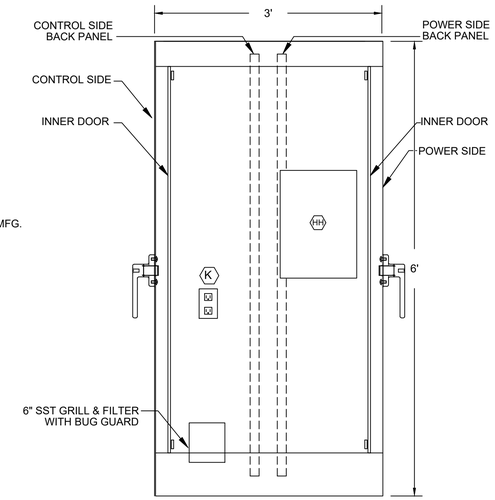

POWER & CONTROL CABINET
(RIGHT SIDE VIEW)

ELEVATION

SC.: 1"=1'-0"

NO.	DATE	REVISION	APP.

HATCH
750 TOWN & COUNTRY BLVD
SUITE 650
HOUSTON, TX 77024
P: 832-930-7670
TX FIRM NUMBER: F-314

SURVEYED BY:
AMANI ENGINEERING, INC.
FB NO. P-6357

STATE OF TEXAS
GUY N SEVERN
105809
LICENSED
PROFESSIONAL ENGINEER
7/21/2026

CITY OF HOUSTON

HOUSTON PUBLIC WORKS

LIFT STATION RENEWAL & REPLACEMENT PROJECT

SYNOTT RD. #1 LS

POWER & CONTROL CABINET
EQUIPMENT LAYOUT-I

WBS NUMBER
R-000267-0173-4
DRAWING SCALE
AS NOTED
CITY OF HOUSTON PM
NUPUR KRISHNAN P.E. N.K.
SHEET NO. 231 OF 274

FOR CITY OF HOUSTON USE ONLY

HOUSTON PUBLIC WORKS
ACCEPTED AND FILED
82825
CITY DRAWING NUMBER
Approval Date 08/14/26
HOUSTON TX

F1E103

PLOTTED: 8/11/2026 12:01 PM
PLOT STYLE: COH.ctb
FILE PATH: \\wuspplot01\d$\Global ProjectWise Plotting - WUS\Queue 4\queue4.dwg

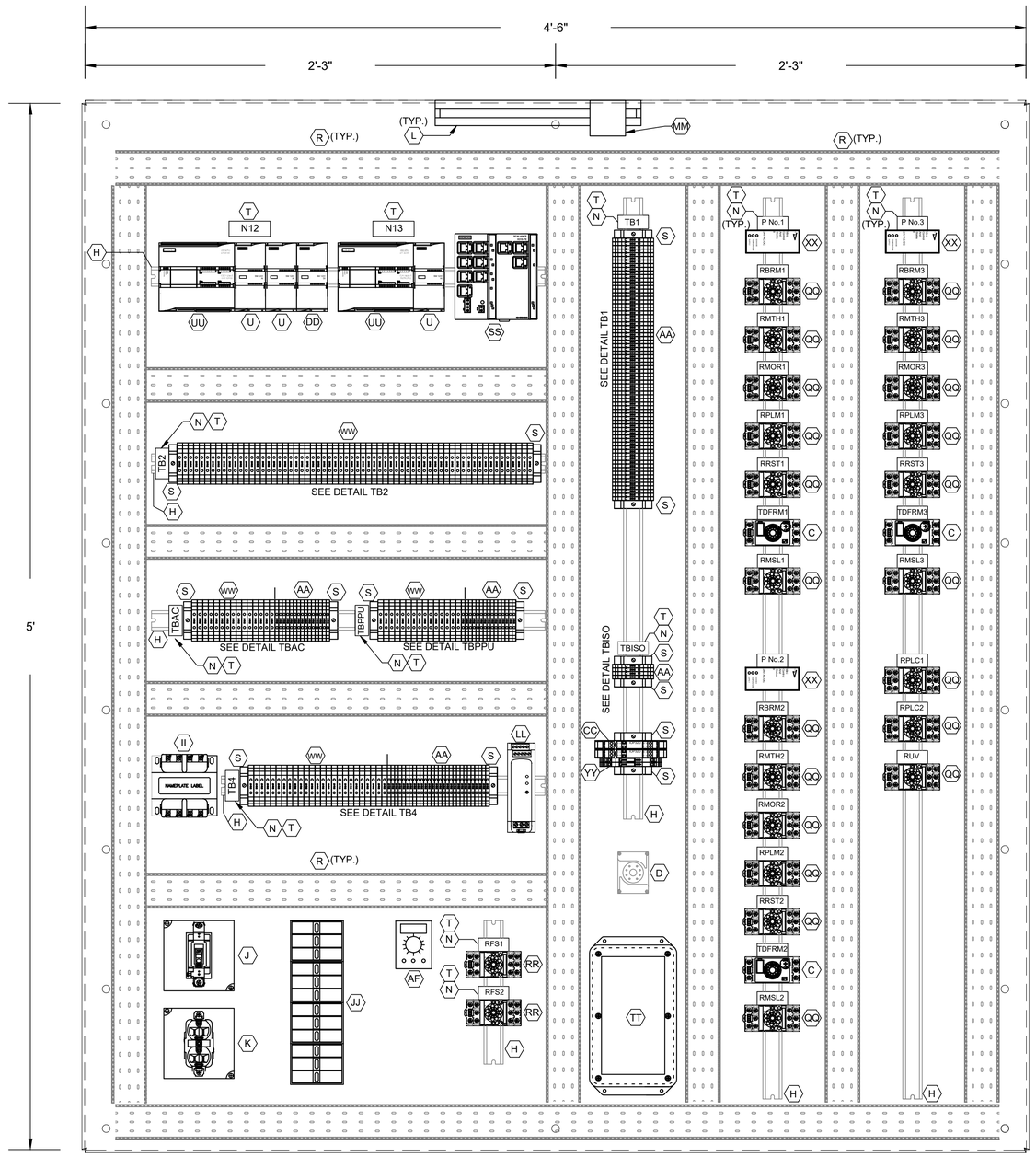

CONTROL PANEL ELEVATION

SC.: 3"=1'-0"

DETAIL TB1
L1A
L1N
SPARE
3A
3B
3C
49
50
51
52
53
54
1004
1
24V-
24V-
1002
2
11
1001
1001A
12
1003
1003A
1002
1004
18
3N
SPARE
36
36N
41
42
43
44
SPARE
L1A
L1N
103
104
105
106
107
108
110
113
115
116
119
SPARE
203
204
205
206
207
208
210
213
215
216
219
SPARE
303
304
305
306
307
308
310
313
315
316
319

ALL L AND N FOR EACH PUMP CONTROL TO BE FUSED

DETAIL TB2
36A
37A
50
52
54
52A
54A
L+
M
35B
38B
41B
47B
13B
13AB
13GB
L+
M
14B
14A
14GB
L+
M
13
13A
13G
14
14A
14G
17
18
18B
28
29
32
35B
33
42
44
103
104
115
109
110
118
120
121
122
123
209
210
211
218
220
222
223
309
310
316
317
318
320
322
323

DETAIL TBAC
L1
L2
L3
L4
L5
L6
L7
L8
L9
L10
L11
L12
L13
L14
L15
N1
N2
N3
N4
N5
N6
N7
N8
N9
N10
N11
N12
N13
N14
N15

DETAIL TBPPU
L1
L2
L3
L4
L5
L6
L7
L8
L9
L10
L11
L12
L13
L14
L15
N1
N2
N3
N4
N5
N6
N7
N8
N9
N10
N11
N12
N13
N14
N15

DETAIL TB4
1
2
3
4
5
6
7
8
9
10
11
12
13
14
15
16
17
18
19
20
21
22
23
24
25
N1
N2
N3
N4
N5
N6
N7
N8
N9
N10
N11
N12
N13
N14
N15
N16
N17
N18
N19
N20
N21
N22
N23
N24
N25

DETAIL TB-ISO
1500
1501
1503
1504

LEGEND

TAG	DESCRIPTION
RMTH	MOTOR HIGH TEMPERATURE ALARM RELAY
RPLM	PLC PUMP RUN RELAY
RRST	PUMP RESET AUX RELAY
RPLC	PLC MODE AUX RELAY
RMOR	MOTOR OVERLOAD ALARM RELAY
RBRM	BACKUP SYSTEM RUN RELAY
RUV	UNDER VOLTAGE RELAY
ISO	INTRINSICALLY SAFE RELAY
RFS	PUMP RUN FLOAT SWITCH RELAY
TDFRM	TIMER FLOAT SWITCH RUN RELAY
RMSL	MOTOR SEAL LEAK ALARM RELAY

NOTES:

1. SEE SHEET F1E102 FOR EQUIPMENT AND DEVICE SCHEDULE.

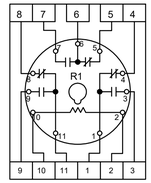

RELAY DETAIL ITEM RR

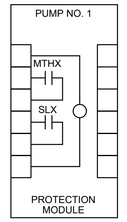

PUMP PROTECTION MODULE DETAIL, ITEM XX

REVISION	DATE	APP.

HATCH
750 TOWN & COUNTRY BLVD
SUITE 650
HOUSTON, TX 77024
P: 832-930-7670
TX FIRM NUMBER: F-314

SURVEYED BY:
AMANI ENGINEERING, INC.
FB NO. P-6357

STATE OF TEXAS
GUY N SEVERN
105809
LICENSED PROFESSIONAL ENGINEER
7/21/2026

CITY OF HOUSTON
HOUSTON PUBLIC WORKS

LIFT STATION RENEWAL & REPLACEMENT PROJECT
SYNOTT RD. #1 LS

POWER & CONTROL CABINET EQUIPMENT LAYOUT-II

WBS NUMBER
R-000267-0173-4
DRAWING SCALE
AS NOTED
CITY OF HOUSTON PM
NUPUR KRISHNAN P.E. N.K.

FOR CITY OF HOUSTON USE ONLY

HOUSTON PUBLIC WORKS
ACCEPTED AND FILED
82825
CITY DRAWING NUMBER
Approval Date 08/14/26
HOUSTON TX

F1E104

SHEET NO. 232 OF 274

PLOTTED: 8/11/2026 11:53 AM

PLOT STYLE: COH.ctb

FILE PATH: \\wsupplot01\d$\Global ProjectWise Plotting - WUS\Queue 1\queue1.dwg

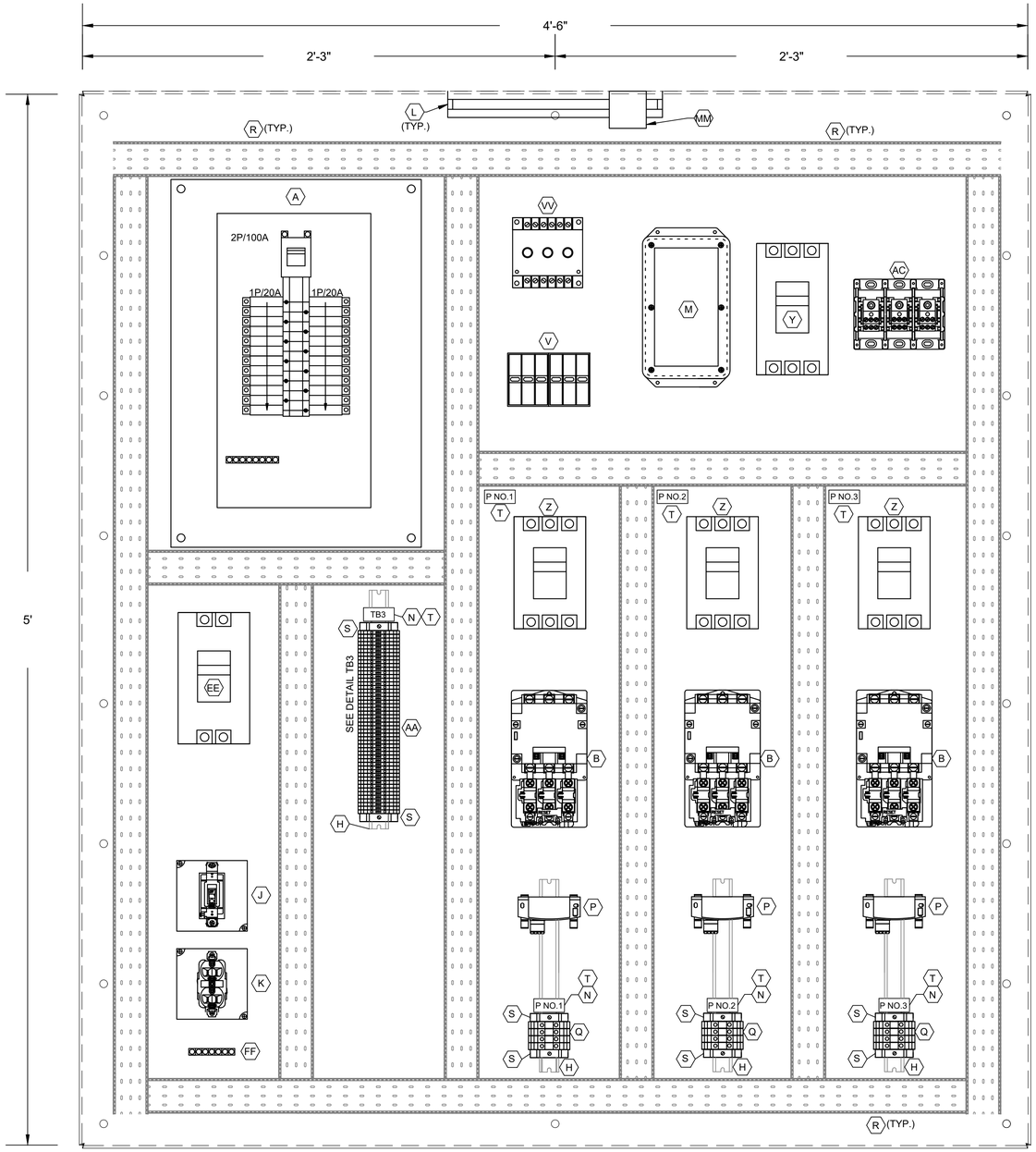

POWER PANEL
ELEVATION
SC.: 3"=1'-0"

3
18
L1A
L1N
SPARE
SPARE
103
104
105
106
107
108
110
113
115
116
119
SPARE
203
204
205
206
207
208
210
213
215
216
219
SPARE
303
304
305
306
307
308
310
313
315
316
319
SPARE
SPARE
SPARE
SPARE
SPARE
SPARE
3A
3B
3C

DETAIL TB3

NO.	DATE	REVISION	APP.

NOTES:

1. SEE SHEET F1E102 FOR EQUIPMENT AND DEVICE SCHEDULE.

HATCH
750 TOWN & COUNTRY BLVD
SUITE 650
HOUSTON, TX 77024
P: 832-930-7670
TX FIRM NUMBER: F-314

SURVEYED BY:
AMANI ENGINEERING, INC.
FB NO. P-6357

STATE OF TEXAS
GUY N SEVERN
105809
LICENSED PROFESSIONAL ENGINEER
7/21/2026

CITY OF HOUSTON
HOUSTON PUBLIC WORKS

LIFT STATION RENEWAL & REPLACEMENT PROJECT
SYNOTT RD. #1 LS

POWER & CONTROL CABINET
EQUIPMENT LAYOUT-III

WBS NUMBER
R-000267-0173-4
DRAWING SCALE
AS NOTED
CITY OF HOUSTON PM
NUPUR KRISHNAN P.E. N.K.
SHEET NO. 233 OF 274

FOR CITY OF HOUSTON USE ONLY

HOUSTON PUBLIC WORKS
ACCEPTED AND FILED
82825
CITY DRAWING NUMBER
Approval Date 08/14/26
HOUSTON TX

F1E105

PLOTTED: 8/11/2026 11:58 AM
PLOT STYLE: COH.ctb
FILE PATH: \\wusppplot01\d$\Global ProjectWise Plotting - WUS\Queue 4\queue4.dwg

FIELD

POWER & CONTROL CABINET

FIELD

FROM UTILITY METER
REFER TO SHEET
F1E106 480VAC, 3Ø, 4W

METER DISCONNECT SWITCH

3 POLE DOUBLE
THROW HEAVY DUTY
TRANSFER SWITCH

GND BUS

NEUT

SERVICE RACK
FRAME

GROUND
LUG
(TYP.)

GROUND
WELL
(TYP.)

SURGE PROTECTOR
JE-1
(SEE NOTE 3)
SPD
M

MAIN
BREAKER
Y

PHASE
MONITOR
JE-2
VV

PLC

(SEE NOTE 3)

MCP
M1

4-20mA
CURRENT
TRANSDUCER

MOR
(SEE NOTE 5)
P

4-20mA
TO PLC
+
-

T1
T2
T3

PUMP NO.1
M

TB-3
105
106
107
108
GND

TSH-1
LSH-1

GENERATOR FUSED
DISCONNECT SWITCH

NEUT

GND

MCP
M2

PUMP NO.2

TB-3
205
206
207
208
GND

TSH-2
LSH-2

PORTABLE
GENERATOR

NEUT

GND

GEN

MCP
M3

PUMP NO. 3

TB-3
305
306
307
308
GND

TSH-3
LSH-3

CB
EE

SURGE PROTECTOR
JE-3
(SEE NOTE 3)
SPD
TT

10KVA, 480-120/240V
1 PHASE TRANSFORMER
HH

60A
NEUT
GND

240V, 100A, 12 CKT
LIGHTING PANEL
A

NOTES:

1. UNLESS OTHERWISE INDICATE, ALL DEVICES WITHOUT FURTHER DESIGNATION ARE LOCATED AT THE CONTROL PANEL.
2. SEE SHEET F1E102 FOR EQUIPMENT AND DEVICE SCHEDULE.
3. PROVIDE FUSE SIZE ACCORDING TO MANUFACTURER'S REQUIREMENTS.
4. CONTRACTOR SHALL TERMINATE POWER & CONTROL WIRES PER MANUFACTURER'S REQUIREMENTS.
5. MOTOR OVERLOAD RELAY.

NO.	DATE	REVISION	APP.

LEGEND

- DEVICE OR FIELD TERMINAL LOCATED AT MOTOR
- DEVICE OR FIELD TERMINAL LOCATED REMOTE
- DEVICE OR FIELD TERMINAL LOCATED AT POWER PANEL
- FIELD TERMINAL LOCATED AT CONTROL PANEL
- REMOTE TERMINAL
- DEVICE TERMINAL NO.
- PC INTERFACE TERMINAL

HATCH
750 TOWN & COUNTRY BLVD
SUITE 650
HOUSTON, TX 77024
P: 832-930-7670
TX FIRM NUMBER: F-314

SURVEYED BY:
AMANI ENGINEERING, INC.
FB NO. P-6357

STATE OF TEXAS
GUY N SEVERN
105809
LICENSED
PROFESSIONAL ENGINEER
7/21/2026

CITY OF HOUSTON
HOUSTON PUBLIC WORKS

LIFT STATION RENEWAL & REPLACEMENT PROJECT
SYNOTT RD. #1 LS

INCOMING POWER THREE LINE DIAGRAM

WBS NUMBER
R-000267-0173-4
DRAWING SCALE
NTS
CITY OF HOUSTON PM
NUPUR KRISHNAN P.E. N.K.
SHEET NO. 234 OF 274

FOR CITY OF HOUSTON USE ONLY

HOUSTON
PUBLIC WORKS
ACCEPTED AND FILED
82825
CITY DRAWING NUMBER
Approval Date 08/14/26
HOUSTON TX

F1E106

PLOTTED: 8/11/2026 11:50 AM
PLOT STYLE: COH.ctb
FILE PATH: \\wusppplot01\d$\Global ProjectWise Plotting - WUS\Queue 1\queue1.dwg

PLOTTED: 8/11/2026 11:49 AM
PLOT STYLE: COH.ctb
FILE PATH: \\wusppplot01\d$\Global ProjectWise Plotting - WUS\Queue 3\queue3.dwg

POWER & CONTROL CABINET

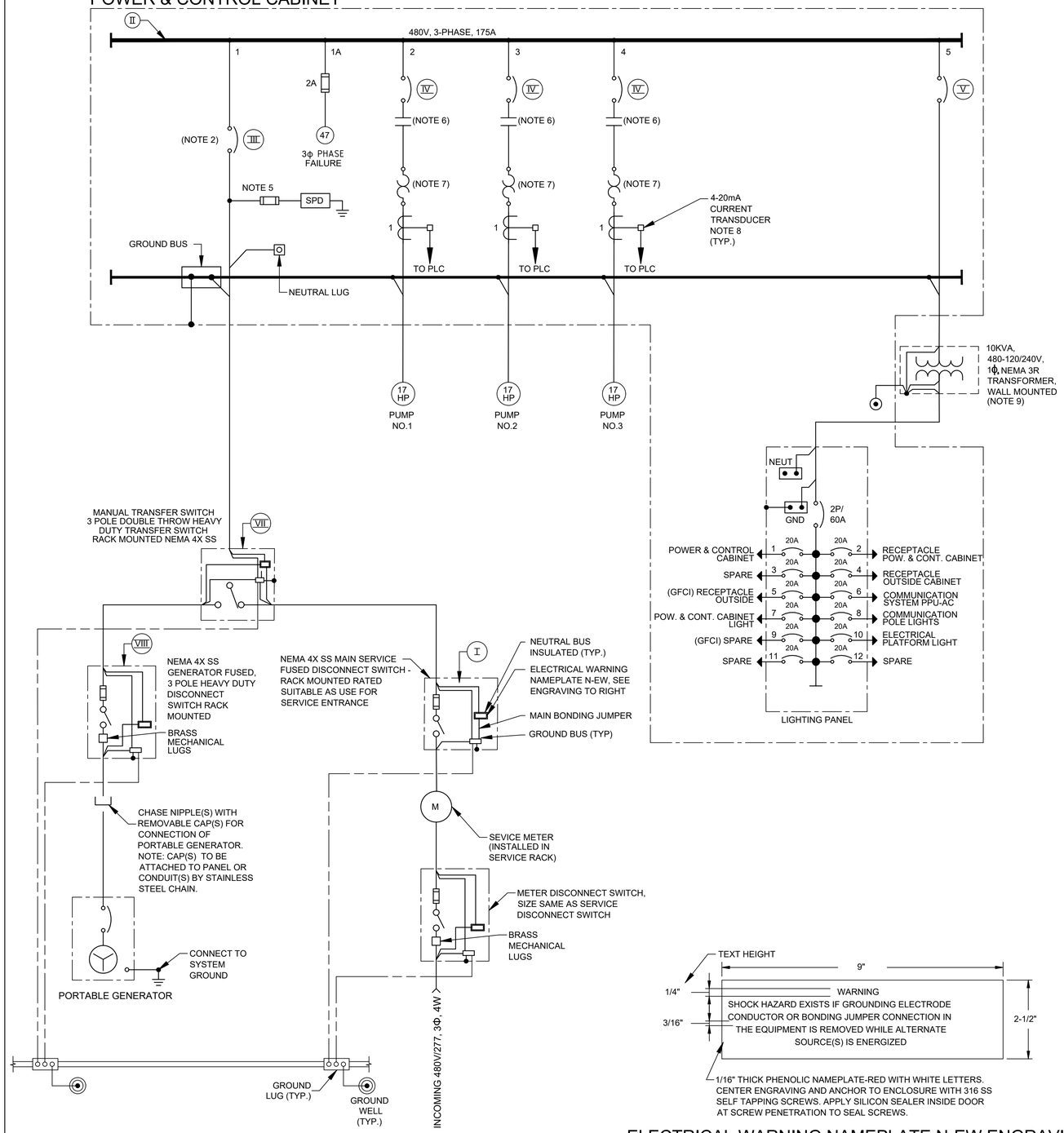

ITEM	CIRCUIT	DESCRIPTION	RATINGS FOR PUMP SIZES INDICATED 3 @ 17HP
I	--	MAIN DISCONNECT SWITCH	
		OPERATING VOLTAGE	480V
		CURRENT RATING	200A
		CURRENT LIMITING FUSES TYPE & SIZE	CLASS J 100A
II	--	POWER & CONTROL CABINET POWER DISTRIBUTION BLOCK	
		OPERATING VOLTAGE	480 VAC
		CURRENT RATING	175A
		NEUTRAL SIZE & TYPE	-
		SCCR RATING	-
III	1	MAIN BREAKER	
		3 POLE - TYPE	MOLDED CASE
		MOUNTING	FIXED
		OPERATING VOLTAGE	480V
		FRAME SIZE	150A
		TRIP SETTING	100A
		INTERRUPT CAPACITY	42KA SYM
		OPTIONS	NONE
IV	2 3 4	PUMP MOTOR STARTERS	
		QUANTITY	3
		MOUNTING	FIXED
		SHORT CIRCUIT PROTECTION	
		3 POLE - TYPE	MCP
		OPERATING VOLTAGE	480V
		FRAME SIZE	150A
		TRIP SETTING	60A
		INTERRUPT CAPACITY	42KA SYM
		MOTOR STARTING CONTACTOR	
		3 POLE - TYPE	AIR
		OPERATING VOLTAGE	480V
		SIZE	NEMA 2
		OVERLOAD PROTECTION TYPE	SOLID STATE MOR
V	5	LIGHTING FEEDER BREAKER	
		NO. OF POLES	2
		TYPE	MOLDED CASE
		OPERATING VOLTAGE	480V
		FRAME SIZE	150A
		TRIP SETTING	30A
		INTERRUPT CAPACITY	42KA SYM
VII	--	MANUAL TRANSFER SWITCH	3P, 4W SN
		OPERATING VOLTAGE	480V
		CURRENT RATING	200A
VIII	--	GENERATOR FUSED DISCONNECT SWITCH	3P, 4W SN
		OPERATING VOLTAGE	480V
		CURRENT RATING	200A
		CURRENT LIMITING FUSES TYPE & SIZE	CLASS J 100 A

NOTES:

1. FOR DESCRIPTION AND RATINGS OF ITEMS INDICATED WITH ROMAN NUMERAL FLAGS, SEE DEVICE RATINGS SCHEDULE.
2. PROVIDE BREAKER WITH KIRK KEY INTER-CONNECTED WITH GENERATOR/TRANSFER BREAKER.
3. CONTRACTOR SHALL VERIFY ACTUAL AMPERAGES OF MOTORS AND SIZE STARTERS, MOTOR CIRCUIT PROTECTORS, ETC. ACCORDINGLY.
4. REFER TO SPEC SECTION 16120 FOR CONDUCTOR COLOR CODE.
5. PROVIDE FUSE SIZE ACCORDING TO MANUFACTURER'S SPECIFICATIONS.
6. STARTER NEMA SIZE 2 IS MINIMUM AND NEMA SIZE 3 OR GREATER SHALL BE VACUUM TYPE.
7. MOTOR OVERLOAD RELAY.
8. PROVIDE 5A PRIMARY TO 4-20mA CURRENT TRANSDUCER.
9. TRANSFORMER TO BE MOUNTED ON CABINET EXTERIOR SIDE.

NO.	DATE	REVISION	APP.

ELECTRICAL WARNING NAMEPLATE N-EW ENGRAVING

LOAD CALCULATION

ITEM	DESCRIPTION	HP	FLI*
1	PUMP NO. 1	17HP	22A
2	PUMP NO. 2	17HP	22A
3	PUMP NO. 3	17HP	0A
4	LIGHTING PANEL		15A
SUBTOTAL			59A
25% OF LARGEST MOTOR LOAD			6A
MINIMUM AMPACITY @480V,3Φ			65A

* BASED ON SELECTED PUMP MFG DATA

HATCH
750 TOWN & COUNTRY BLVD
SUITE 650
HOUSTON, TX 77024
P: 832-930-7670
TX FIRM NUMBER: F-314

SURVEYED BY:
AMANI ENGINEERING, INC.
FB NO. P-6357

STATE OF TEXAS
GUY N SEVERN
105809
LICENSED PROFESSIONAL ENGINEER
7/21/2026

CITY OF HOUSTON
HOUSTON PUBLIC WORKS

LIFT STATION RENEWAL & REPLACEMENT PROJECT
SYNOTT RD. #1 LS

SINGLE LINE DIAGRAM

WBS NUMBER	FOR CITY OF HOUSTON USE ONLY
R-000267-0173-4	HOUSTON PUBLIC WORKS ACCEPTED AND FILED 82825 CITY DRAWING NUMBER Approval Date 08/14/26 HOUSTON TX
DRAWING SCALE	
NTS	
CITY OF HOUSTON PM	
NUPUR KRISHNAN P.E. N.K.	

F1E107

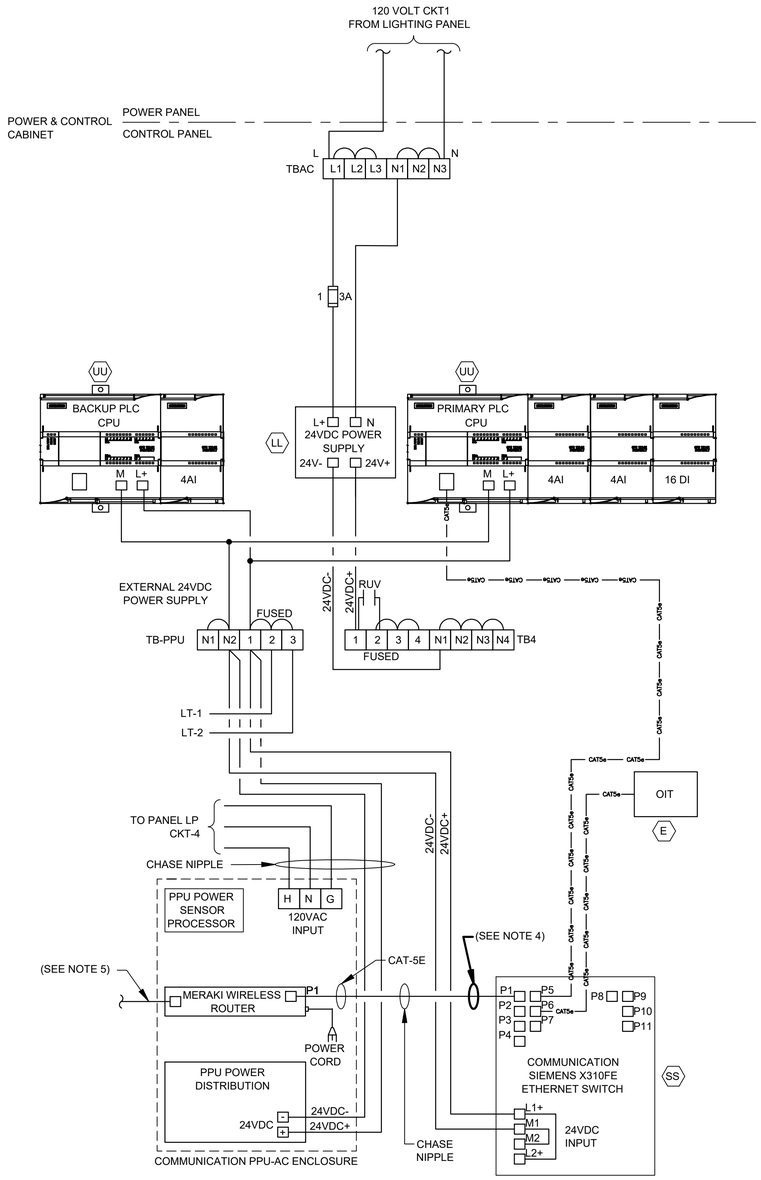

CONTROL POWER &
COMMUNICATIONS WIRING

DIAGRAM

NTS

(SEE NOTE 3)

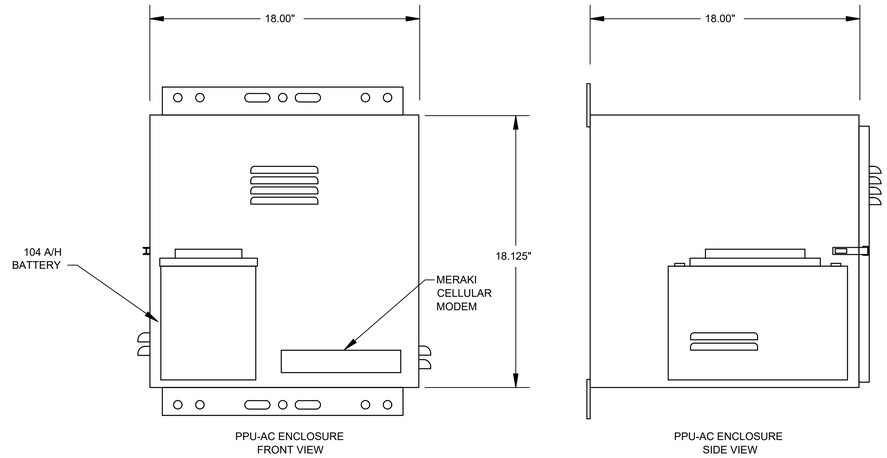

PPU-AC ENCLOSURE
FRONT VIEW

PPU-AC ENCLOSURE
SIDE VIEW

PPU-AC
CONTROL ENCLOSURE

ELEVATION

NTS

NOTES:

1. REFER TO SPEC SECTION 16120 FOR CONDUCTOR COLOR CODE.
2. THE PLC POWER SUPPLY SHALL FEED THE 24VDC I/O.
3. COMMUNICATION PPU-AC & SCADA SHALL BE PROVIDED BY CONTRACTOR INCLUDING TO RUN CONDUITS & WIRES.
4. ETHERNET CABLE FOR MERAKI CELLULAR ROUTER (P1).
5. POE CABLE TO RADIO.

NO.	DATE	REVISION	APP.

HATCH
750 TOWN & COUNTRY BLVD
SUITE 650
HOUSTON, TX 77024
P: 832-930-7670
TX FIRM NUMBER: F-314

SURVEYED BY:
AMANI ENGINEERING, INC.
FB NO. P-6357

STATE OF TEXAS
GUY N SEVERN
105809
LICENSED
PROFESSIONAL ENGINEER
7/21/2026

CITY OF HOUSTON

HOUSTON PUBLIC WORKS

LIFT STATION RENEWAL & REPLACEMENT PROJECT

SYNOTT RD. #1 LS

COMMUNICATION DIAGRAM

WBS NUMBER
R-000267-0173-4
DRAWING SCALE
NTS
CITY OF HOUSTON PM
NUPUR KRISHNAN P.E. N.K.
SHEET NO. 236 OF 274

FOR CITY OF HOUSTON USE ONLY

HOUSTON
PUBLIC WORKS
ACCEPTED AND FILED
82825
CITY DRAWING NUMBER
Approval Date 08/14/26
HOUSTON TX

F1E108

PLOTTED: 8/11/2026 12:00 PM
PLOT STYLE: COH.ctb
FILE PATH: \\wuspplot01\d$\Global ProjectWise Plotting - WUS\Queue 3\queue3.dwg

PLOTTED: 8/11/2026 11:54 AM
PLOT STYLE: COH.ctb
FILE PATH: \\wuspplot01\d$\Global ProjectWise Plotting - WUS\Queue 3\queue3.dwg

HMI

POWER & CONTROL CABINET (PLC)

POWER & CONTROL CABINET

	PUMP NO. 1								PUMP NO. 2								PUMP NO. 3								PLC		BACKUP PLC		
	SEAL FAIL ALARM	MOTOR OVERLOAD ALARM	MOTOR CURRENT	HIGH TEMP ALARM	IN HAND	IN AUTO	ON/OFF	START/ STOP	SEAL FAIL ALARM	MOTOR OVERLOAD ALARM	MOTOR CURRENT	HIGH TEMP ALARM	IN HAND	IN AUTO	ON/OFF	START/ STOP	SEAL FAIL ALARM	MOTOR OVERLOAD ALARM	MOTOR CURRENT	HIGH TEMP ALARM	IN HAND	IN AUTO	ON/OFF	START/ STOP	ALARMS RESET	FLOAT HIGH-HIGH WETWELL LEVEL	PUMP NO. 1 START/ STOP	PUMP NO. 2 START/ STOP	PUMP NO. 3 START/ STOP
	MA 1	MO 1	II 1	TH 1	HI 1	IA 1	YFS 1	YCS 1	MA 2	MO 2	II 2	TH 2	HI 2	IA 2	YFS 2	YCS 2	MA 3	MO 3	II 3	TH 3	HI 3	IA 3	YFS 3	YCS 3	RE 1	LAHH 1A	YCS 1A	YCS 2A	YCS 3A

POWER & CONTROL CABINET

PUMP NO. 1		PUMP NO. 2		PUMP NO. 3		PRIMARY PLC	BACKUP PLC	ALARMS RESET		
H/O/A	RUN	H/O/A	RUN	H/O/A	RUN					
O	R	O	R	O	R	G	G		OIT	

TO SHEET F1E110

F1E110

F1E110

WET WELL

LT 1
LE 1

LT 2
LE 2

LSH 1A
TSH 1A
FS2 HIGH-HIGH LEVEL FLOAT SWITCH
M
PUMP NO.1

LSH 2A
TSH 2A
M
PUMP NO.2

LSH 3A
TSH 3A
FS1 HIGH LEVEL FLOAT SWITCH
M
PUMP NO.3

AIR-RELEASE
XX"-DIP
XX"-DIP
XX"-DIP
XX"-DIP
XX"-DIP
DISCHARGE

NO.	DATE	REVISION	APP.

HATCH
750 TOWN & COUNTRY BLVD
SUITE 650
HOUSTON, TX 77024
P: 832-930-7670
TX FIRM NUMBER: F-314

SURVEYED BY:
AMANI ENGINEERING, INC.
FB NO. P-6357

STATE OF TEXAS
GUY N SEVERN
105809
LICENSED PROFESSIONAL ENGINEER
7/21/2026

CITY OF HOUSTON
HOUSTON PUBLIC WORKS

LIFT STATION RENEWAL & REPLACEMENT PROJECT
SYNOTT RD. #1 LS

PROCESS & INSTRUMENTATION DIAGRAM-1

WBS NUMBER
R-000267-0173-4
DRAWING SCALE
NTS
CITY OF HOUSTON PM
NUPUR KRISHNAN P.E. N.K.
SHEET NO. 237 OF 274

FOR CITY OF HOUSTON USE ONLY

HOUSTON PUBLIC WORKS
ACCEPTED AND FILED
82825
CITY DRAWING NUMBER
Approval Date 08/14/26
HOUSTON TX

F1E109

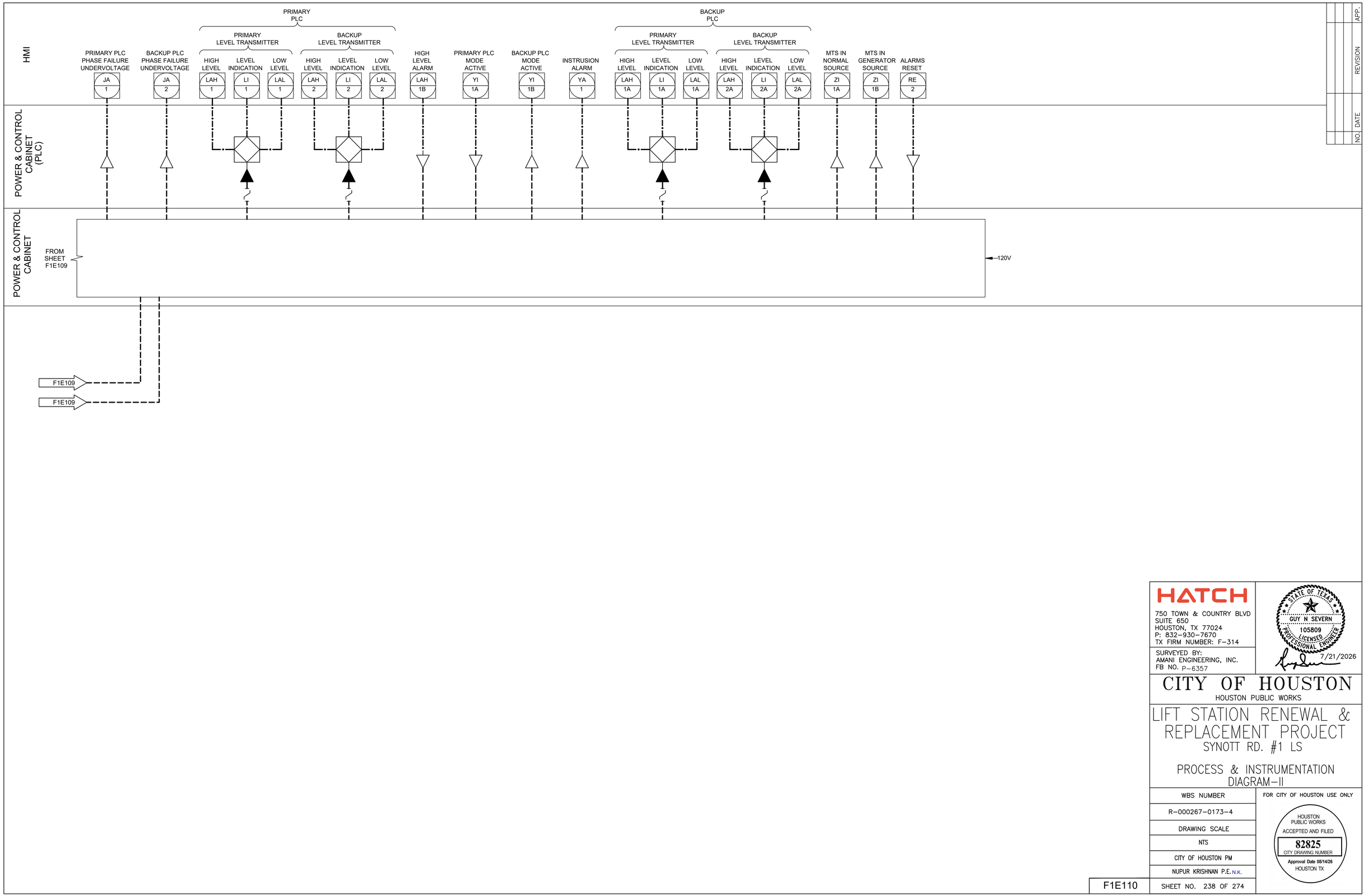

PLOTTED: 8/11/2026 11:59 AM

PLOT STYLE: COH.ctb

FILE PATH: \\wusppplot01\d$\Global ProjectWise Plotting - WUS\Queue 5\queue5.dwg

HATCH
750 TOWN & COUNTRY BLVD
SUITE 650
HOUSTON, TX 77024
P: 832-930-7670
TX FIRM NUMBER: F-314

SURVEYED BY:
AMANI ENGINEERING, INC.
FB NO. P-6357

STATE OF TEXAS
GUY N SEVERN
105809
LICENSED
PROFESSIONAL ENGINEER
7/21/2026

CITY OF HOUSTON

HOUSTON PUBLIC WORKS

LIFT STATION RENEWAL & REPLACEMENT PROJECT

SYNOTT RD. #1 LS

PROCESS & INSTRUMENTATION DIAGRAM-II

WBS NUMBER
R-000267-0173-4
DRAWING SCALE
NTS
CITY OF HOUSTON PM
NUPUR KRISHNAN P.E. N.K.

FOR CITY OF HOUSTON USE ONLY

HOUSTON PUBLIC WORKS
ACCEPTED AND FILED
82825
CITY DRAWING NUMBER
Approval Date 08/14/26
HOUSTON TX

F1E110

SHEET NO. 238 OF 274

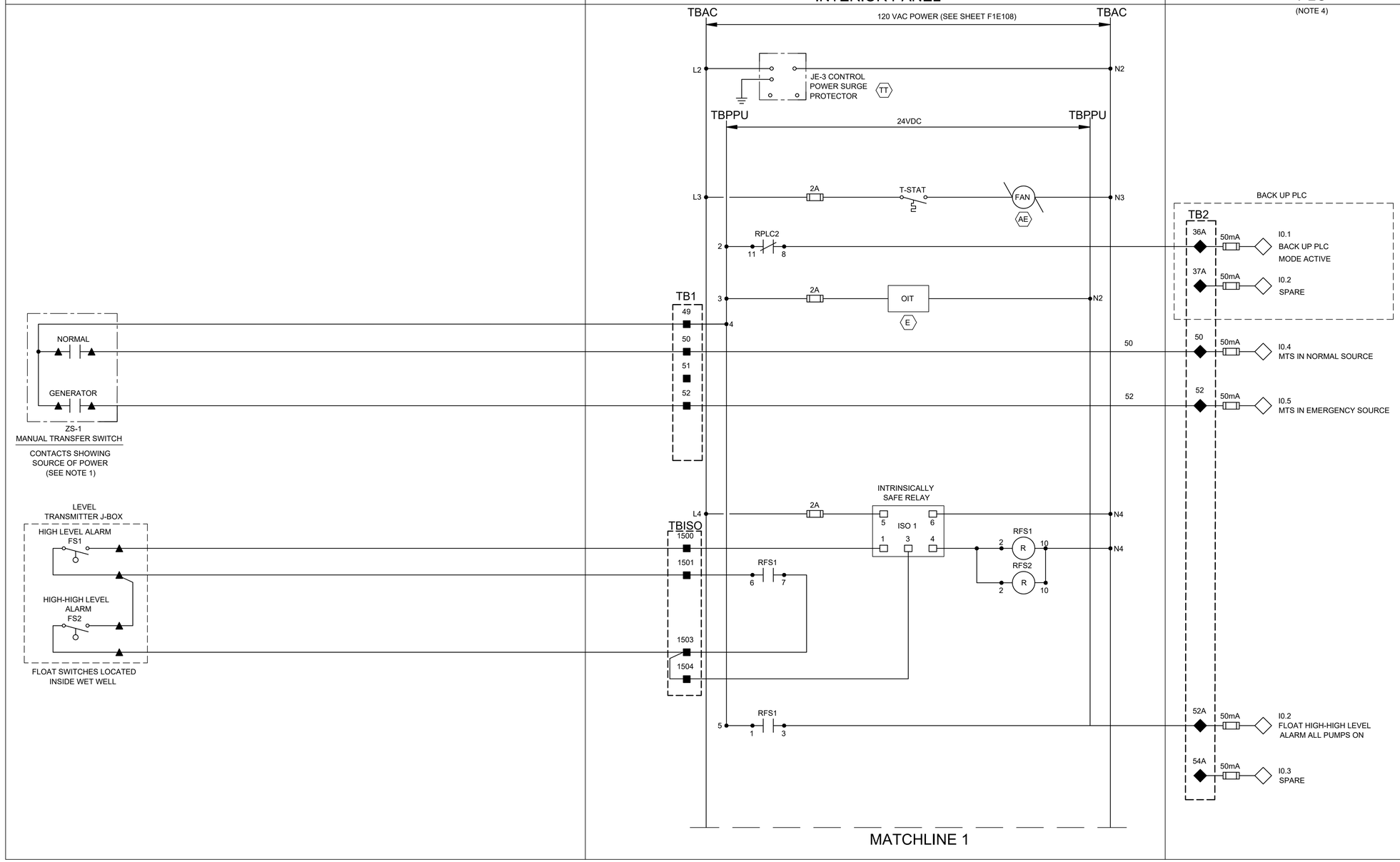

NOTES:

1. PROVIDE MANUAL TRANSFER SWITCH DRY CONTACT.
2. ALL FLOAT CONTROL CIRCUIT WIRES COLOR SHALL BE YELLOW.
3. SEE SHEET F1E102 FOR EQUIPMENT AND DEVICE SCHEDULE.
4. PRIMARY PLC UNLESS INDICATED OTHERWISE.

LEGEND

- △ DEVICE OR FIELD TERMINAL LOCATED AT MOTOR
- ✳ DEVICE OR FIELD TERMINAL LOCATED REMOTE
- □ DEVICE OR FIELD TERMINAL LOCATED AT MCC/POWER PANEL
- ■ FIELD TERMINAL LOCATED AT CONTROL PANEL
- ▲ REMOTE TERMINAL
- ● DEVICE TERMINAL NO.
- ◆ PLC INTERFACE TERMINAL

NO.	DATE	REVISION	APP.

HATCH
750 TOWN & COUNTRY BLVD
SUITE 650
HOUSTON, TX 77024
P: 832-930-7670
TX FIRM NUMBER: F-314

SURVEYED BY:
AMANI ENGINEERING, INC.
FB NO. P-6357

STATE OF TEXAS
GUY N SEVERN
105809
LICENSED
PROFESSIONAL ENGINEER
7/21/2026

CITY OF HOUSTON
HOUSTON PUBLIC WORKS

LIFT STATION RENEWAL & REPLACEMENT PROJECT
SYNOTT RD. #1 LS

POWER & CONTROL CABINET
CONTROL WIRING DIAGRAM-I

WBS NUMBER
R-000267-0173-4
DRAWING SCALE
NTS
CITY OF HOUSTON PM
NUPUR KRISHNAN P.E. N.K.
SHEET NO. 239 OF 274

FOR CITY OF HOUSTON USE ONLY

HOUSTON
PUBLIC WORKS
ACCEPTED AND FILED
82825
CITY DRAWING NUMBER
Approval Date 08/14/26
HOUSTON TX

F1E111

PLOTTED: 8/11/2026 11:59 AM
PLOT STYLE: COH.ctb
FILE PATH: \\wuspplot01\d$\Global ProjectWise Plotting - WUS\Queue 1\queue1.dwg

PLOT STYLE: COH.ctb
PLOTTED: 8/11/2026 11:56 AM
FILE PATH: \\wusppplot01\d$\Global ProjectWise Plotting - WUS\Queue 5\queue5.dwg

NO.	DATE	REVISION	APP.

FIELD

POWER & CONTROL CABINET

INTERIOR PANEL

PLC
(NOTE 2)

TBAC TPPU MATCHLINE 1 TPPU TBAC

120 VAC POWER

24VDC

RADAR LEVEL TRANSMITTER JUNCTION BOX

MFG. CABLE

PRIMARY RADAR LEVEL TRANSMITTER

LT-1

MFG. CABLE

BACKUP RADAR LEVEL TRANSMITTER

LT-2

11

1001

1001A

12

1003

1003A

TB1

1004

1

24-

1002

24V-

2

11

1001

1001A

12

1003

1003A

6

N3

RBRM1

5

2 R 10

N4

RBRM2

6

2 R 10

N5

RBRM3

7

2 R 10

N6

ANALOG ISOLATOR (YY)

1 2 + - 3 4 5 6

7

8

9

ANALOG ISOLATOR (YY)

1 2 + - 3 4 5 6

N7

ANALOG I/O SURGE SUPPRESSOR (CC)

5 6 7 8 1 2 3 4

24V+

1001B

24V+

1003B

BACK UP PLC

TB2

L+			CPU POWER
M			CPU COMMON
35B	1A		QO.0 PUMP NO.1 CALL TO RUN
38B	1A		QO.1 PUMP NO.2 CALL TO RUN
41B	1A		QO.2 PUMP NO.3 CALL TO RUN
47B	1A		QO.4 SPARE
13B	50mA	+	AIO.0 PRIMARY WET WELL LEVEL TRANSMITTER
13AB		-	
13GB			
L+			CPU POWER
M			CPU COMMON
14B	50mA	+	AIO.2 BACKUP WET WELL LEVEL TRANSMITTER
14A		-	
14GB			
L+			CPU POWER
M			CPU COMMON
13	50mA	+	AIO.0 PRIMARY WET WELL LEVEL TRANSMITTER
13A		-	
13G			
14	50mA	+	AIO.2 BACKUP WET WELL LEVEL TRANSMITTER
14A		-	
14G			

MATCHLINE 2

NOTES:

1. SEE SHEET F1E102 FOR EQUIPMENT AND DEVICE SCHEDULE.
2. PRIMARY PLC UNLESS INDICATED OTHERWISE.

LEGEND

- △ DEVICE OR FIELD TERMINAL LOCATED AT MOTOR
- ✳ DEVICE OR FIELD TERMINAL LOCATED REMOTE
- □ DEVICE OR FIELD TERMINAL LOCATED AT MCC/POWER PANEL
- ■ FIELD TERMINAL LOCATED AT CONTROL PANEL
- ▲ REMOTE TERMINAL
- ● DEVICE TERMINAL NO.
- ◆ PLC INTERFACE TERMINAL

HATCH
750 TOWN & COUNTRY BLVD
SUITE 650
HOUSTON, TX 77024
P: 832-930-7670
TX FIRM NUMBER: F-314

SURVEYED BY:
AMANI ENGINEERING, INC.
FB NO. P-6357

STATE OF TEXAS
GUY N SEVERN
105809
LICENSED
PROFESSIONAL ENGINEER
7/21/2026

CITY OF HOUSTON

HOUSTON PUBLIC WORKS

LIFT STATION RENEWAL & REPLACEMENT PROJECT

SYNOTT RD. #1 LS

POWER & CONTROL CABINET CONTROL WIRING DIAGRAM-II

WBS NUMBER
R-000267-0173-4
DRAWING SCALE
NTS
CITY OF HOUSTON PM
NUPUR KRISHNAN P.E. N.K.
SHEET NO. 240 OF 274

FOR CITY OF HOUSTON USE ONLY

HOUSTON PUBLIC WORKS
ACCEPTED AND FILED
82825
CITY DRAWING NUMBER
Approval Date 08/14/26
HOUSTON TX

F1E112

PLOT STYLE: COH.ctb
PLOTTED: 8/11/2026 11:54 AM
FILE PATH: \\wuspplot01\d$\Global ProjectWise Plotting - WUS\Queue 4\queue4.dwg

FIELD	POWER SIDE BACK PANEL	POWER&CONTROL CABINET		
		DOOR PANEL	INTERIOR PANEL	PLC (NOTE 2)

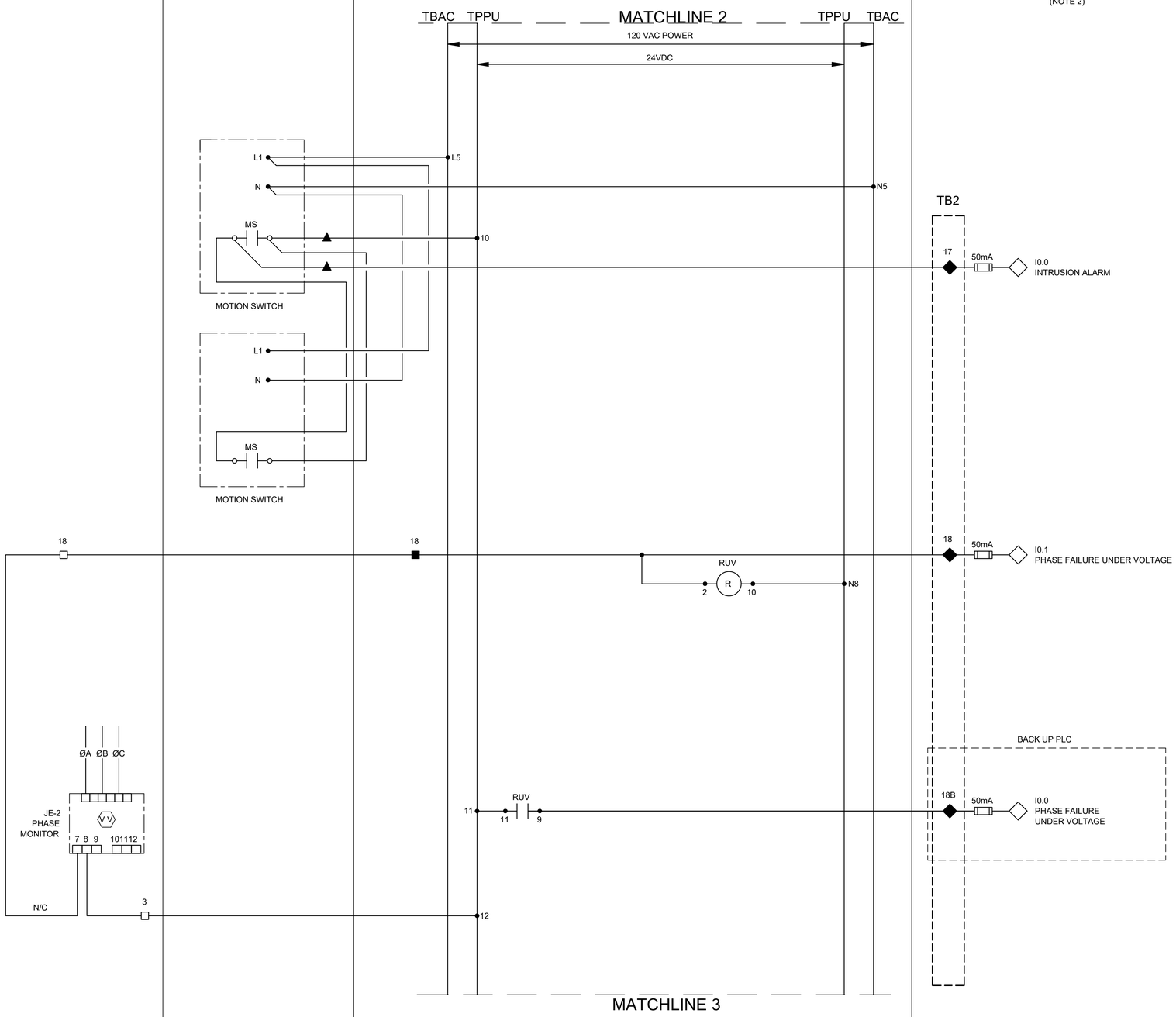

NOTES:

1. PROVIDE ONE LIMIT SWITCH PER EXTERIOR CONTROL PANEL AND POWER PANEL DOOR, WIRED IN PARALLEL.
2. PRIMARY PLC UNLESS INDICATED OTHERWISE.

LEGEND

- △ DEVICE OR FIELD TERMINAL LOCATED AT MOTOR
- ✳ DEVICE OR FIELD TERMINAL LOCATED REMOTE
- □ DEVICE OR FIELD TERMINAL LOCATED AT MCC/POWER PANEL
- ■ FIELD TERMINAL LOCATED AT CONTROL PANEL
- ▲ REMOTE TERMINAL
- ● DEVICE TERMINAL NO.
- ◆ PLC INTERFACE TERMINAL

NO.	DATE	REVISION	APP.

HATCH
750 TOWN & COUNTRY BLVD
SUITE 650
HOUSTON, TX 77024
P: 832-930-7670
TX FIRM NUMBER: F-314

SURVEYED BY:
AMANI ENGINEERING, INC.
FB NO. P-6357

STATE OF TEXAS
GUY N SEVERN
105809
LICENSED
PROFESSIONAL ENGINEER
7/21/2026

CITY OF HOUSTON
HOUSTON PUBLIC WORKS

LIFT STATION RENEWAL & REPLACEMENT PROJECT
SYNOTT RD. #1 LS

POWER & CONTROL CABINET CONTROL WIRING DIAGRAM-III

WBS NUMBER
R-000267-0173-4
DRAWING SCALE
NTS
CITY OF HOUSTON PM
NUPUR KRISHNAN P.E. N.K.
SHEET NO. 241 OF 274

FOR CITY OF HOUSTON USE ONLY

HOUSTON PUBLIC WORKS
ACCEPTED AND FILED
82825
CITY DRAWING NUMBER
Approval Date 08/14/26
HOUSTON TX

F1E113

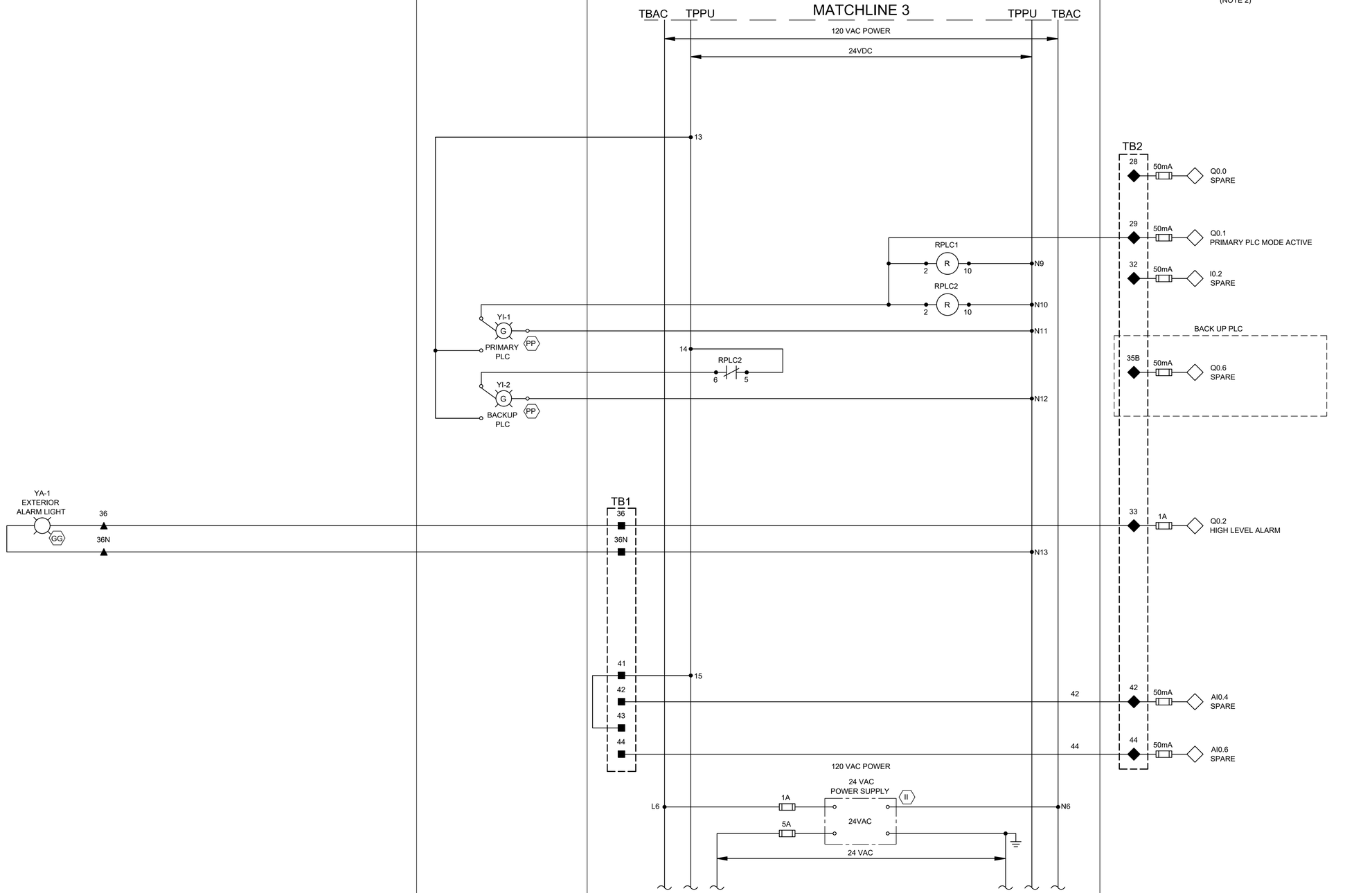

NOTES:

1. SEE SHEET F1E102 FOR EQUIPMENT AND DEVICE SCHEDULE.
2. PRIMARY PLC UNLESS INDICATED OTHERWISE.

LEGEND

- △ DEVICE OR FIELD TERMINAL LOCATED AT MOTOR
- ✳ DEVICE OR FIELD TERMINAL LOCATED REMOTE
- □ DEVICE OR FIELD TERMINAL LOCATED AT MCC/POWER PANEL
- ■ FIELD TERMINAL LOCATED AT CONTROL PANEL
- ▲ REMOTE TERMINAL
- ● DEVICE TERMINAL NO.
- ◆ PLC INTERFACE TERMINAL

NO.	DATE	REVISION	APP.

HATCH
750 TOWN & COUNTRY BLVD
SUITE 650
HOUSTON, TX 77024
P: 832-930-7670
TX FIRM NUMBER: F-314

SURVEYED BY:
AMANI ENGINEERING, INC.
FB NO. P-6357

STATE OF TEXAS
GUY N SEVERN
105809
LICENSED
PROFESSIONAL ENGINEER
7/21/2026

CITY OF HOUSTON
HOUSTON PUBLIC WORKS

LIFT STATION RENEWAL & REPLACEMENT PROJECT
SYNOTT RD. #1 LS

POWER & CONTROL CABINET
CONTROL WIRING DIAGRAM-IV

WBS NUMBER
R-000267-0173-4
DRAWING SCALE
NTS
CITY OF HOUSTON PM
NUPUR KRISHNAN P.E. N.K.

FOR CITY OF HOUSTON USE ONLY

HOUSTON PUBLIC WORKS
ACCEPTED AND FILED
82825
CITY DRAWING NUMBER
Approval Date 08/14/26
HOUSTON TX

F1E114

SHEET NO. 242 OF 274

PLOTTED: 8/11/2026 11:53 AM
PLOT STYLE: COH.ctb
FILE PATH: \\wuspplot01\d$\Global ProjectWise Plotting - WUS\Queue 5\queue5.dwg

FIELD

POWER & CONTROL CABINET

POWER SIDE BACK PANEL

DOOR PANEL

INTERIOR PANEL

PLC

TB3

TB1

TBAC

TB4

120 VAC POWER

24 VDC

24 VAC

TB2

L1A

L1N

3A

TSH-1
MOTOR TEMP
SWITCH

LSH-1 SEAL
LEAK
DETECTOR

TERMINAL
JUNCTION BOX

PUMP
NO.1

REFER TO
SHEET F1E106

4-20mA
CURRENT
TRANSDUCER

IE-1
MOTOR OVERLOAD RELAY
(MOR) (SEE NOTE 1)

HS-1A
RESET

TO SHEET F1E116

HS-1
H-O-A

RRST1

RMSL1

RMTH1

RFS1

TDFRM1

RPLC1

RBRM1

RPLM1

RMOR1

PUMP NO. 1
PROTECTION MODULE
LAH-1
SL1
TAH-1
MTH1

M1

MOR1

ZS-1

YI-1
RUN

Q0.4
ALARM RESET

I0.6
ALARM RESET

I1.1
PUMP NO.1
HIGH TEMP
ALARM

AI0.8
PUMP NO.1
MOTOR CURRENT

I3.3
PUMP NO.1
MOTOR OVERLOAD

I3.0
PUMP NO.1
IN HAND

I3.1
PUMP NO.1
IN AUTO

Q0.7
PUMP NO.1
PLC START/STOP

I1.0
PUMP NO.1
RUN

I3.2
PUMP NO.1
SEAL FAILURE
ALARM

NOTES:

1. MOTOR OVERLOAD RELAY OUTPUT CONTACT SHOWN IS NORMALLY CLOSED WHEN RELAY IS DE-ENERGIZED, OPEN WHEN ENERGIZED, AND CLOSED WHEN IN ALARM. VERIFY OPERATION OF RELAY PROVIDED AND ADJUST CONNECTION OF RMOR AUXILIARY RELAYS.
2. SEE SHEET F1E102 FOR EQUIPMENT AND DEVICE SCHEDULE.
3. ALL FLOAT CONTROL CIRCUIT WIRES COLOR SHALL BE YELLOW.

LEGEND

- △ DEVICE OR FIELD TERMINAL LOCATED AT MOTOR
- ✳ DEVICE OR FIELD TERMINAL LOCATED REMOTE
- □ DEVICE OR FIELD TERMINAL LOCATED AT MCC/POWER PANEL
- ■ FIELD TERMINAL LOCATED AT CONTROL PANEL
- ▲ REMOTE TERMINAL
- ● DEVICE TERMINAL NO.
- ◆ PLC INTERFACE TERMINAL

NO.	DATE	REVISION	APP.

HATCH
750 TOWN & COUNTRY BLVD
SUITE 650
HOUSTON, TX 77024
P: 832-930-7670
TX FIRM NUMBER: F-314

SURVEYED BY:
AMANI ENGINEERING, INC.
FB NO. P-6357

STATE OF TEXAS
GUY N SEVERN
105809
LICENSED
PROFESSIONAL ENGINEER
7/21/2026

CITY OF HOUSTON

HOUSTON PUBLIC WORKS

LIFT STATION RENEWAL & REPLACEMENT PROJECT
SYNOTT RD. #1 LS

PUMP NO.1
CONTROL WIRING DIAGRAM

WBS NUMBER
R-000267-0173-4
DRAWING SCALE
NTS
CITY OF HOUSTON PM
NUPUR KRISHNAN P.E. N.K.
SHEET NO. 243 OF 274

FOR CITY OF HOUSTON USE ONLY

HOUSTON
PUBLIC WORKS
ACCEPTED AND FILED
82825
CITY DRAWING NUMBER
Approval Date 08/14/26
HOUSTON TX

F1E115

PLOTTED: 8/11/2026 11:54 AM

PLOT STYLE: COH.ctb

FILE PATH: \\wusppplot01\d$\Global ProjectWise Plotting - WUS\Queue 2\queue2.dwg

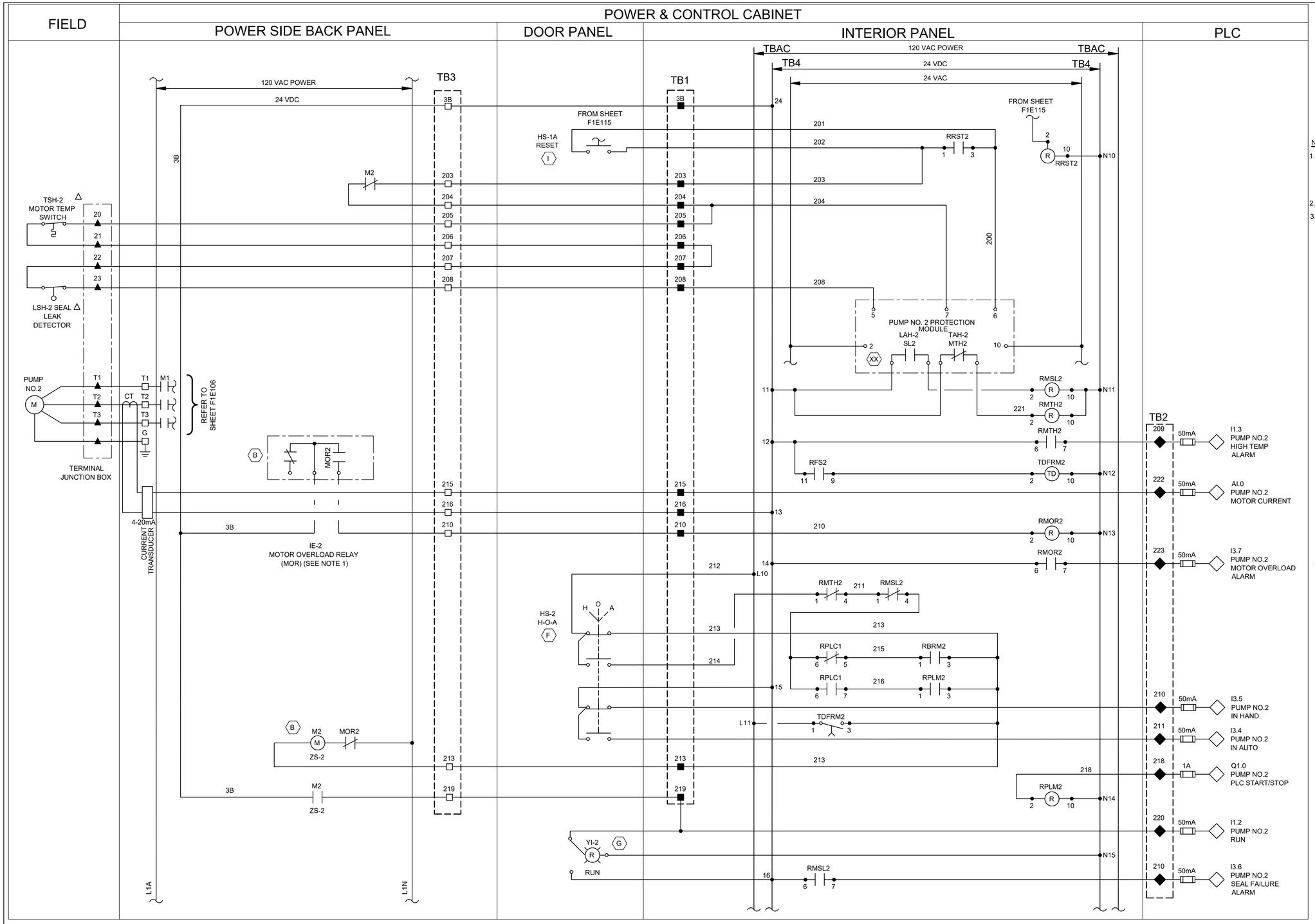

NOTES:

1. MOTOR OVERLOAD RELAY OUTPUT CONTACT SHOWN IS NORMALLY CLOSED WHEN RELAY IS DE-ENERGIZED, OPEN WHEN ENERGIZED, AND CLOSED WHEN IN ALARM. VERIFY OPERATION OF RELAY PROVIDED AND ADJUST CONNECTION OF RMOR AUXILIARY RELAYS.
2. SEE SHEET F1E102 FOR EQUIPMENT AND DEVICE SCHEDULE.
3. ALL FLOAT CONTROL CIRCUIT WIRES COLOR SHALL BE YELLOW.

LEGEND:

- △ DEVICE OR FIELD TERMINAL LOCATED AT MOTOR
- ✳ DEVICE OR FIELD TERMINAL LOCATED REMOTE
- □ DEVICE OR FIELD TERMINAL LOCATED AT MCC/POWER PANEL
- ■ FIELD TERMINAL LOCATED AT CONTROL PANEL
- ▲ REMOTE TERMINAL
- ● DEVICE TERMINAL NO.
- ◆ PLC INTERFACE TERMINAL

NO.	DATE	REVISION	APP.

HATCH
750 TOWN & COUNTRY BLVD
SUITE 650
HOUSTON, TX 77024
P: 832-930-7670
TX FIRM NUMBER: F-314

SURVEYED BY:
AMANI ENGINEERING, INC.
FB NO. P-6357

STATE OF TEXAS
GUY N SEVERN
105809
LICENSED PROFESSIONAL ENGINEER
7/21/2026

CITY OF HOUSTON
HOUSTON PUBLIC WORKS

LIFT STATION RENEWAL & REPLACEMENT PROJECT
SYNOTT RD. #1 LS

PUMP NO.2 CONTROL WIRING DIAGRAM

WBS NUMBER	FOR CITY OF HOUSTON USE ONLY
R-000267-0173-4	HOUSTON PUBLIC WORKS ACCEPTED AND FILED 82825 CITY DRAWING NUMBER Approval Date 08/14/26 HOUSTON TX
DRAWING SCALE	
NTS	
CITY OF HOUSTON PM	
NUPUR KRISHNAN P.E. N.K.	
SHEET NO. 244 OF 274	

F1E116

PLOTTED: 8/11/2026 11:57 AM
PLOT STYLE: COH.ctb
FILE PATH: \\wusppplot01\d$\Global ProjectWise Plotting - WUS\Queue 3\queue3.dwg

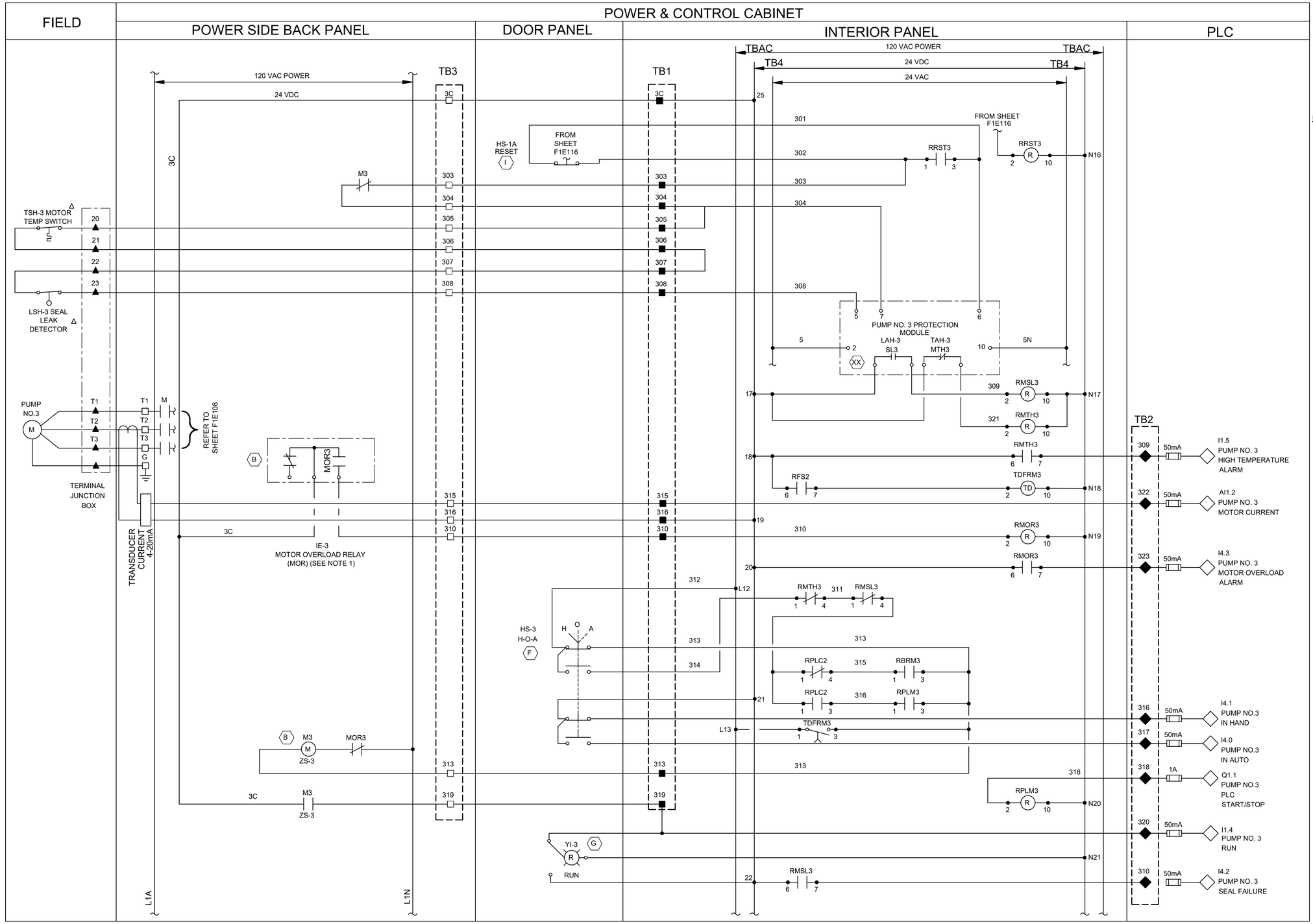

NOTES:

1. MOTOR OVERLOAD RELAY OUTPUT CONTACT SHOWN NORMALLY CLOSED WHEN RELAY IS DE-ENERGIZED, OPEN WHEN ENERGIZED, AND CLOSED WHEN IN ALARM. VERIFY OPERATION OF RELAY PROVIDED AND ADJUST CONNECTION OF RMOR AUXILIARY RELAYS.
2. SEE SHEET F1E102 FOR EQUIPMENT AND DEVICE SCHEDULE.
3. ALL FLOAT CONTROL CIRCUIT WIRES COLOR SHALL BE YELLOW.

LEGEND

- △ DEVICE OR FIELD TERMINAL LOCATED AT MOTOR
- ✳ DEVICE OR FIELD TERMINAL LOCATED REMOTE
- □ DEVICE OR FIELD TERMINAL LOCATED AT MCC/POWER PANEL
- ■ FIELD TERMINAL LOCATED AT CONTROL PANEL
- ▲ REMOTE TERMINAL
- ● DEVICE TERMINAL NO.
- ◆ PLC INTERFACE TERMINAL

NO.	DATE	REVISION	APP.

HATCH
750 TOWN & COUNTRY BLVD
SUITE 650
HOUSTON, TX 77024
P: 832-930-7670
TX FIRM NUMBER: F-314

SURVEYED BY:
AMANI ENGINEERING, INC.
FB NO. P-6357

STATE OF TEXAS
GUY N SEVERN
105809
LICENSED PROFESSIONAL ENGINEER
7/21/2026

CITY OF HOUSTON
HOUSTON PUBLIC WORKS

LIFT STATION RENEWAL & REPLACEMENT PROJECT
SYNOTT RD. #1 LS

PUMP NO.3 CONTROL WIRING DIAGRAM

WBS NUMBER	FOR CITY OF HOUSTON USE ONLY
R-000267-0173-4	HOUSTON PUBLIC WORKS ACCEPTED AND FILED 82825 CITY DRAWING NUMBER Approval Date 08/14/26 HOUSTON TX
DRAWING SCALE	
NTS	
CITY OF HOUSTON PM	
NUPUR KRISHNAN P.E. N.K.	
SHEET NO. 245 OF 274	

F1E117

PLOTTED: 8/11/2026 11:57 AM
PLOT STYLE: COH.ctb
FILE PATH: \\wusppplot01\d$\Global ProjectWise Plotting - WUS\Queue 2\queue2.dwg

	DESCRIPTION	SERVICE		ROUTING			WIRE SIZE & CONDUIT
		VOLTAGE	AMPS OR HP	FROM	TO	VIA	
100	SERVICE ENTRANCE	480VAC	100A	UTILITY POWER SERVICE	METER DISCONNECT	--	SEE DETAIL Z0E128
100A	SERVICE POWER	480VAC	100A	MANUAL TRANSFER SWITCH	POWER BACK PANEL (POWER & CONTROL CABINET)	RIGID CONDUIT/DUCT BANK	4#4 / 1#4G, 2"C
100B	NORMAL/EMERGENCY POWER STATUS	24VDC	--	MANUAL TRANSFER SWITCH	CONTROL BACK PANEL (POWER & CONTROL CABINET)	RIGID CONDUIT/DUCT BANK	2#14, 3/4"C
101	GROUND ELECTRODE CONDUCTOR	--	--	POWER AREA (POWER & CONTROL CABINET)	GROUND FIELD	--	1#8G
104	GROUND ELECTRODE CONDUCTOR	--	--	CONTROL AREA (POWER & CONTROL CABINET)	GROUND FIELD	--	1#8G
105	COMMUNICATION	--	--	COMMUNICATION POLE	PPU-AC PANEL	RIGID CONDUIT/DUCT BANK	ETHERNET CABLE, 3/4"C
105A	COMMUNICATION POLE LIGHT	120V	--	POLE SWITCH LIGHT	LIGHTING PANEL (POWER & CONTROL CABINET)	RIGID CONDUIT/DUCT BANK	2#12 / 1#12G, 3/4"C
200	PUMP NO. 1 POWER	480VAC	17 HP	PUMP NO. 1	PUMP NO. 1 JUNCTION BOX	RIGID CONDUIT/DUCT BANK	MFR CABLE, 2-1/2"C (SEE NOTE 2)
201	PUMP NO. 1 CONTROLS	120V	--	PUMP NO. 1	PUMP NO. 1 JUNCTION BOX	RIGID CONDUIT/DUCT BANK	INCL IN MFR CABLE, 2-1/2"C (SEE NOTE 2)
202	PUMP NO. 1 POWER	480VAC	17 HP	PUMP NO. 1 JUNCTION BOX	PUMP STARTER (POWER & CONTROL CABINET)	RIGID CONDUIT	3#10 / 1#10G, 1"C
203	COMBINED PUMP CONTROLS	120V	--	PUMP NO. 1 JUNCTION BOX	PUMP STARTER (POWER & CONTROL CABINET)	RIGID CONDUIT	(COMBINE 201 & 301) 8#14, 1"C
300	PUMP NO. 2 POWER	480VAC	17 HP	PUMP NO. 2	PUMP NO. 2 JUNCTION BOX	RIGID CONDUIT/DUCT BANK	MFR CABLE, 2-1/2"C (SEE NOTE 2)
301	PUMP NO. 2 CONTROLS	120V	--	PUMP NO. 2	PUMP NO. 2 JUNCTION BOX	RIGID CONDUIT/DUCT BANK	INCL IN MFR CABLE, 2-1/2"C (SEE NOTE 2)
302	PUMP NO. 2 POWER	480VAC	17 HP	PUMP NO. 2 JUNCTION BOX	PUMP STARTER (POWER & CONTROL CABINET)	RIGID CONDUIT	3#10 1#10G, 1"C
400	PUMP NO. 3 POWER	480VAC	17 HP	PUMP NO. 3	PUMP NO. 3 JUNCTION BOX	RIGID CONDUIT/DUCT BANK	MFR CABLE, 2-1/2"C (SEE NOTE 2)
401	PUMP NO. 3 CONTROLS	120V	--	PUMP NO. 3	PUMP NO. 3 JUNCTION BOX	RIGID CONDUIT/DUCT BANK	INCL MFR CABLE, 2-1/2"C (SEE NOTE 2)
402	PUMP NO. 3 POWER	480VAC	17 HP	PUMP NO. 3 JUNCTION BOX	PUMP STARTER (POWER & CONTROL CABINET)	RIGID CONDUIT	3#10 1#10G, 1"C
403	PUMP NO. 3 CONTROLS	120V	17 HP	PUMP NO. 3 JUNCTION BOX	CONTROL PANEL (POWER & CONTROL CABINET)	RIGID CONDUIT	4#14, 1"C
1000	LEVEL TRANSMITTER LT-1	24VDC	--	LEVEL TRANSMITTER LT-1	TRANSMITTER JUNCTION BOX	RIGID CONDUIT/DUCT BANK	INCL IN MFR CABLE, 2-1/2"C (SEE NOTE 2)
1001	LEVEL TRANSMITTER LT-2	24VDC	--	LEVEL TRANSMITTER LT-2	TRANSMITTER JUNCTION BOX	RIGID CONDUIT/DUCT BANK	INCL IN MFR CABLE, 2-1/2"C (SEE NOTE 2)
1002	COMBINED LEVEL TRANSMITTERS & FLOAT SWITCH	24VDC	--	TRANSMITTER JUNCTION BOX	POWER & CONTROL CABINET	RIGID CONDUIT	COMBINE 1000/1001/1003, 4#14+2#14G / 4#14, 2"C
1003	WELL FLOAT SWITCHES	24VDC	--	TRANSMITTER JUNCTION BOX	FLOAT SWITCH NO.1 & NO.2	RIGID CONDUIT/DUCT BANK	MFR CABLE, 2-1/2" CONDUIT (SEE NOTE 2)
1100	120VAC FOR RECEPTACLE	120V	--	LIGHTING PANEL (POWER & CONTROL CABINET)	RECEPTACLE NEXT TO PUMP NO.3 J-BOX	RIGID CONDUIT	L5 (OUT.), 2#12 #12G, 3/4"C
1101	COMMUNICATION POLE LIGHTING SWITCH	120V	--	LIGHTING PANEL (POWER & CONTROL CABINET)	POLE SWITCH LIGHT	RIGID CONDUIT	L8 (OUT.), 2#12 #12G, 3/4"C,
1102	ELECTRICAL PLATFORM LIGHT	120V	--	LIGHTING PANEL (POWER & CONTROL CABINET)	SWITCH LIGHT (ELECTRICAL PLATFORM LIGHT)	RIGID CONDUIT	L10, 2#12 / 1#12G, 1/2"C / 1-1/2"C

NOTES:

1. CONDUITS LABELED "FUTURE SPACE" ARE TO BE INSTALLED AND CAPPED IN FIELD.
2. ANY CONDUIT REQUIRING A CSBE SEAL, SHALL BE A MINIMUM SIZE OF 2 1/2".
3. ALL UNDERGROUND CONDUITS (SINGLE AND MULTI-RUN) SHALL BE MINIMUM 2 INCHES AND SHALL BE ENCASED IN REINFORCED CONCRETE DUCTBANK.

NO.	DATE	REVISION	APP.

HATCH
750 TOWN & COUNTRY BLVD
SUITE 650
HOUSTON, TX 77024
P: 832-930-7670
TX FIRM NUMBER: F-314

SURVEYED BY:
AMANI ENGINEERING, INC.
FB NO. P-6357

STATE OF TEXAS
GUY N SEVERN
105809
LICENSED
PROFESSIONAL ENGINEER
7/21/2026

CITY OF HOUSTON
HOUSTON PUBLIC WORKS

LIFT STATION RENEWAL & REPLACEMENT PROJECT
SYNOTT RD. #1 LS

ELECTRICAL CONDUIT SCHEDULE

WBS NUMBER
R-000267-0173-4
DRAWING SCALE
NTS
CITY OF HOUSTON PM
NUPUR KRISHNAN P.E. N.K.

FOR CITY OF HOUSTON USE ONLY

HOUSTON PUBLIC WORKS
ACCEPTED AND FILED
82825
CITY DRAWING NUMBER
Approval Date 08/14/26
HOUSTON TX

F1E118

SHEET NO. 246 OF 274

PLOTTED: 8/11/2026 11:56 AM
PLOT STYLE: COH.ctb
FILE PATH: \\wusppplot01\d$\Global ProjectWise Plotting - WUS\Queue 1\queue1.dwg

FILE PATH: Y:\2022071 LIFT STATIONS RENEWAL AND REPLACEMENT (HATCH) WBS NO. R-000267-0173-3\Auto CAD\Details\Gate And Fence ZOC42.dwg
PLOT STYLE: Coh_ctb_230809.ctb
PLOTTED: 6/5/2026 9:10 AM

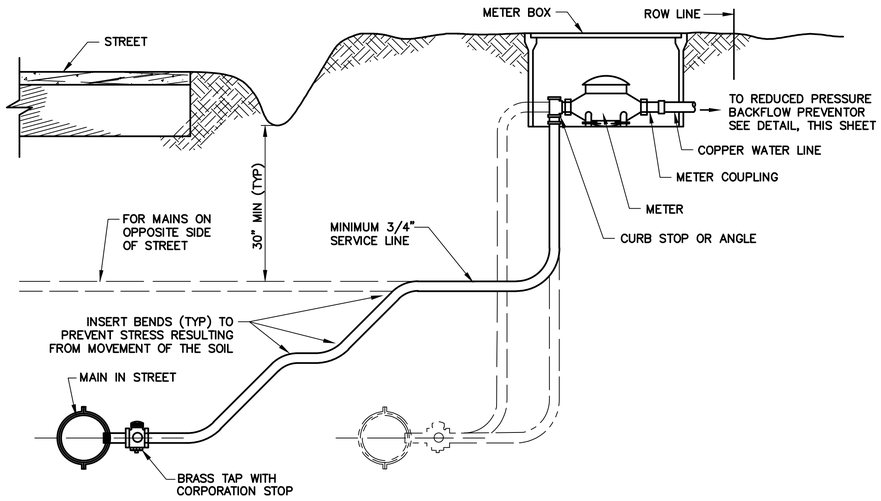

TYP WATER SERVICE LINE SECTION & METER SET DETAIL

DETAIL 15

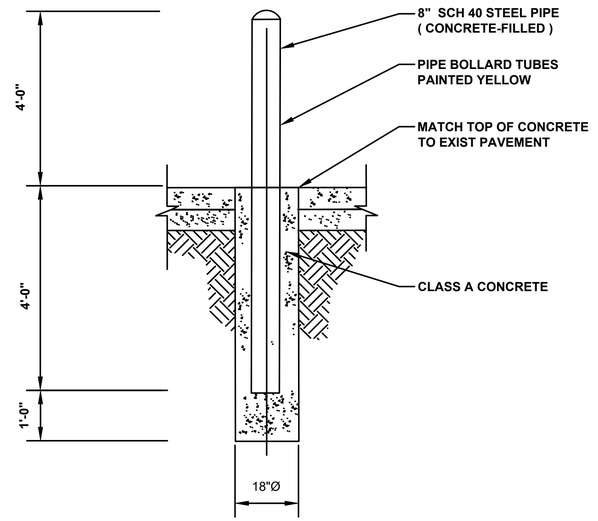

BOLLARD DETAIL 16

N.T.S

NOTES:

1. ALL FENCING SHALL BE MANUFACTURED AND INSTALLED PER SPECIFICATIONS.
2. PROVIDE ***(BLACK, DARK GREEN)*** PVC COATED FENCE FABRIC, POSTS AND HARDWARE. PROVIDE ***(REDWOOD, BLACK, DARK GREEN)*** PVC FENCE SLATS. ***(SEE NOTE C)***

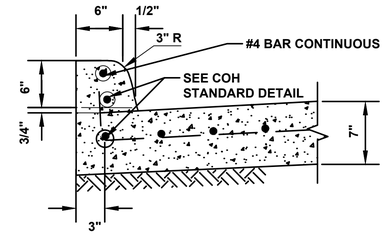

CONCRETE CURB DETAIL @ SYNOTT LIFT STATION

N.T.S

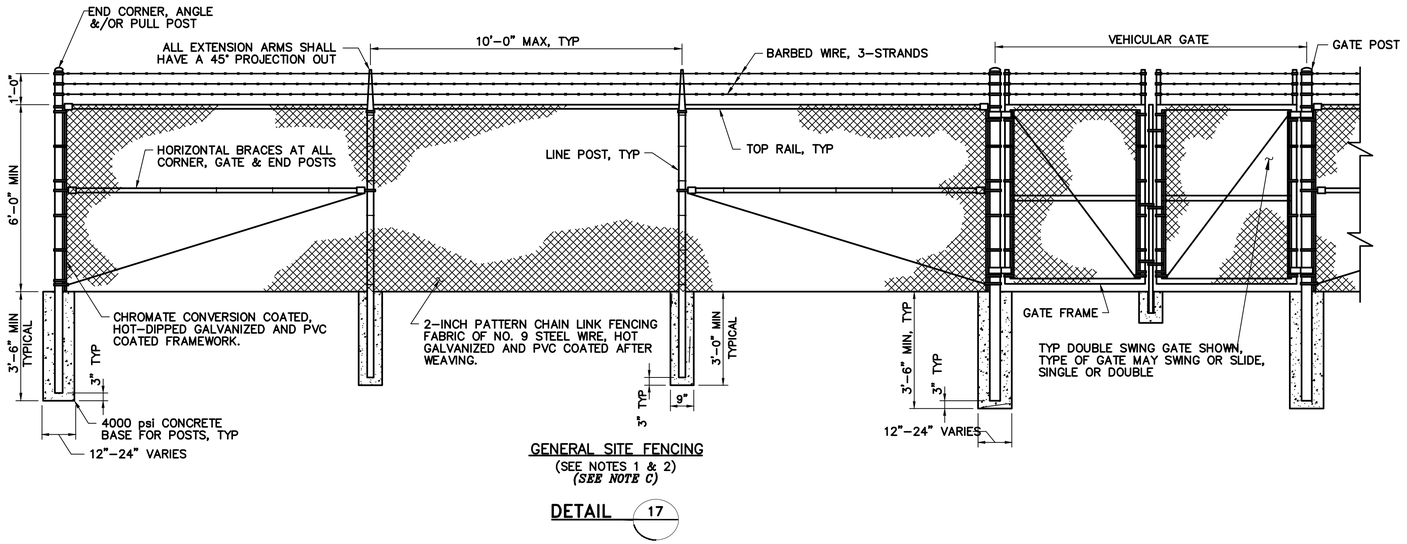

GENERAL SITE FENCING
(SEE NOTES 1 & 2)
(SEE NOTE C)

DETAIL 17

NO.	DATE	REVISION	APP.

FCM Engineers, PC
3300 S. Gessner Rd.
Suite 249
T- 713-706-4412
F- 713-706-4410
Tx Firm No. 13481

HATCH
750 TOWN & COUNTRY BLVD
SUITE 650
HOUSTON, TX 77024
P: 832-930-7670
TX FIRM NUMBER: F-314

SURVEYED BY:
AMANI ENGINEERING, INC
FB NO. P-6357

STATE OF TEXAS
FRANK C. MBACHU
108363
LICENSED PROFESSIONAL ENGINEER
5/23/2026

CITY OF HOUSTON
HOUSTON PUBLIC WORKS

LIFT STATION RENEWAL & REPLACEMENT PROJECT
TYPICAL SITE DETAILS I

WBS NUMBER	FOR CITY OF HOUSTON USE ONLY
R-000267-0173-4	HOUSTON PUBLIC WORKS ACCEPTED AND FILED 82825 CITY DRAWING NUMBER Approval Date 08/14/26 HOUSTON TX
DRAWING SCALE	
N.T.S	
CITY OF HOUSTON PM	
NUPUR KRISHNAN P.E. N.K.	

Z0C42 SHEET NO. 247 OF 274

DocuSign Envelope ID: 9B122261-CF05-457B-9A65-2650F40B66D5

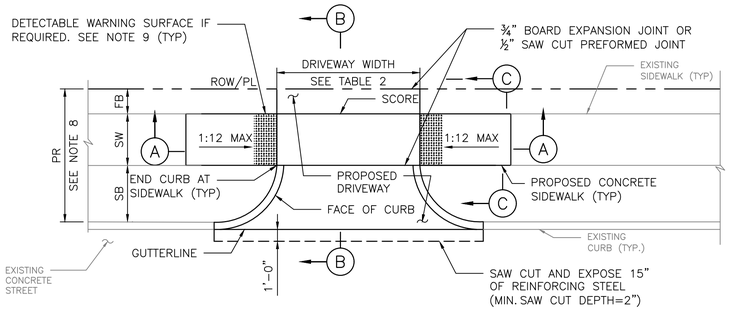

PLAN VIEW
DRIVEWAY

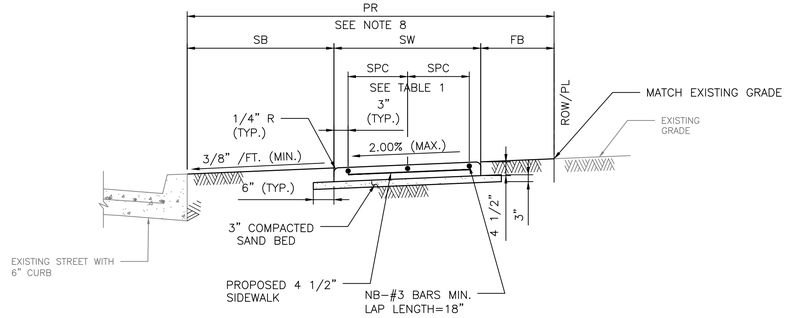

SECTION C–C
TYPICAL SIDEWALK SECTION

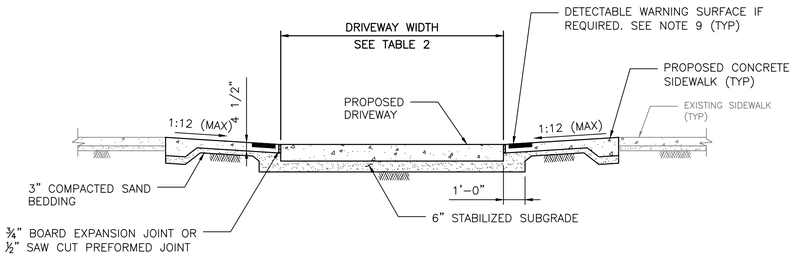

SECTION A–A
PROPOSED SIDEWALK THROUGH DRIVEWAY
WITH EXCESSIVE ELEVATION DIFFERENCE
WITH EXISTING SIDEWALK

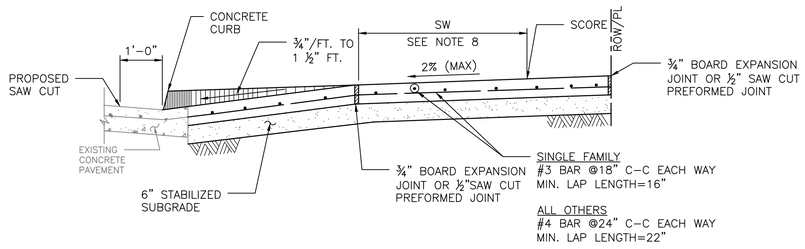

SECTION B–B
TYPICAL DRIVEWAY SECTION

NOTES:

1. REPAIR, RECONSTRUCTION OR REPLACEMENT OF SIDEWALKS SHALL MEET PERMITTING REQUIREMENTS OF CODE OF ORDINANCES SECTION 40–552.
2. FOR REPAIR, RECONSTRUCTION, OR REPLACEMENT OF EXISTING SIDEWALKS:
   - 2.1. EXISTING SIDEWALKS LESS THAN OR EQUAL TO 20 FEET IN TOTAL LENGTH:
     - 2.1.1. THE PROPOSED SIDEWALK WIDTH WILL BE ALLOWED TO MATCH THE EXISTING SIDEWALK.
   - 2.2. EXISTING SIDEWALKS GREATER THAN 20 FEET IN TOTAL LENGTH:
     - 2.2.1. THE SIDEWALK WIDTH FOR THE ENTIRE PROPERTY WIDTH SHALL BE IMPROVED TO MEET WIDTH REQUIREMENTS ACCORDING TO THE LATEST INFRASTRUCTURE DESIGN MANUAL.
   - 2.3. 20 FOOT TOTAL LENGTH IS DEFINED AS:
     - 2.3.1. UP TO 10 FEET ON BOTH SIDES OF THE DRIVEWAY; OR
     - 2.3.2. UP TO 20 FEET WHEN SIDEWALK AFFECTED IS LOCATED ONLY ON ONE SIDE OF THE DRIVEWAY.
3. ALL JOINTS ALONG THE SIDEWALK SHALL BE CONSTRUCTED ACCORDING TO DRAWING 02752–02 AND SPECIFICATION 02752.
4. DRIVEWAYS SHALL BE MINIMUM 6" THICK FOR SINGLE FAMILY AND DUPLEXES. DRIVEWAYS SHALL BE MINIMUM 7" THICK FOR ALL OTHERS (I.E. COMMERCIAL, INDUSTRIAL, ETC.)
5. DRIVEWAYS AND SIDEWALKS SHALL BE CONSTRUCTED WITH PORTLAND CEMENT CONCRETE AND INCLUDE 5 1/2 SACKS OF CEMENT PER CUBIC YARD OF CONCRETE.
6. ALL RAMPS AND SIDEWALKS/WALKWAYS SHALL BE CONSTRUCTED IN ACCORDANCE WITH HOUSTON PUBLIC WORKS STANDARDS, TEXAS ACCESSIBILITY STANDARDS (TAS) AND AMERICANS WITH DISABILITIES ACT (ADA) REQUIREMENTS. IF THERE IS A CONFLICT IN THE REQUIREMENTS, THE STRICTEST REQUIREMENTS SHALL GOVERN.
7. CURB RAMPS THAT ARE STEEPER THAN A 1:12 MAX SLOPE WILL NOT BE ACCEPTED BY THE CITY OF HOUSTON.
8. REFER TO CONTRACT DRAWINGS FOR PEDESTRIAN REALM (PR), SIDEWALK (SW), FRONTAGE BUFFER (FB), AND SAFETY BUFFER (SB) WIDTHS.
9. DETECTABLE WARNING SURFACES:
   - 9.1. SIDEWALK SHALL HAVE A DETECTABLE WARNING SURFACE WHERE:
     - 9.1.1. SIDEWALK INTERSECTS TYPE C DRIVEWAYS (COMMERCIAL DRIVEWAYS) THAT ARE STOP, YIELD, OR TRAFFIC SIGNAL CONTROLLED; OR
     - 9.1.2. SIDEWALK SLOPE IS GREATER THAN 1:20 AND INTERSECTS A TYPE C DRIVEWAY (COMMERCIAL DRIVEWAY)
   - 9.2. DETECTABLE WARNING SURFACES ARE OPTIONAL WHERE SIDEWALKS INTERSECT TYPE A DRIVEWAYS (SINGLE FAMILY RESIDENTIAL HOUSES OR DUPLEXES) OR TYPE B DRIVEWAYS (SHARED ACCESS/SHARED DRIVEWAYS).
   - 9.3. REFER TO STANDARD DETAILS 02775–06 TO 02775–07 FOR DETECTABLE WARNING SURFACE STANDARDS.

TABLE 1

REINFORCING STEEL INFORMATION
FOR 4 ½ " THICK SIDEWALKS
EXPANSION JOINT SPACING = 40 FT
fc' = 3,500 PSI AND fy = 60,000 PSI
REFER TO CONTRACT DRAWINGS FOR SIDEWALKS WIDER THAN 6 FEET.

SIDEWALK THICKNESS (IN)	SIDEWALK WIDTH (FT)	LONGITUDINAL STEEL			TRANSVERSE STEEL #3 BARS SPACING (IN)
		#3 BARS			
		NO. OF BARS "NB"	SPACING "SPC" (IN)	END BAR SPACING (IN)	
4.5	5	3	27	3	48
4.5	6	4	22	3	48

TABLE 2

DRIVEWAY DESIGN CRITERIA (1)(2)

TRAFFIC TYPE	TYPE A DRIVEWAY (FOR SINGLE FAMILY RESIDENTIAL HOUSES OR DUPLEXES)				TYPE B DRIVEWAY (SHARED ACCESS/SHARED DRIVEWAY)				TYPE C DRIVEWAY (COMMERCIAL DRIVEWAY)			
	WIDTH (FT)		RADIUS (FT)		WIDTH (FT)		RADIUS (FT)		WIDTH (FT)		RADIUS (FT)	
	MIN	MAX	MIN	MAX	MIN	MAX	MIN	MAX	MIN	MAX	MIN	MAX
ONE–WAY	10	12	4	10	12(5)	16(5)	4(5)	10(5)	15	20	10	20
TWO–WAY	10(3)	24(4)	4	10	16(6)	24	4	10	24	35	10	20

(1) REFER TO INFRASTRUCTURE DESIGN MANUAL ARTICLE 15.2.07.C.1.F FOR DRIVEWAYS THAT REQUIRE A VEHICLE SWEPT PATH ANALYSIS.
(2) REFER TO INFRASTRUCTURE DESIGN MANUAL ARTCILES 15.2.07.C.1.G.(1) AND 15.2.07.C.1.G.(2) FOR TYPE 1 PAE AND TYPE 2 PAE REQUIREMENTS.
(3) THE MINIMUM WIDTH FOR JOINT ACCESS DRIVEWAY IS 12 FT.
(4) REFER TO CHAPTER 42 OF THE CODE OF ORDINANCES FOR DRIVEWAY WIDTHS FOR NARROW LOTS.
(5) ONLY MURS AND COURTYARD STYLE DEVELOPMENTS ON CORNER LOTS CAN HAVE ONE–WAY DRIVEWAYS.
(6) REFER TO CHAPTER 42, SECTION 42–146 OF THE CODE OF ORDINANCES FOR EXCEPTIONS TO THE MINIMUM DRIVEWAY WIDTH FOR SHARED DRIVEWAYS.

DISCLAIMER:
THE USE OF THIS STANDARD IS GOVERNED BY THE TEXAS ENGINEERING PRACTICE ACT. THE DESIGN REQUIREMENTS ON THIS STANDARD DO NOT PURPORT TO ADDRESS ALL OF THE SAFETY CONCERNS ASSOCIATED WITH THEIR USE. THE ENGINEER OF RECORD (EOR) IS TO REVIEW THESE DESIGN REQUIREMENTS AND BY AUTHORIZING THEIR USE, ACCEPTS RESPONSIBILITY FOR THEIR APPLICABILITY, ADEQUACY AND SAFETY. NO WARRANTY OF ANY KIND IS MADE BY THE CITY OF HOUSTON FOR ANY PURPOSES WHATSOEVER. THE CITY OF HOUSTON ASSUMES NO RESPONSIBILITY FOR INCORRECT RESULTS OR DAMAGES RESULTING FROM ITS USE.

APPROVED BY:	APPROVED BY:
DocuSigned by: Suhail Kanwar 9EF8B0C641F5478...	DocuSigned by: KHANG NGUYEN 95A29EFDA75B4CD...
CITY ENGINEER	CITY TRAFFIC ENGINEER

APPROVED BY:
DocuSigned by: Carol Haddock A83C4108728345...
DIRECTOR OF HOUSTON PUBLIC WORKS

EFF DATE: NOV–27–2023 | DWG NO: 02754–01B

HATCH
750 TOWN & COUNTRY BLVD
SUITE 650
HOUSTON, TX 77024
P: 832–930–7670
TX FIRM NUMBER: F–314

SURVEYED BY:
AMANI ENGINEERING, INC
FB NO. P–6357

STATE OF TEXAS — MARK G. SCALLY — 136279 — LICENSED PROFESSIONAL ENGINEER — 8/14/26

CITY OF HOUSTON
HOUSTON PUBLIC WORKS STANDARD

LIFT STATION RENEWAL & REPLACEMENT PROJECT

DRIVEWAY DETAIL

WBS NUMBER	FOR CITY OF HOUSTON USE ONLY
R–000267–0173–4	HOUSTON PUBLIC WORKS ACCEPTED AND FILED 82825 CITY DRAWING NUMBER Approval Date 08/14/26 HOUSTON TX
DRAWING SCALE	
NOT TO SCALE	
CITY OF HOUSTON PM	
NUPUR KRISHNAN P.E. N.K.	
SHEET NO. 248 OF 274	

Z0C43

DocuSign Envelope ID: CB71C116-B716-4899-A5EE-0D2F2CC55AF6

DISCLAIMER:
THE USE OF THIS STANDARD IS GOVERNED BY THE TEXAS ENGINEERING PRACTICE ACT. THE DESIGN REQUIREMENTS ON THIS STANDARD DO NOT PURPORT TO ADDRESS ALL OF THE SAFETY CONCERNS ASSOCIATED WITH THEIR USE. THE ENGINEER OF RECORD (EOR) IS TO REVIEW THESE DESIGN REQUIREMENTS AND BY AUTHORIZING THEIR USE, ACCEPTS RESPONSIBILITY FOR THEIR APPLICABILITY, ADEQUACY AND SAFETY. NO WARRANTY OF ANY KIND IS MADE BY THE CITY OF HOUSTON FOR ANY PURPOSES WHATSOEVER. THE CITY OF HOUSTON ASSUMES NO RESPONSIBILITY FOR INCORRECT RESULTS OR DAMAGES RESULTING FROM ITS USE.

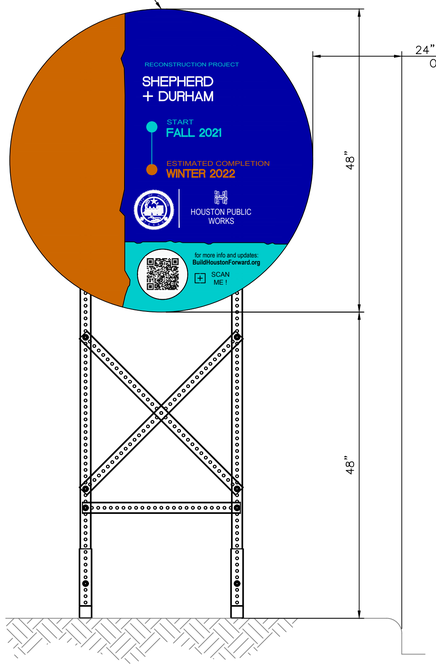

FRONT VIEW

PROJECT SIGN – 48"

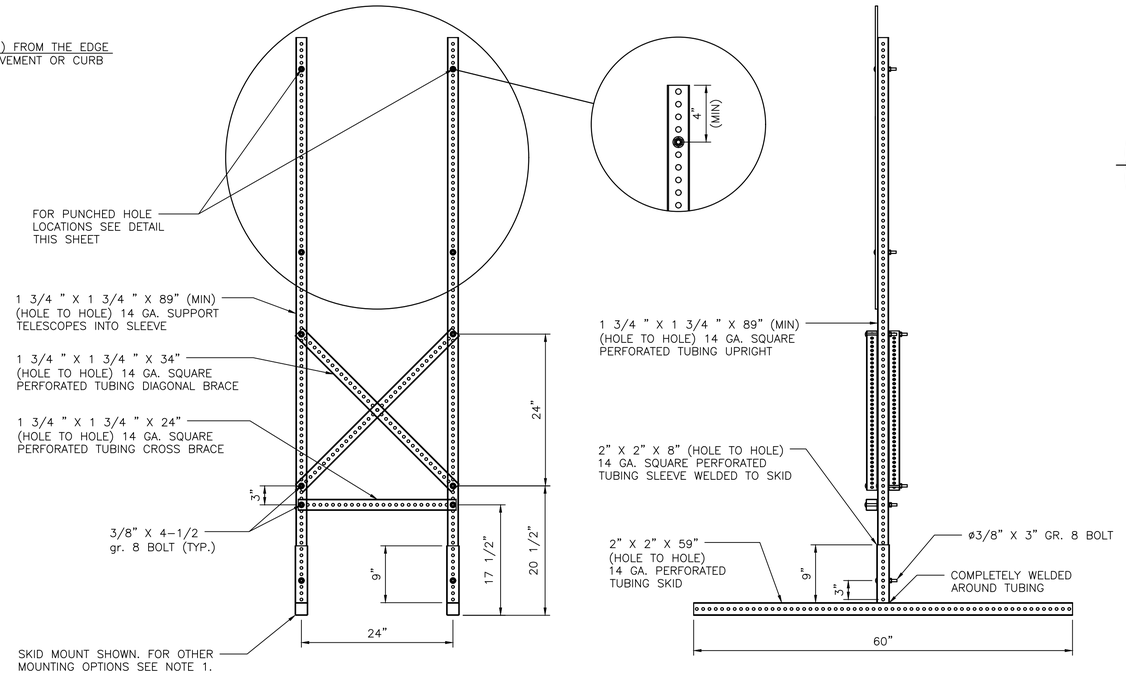

FRONT VIEW

SIDE VIEW

SKID MOUNTED SUPPORTS FOR 48" PROJECT SIGN

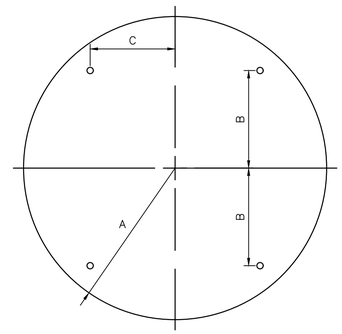

CIRCLE

A	B	C	T
24"	15"	12"	0.080"

48" SIGN PLATE HOLE DETAIL

NOTES:

1. ALLOWABLE POST INSTALLATION METHODS ARE: CONCRETE FOOTING, SURFACE MOUNTING, SKID MOUNTING AND PILE DRIVEN POSTS.
2. FOR POST INSTALLATION WITH CONCRETE FOOTING, REFER TO DETAIL 01554–01.
3. FOR SURFACE MOUNTED POST INSTALLATION, REFER TO DETAIL 01554–02.
4. FOR SKID MOUNTING REQUIREMENTS REFER TO SPECIFICATION 01582.
5. PILE DRIVEN POSTS MUST BE DRIVEN TO A MINIMUM DEPTH OF 4–FEET INTO EXISTING GROUND.
6. LAYOUT, TEXT SIZE, AND OVERALL DESIGN OF THE SIGN WILL BE THE RESPONSIBILITY OF THE BUILD HOUSTON COORDINATOR.
7. ALL SIGN POSTS, SIGN TUBING, AND SIGN FASTENERS SHALL BE GALVANIZED STEEL PER SPECIFICATION 01582.

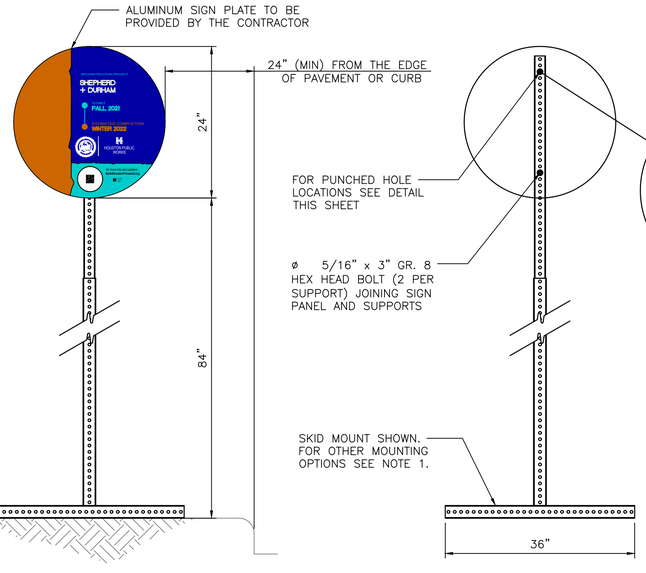

FRONT VIEW

PROJECT SIGN – 24"

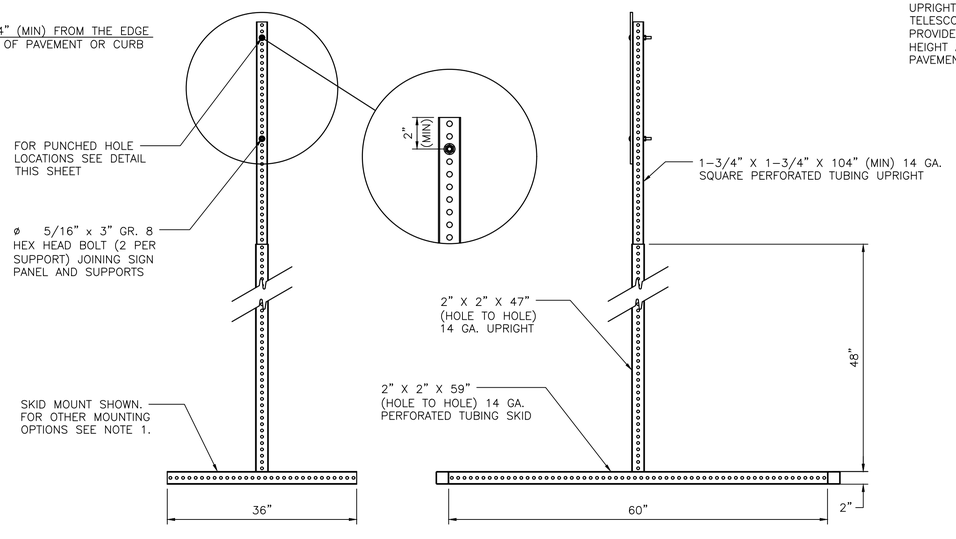

FRONT VIEW

SIDE VIEW

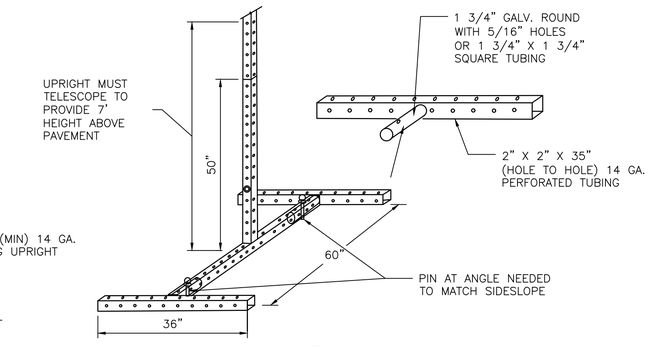

ISO VIEW

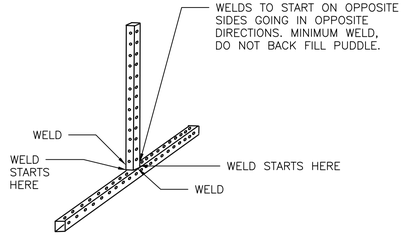

ISO VIEW

SKID MOUNTED SUPPORTS FOR 24" PROJECT SIGN

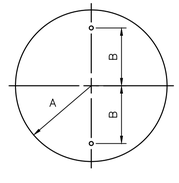

A	B	C
12"	8"	0.080"

24" SIGN PLATE HOLE DETAIL

Z0C44

APPROVED BY:	APPROVED BY:
DocuSigned by: Sukul Tanwar 9EF5B0C641F5478...	DocuSigned by: Carol Haddock A93C4100T2B3453...
CITY ENGINEER	DIRECTOR OF HOUSTON PUBLIC WORKS
EFF DATE: NOV–27–2023	DWG NO: 01582–01

HATCH
750 TOWN & COUNTRY BLVD
SUITE 650
HOUSTON, TX 77024
P: 832–930–7670
TX FIRM NUMBER: F–314

SURVEYED BY:
AMANI ENGINEERING, INC
FB NO. P–6357

STATE OF TEXAS — MARK G. SCALLY — 136279 — LICENSED PROFESSIONAL ENGINEER — 08/14/26

CITY OF HOUSTON
HOUSTON PUBLIC WORKS STANDARD

CONSTRUCTION SIGN BUILD HOUSTON FORWARD

WBS NUMBER	FOR CITY OF HOUSTON USE ONLY
R–000267–0173–4	HOUSTON PUBLIC WORKS ACCEPTED AND FILED 82825 CITY DRAWING NUMBER Approval Date 08/14/26 HOUSTON TX
DRAWING SCALE	
NOT TO SCALE	
CITY OF HOUSTON PM	
NUPUR KRISHNAN P.E. N.K.	
SHEET NO. 249 OF 274	

DocuSign Envelope ID: CB71C116-B716-4899-A5EE-0D2F2CC55AF6

GENERAL NOTES

1. THE CONTRACTOR SHALL PROVIDE AND INSTALL TRAFFIC CONTROL DEVICES IN CONFORMANCE WITH PART VI OF THE TEXAS MANUAL ON UNIFORM TRAFFIC CONTROL DEVICES (TMUTCD) LATEST EDITION WITIH REVISIONS DURING THE ENTIRE CONSTRUCTION PERIOD.
2. ALL SIGNS AND TRAFFIC CONTROL DEVICES SHALL CONFORM THE LATEST VERSION OF THE TMUTCD.
3. NO LANES SHALL BE CLOSED DURING THE HOURS OF 7:00 AM TO 9:00 AM AND 4:00 PM TO 6:00 PM MONDAY THRU FRIDAY WITHOUT APPROVAL OF THE CITY TRAFFIC ENGINEER.
4. NO WORK SHALL BE PERFORMED IN RESIDENTIAL AREAS FROM 7:00 PM TO 7:00 AM.
5. CONTRACTOR SHALL MAINTAIN APPROVED NUMBER OF THROUGH LANES OF TRAFFIC IN EACH DIRECTION DURING CONSTRUCTION WORKING HOURS. TRAFFIC CONTROL PLANS SHALL INCLUDE ONE–WAY AND/OR DETOUR PLANS. CONTRACTOR SHALL MAINTAIN ADA COMPLIANT PEDESTRIAN ACCESS TO BUS STOPS AND ADEQUATE BUS ACCESS TO ALL THE BUS STOPS.
6. CONTRACTOR SHALL MAINTAIN TRAFFIC LANES AND DETOURS ACCORDING TO TRAFFIC CONTROL PLANS DURING WORKING HOURS.
7. CONTRACTOR SHALL COVER OPEN PAVEMENT EXCAVATIONS FOR MINOR UTILITY WORK WITH ANCHORED STEEL PLATES DURING NON–WORKING HOURS, AND OPEN LANES FOR NORMAL TRAFFIC FLOW WHEN FEASIBLE.
8. IF THE CONTRACTOR CHOOSES TO USE A DIFFERENT METHOD OF "TRAFFIC CONTROL PLANS" DURING THE CONSTRUCTION THAN WHAT IS OUTLINED IN THE CONTRACT DRAWINGS, THE CONTRACTOR SHALL BE RESPONSIBLE TO PREPARE AND SUBMIT AN ALTERNATE SET OF TRAFFIC CONTROL PLANS TO THE CITY OF HOUSTON PROJECT MANAGER FOR APPROVAL TEN WORKING DAYS PRIOR TO IMPLEMENTATION. THESE PLANS SHALL BE DRAWN TO SCALE ON REPRODUCIBLE MYLARS AND SHALL BE SEALED BY A LICENSED ENGINEER IN THE STATE OF TEXAS. OFFICE OF CITY ENGINEER, MOBILITY PERMITS SECTION REPRESENTATIVE APPROVAL IS REQUIRED TO ACCEPT THE PROPOSED CHANGES.
9. CONTRACTOR SHALL SECURE LANE/SIDEWALK/BICYCLE FACILITY CLOSURE PERMITS FROM OFFICE OF CITY ENGINEER (MOBILITY PERMIT SECTION AT https://geohub.houstontx.gov) BEFORE IMPLEMENTING THE TRAFFIC CONTROL PLAN. THE APPLICATION MUST BE SUBMITTED AT LEAST TEN DAYS PRIOR TO THE IMPLEMENTATION OF THE TRAFFIC CONTROL PLAN AND/OR BEGINNING CONSTRUCTION WORK. THE CONTRACTOR SHALL PROVIDE TRAFFIC CONTROL PLANS, CONSTRUCTION SEQUENCING, AND CONSTRUCTION SCHEDULE WITH THE APPLICATION.
10. CONTRACTOR SHALL HAVE APPROVED TRAFFIC CONTROL PLAN AND PERMIT AT THE JOB SITE FOR INSPECTION AT ALL TIMES.
11. DURING PAVEMENT SURFACE RESTORATION PROJECTS; THE CONTRACTOR SHALL NOT OPEN CLOSED LANES UNTIL THE PAVEMENT SURFACE HAS CURED ENOUGH TO ALLOW VEHICULAR TRAFFIC ACCORDING TO CITY OF HOUSTON STANDARD SPECIFICATIONS.
12. THE CONTRACTOR IS RESPONSIBLE FOR SCHEDULING AND COORDINATING ALL CONSTRUCTION ACTIVITIES WITH STAKE HOLDERS IN THE VICINITY INCLUDING EMERGENCY RESPONSE AGENCIES SUCH AS HOUSTON POLICE DEPARTMENT, HOUSTON FIRE DEPARTMENT, AND METROPOLITAN TRANSIT AUTHORITY.
13. CONTRACTOR SHALL BE RESPONSIBLE FOR ISSUING ALL WORK DIRECTIVES TO ALL SUB–CONTRACTORS, UTILITY COMPANIES, AND ALL OTHER ENTITIES PERFORMING CONSTRUCTION WORK ASSOCIATED WITH THE PROJECT.
14. NOTHING IN THESE NOTES OR PLANS SHALL RELIEVE THE CONTRACTOR OF THE RESPONSIBILITY FOR JOB SITE CONDITIONS DURING THE COURSE OF CONSTRUCTION OF THE PROJECT; INCLUDING SAFETY OF ALL MODES OF TRANSPORTATION, PERSONS, AND PROPERTY, AND THAT THIS REQUIREMENT SHALL APPLY CONTINUOUSLY AND NOT BE LIMITED TO WORKING HOURS.
15. THE OFFICE OF CITY ENGINEER (MOBILITY PERMITS GROUP) PER THE DIRECTION OF THE CITY TRAFFIC ENGINEER HAVE THE RIGHT TO DEMAND THE INSTALLATION OF ADDITIONAL TRAFFIC CONTROL DEVICES OR MODIFICATIONS OF THESE PLANS AND NOTES, AS DEEMED NECESSARY TO PROMOTE THE SAFE AND ORDERLY FLOW OF TRAFFIC, INCLUDING PEDESTRIANS AND BICYCLES, THROUGH THE CONSTRUCTION WORK ZONE. THE CONTRACTOR SHALL COMPLY WITH THESE ADDITIONAL REQUESTS OR MODIFICATIONS WITH DUE DILIGENCE.
16. ALL EXISTING TRAFFIC CONTROL SIGNS AND PAVEMENT MARKINGS SHALL BE MAINTAINED IN VISIBLE LOCATIONS DURING CONSTRUCTION UNLESS PRIOR WRITTEN APPROVAL IS OBTAINED FROM CITY OF HOUSTON PROJECT MANAGER. THE CONTRACTOR SHALL RESTORE OR REPLACE (AT THE DISCRETION OF THE CITY TRAFFIC ENGINEER) ANY PAVEMENT MARKING OR SIGNING DAMAGE DURING CONSTRUCTION OPERATIONS, INCLUDING RAISED PAVEMENT MARKERS (RPMS).
17. WHEN ENTERING OR LEAVING ROADWAYS CARRYING PUBLIC TRAFFIC, THE CONTRACTOR'S EQUIPMENT, WHETHER EMPTY OR LOADED SHALL IN ALL CASES YIELD TO PUBLIC TRAFFIC WITH THE ASSISTANCE OF CONTRACTOR PROVIDED CERTIFIED FLAGGER/PEACE OFFICER.
18. ACCESS TO DRIVEWAYS ADJACENT TO THE CONSTRUCTION WORK ZONE SHALL BE MAINTAINED AT ALL TIMES AS MUCH AS POSSIBLE. ADDITIONAL CONES AND/OR DELINEATORS MAY BE REQUIRED TO DELINEATE THE DRIVEWAY ACCESS ROUTE THROUGH THE CONSTRUCTION WORK ZONE. A MINIMUM OF ONE TRAVEL LANE SHALL BE MAINTAINED ACROSS THE DRIVEWAYS, UNLESS PRIOR WRITTEN APPROVAL IS OBTAINED FROM CITY OF HOUSTON PROJECT MANAGER.
19. SPILLAGE RESULTING FROM HAULING OPERATIONS ALONG OR ACROSS ANY PUBLIC TRAVELED WAY SHALL BE REMOVED IMMEDIATELY BY THE CONTRACTOR.
20. THE CONTRACTOR SHALL SUBMIT AN APPLICATION FOR TEMPORARY PARKING RESTRICTIONS IF THERE ARE PARKING METERS LOCATED AT THE PROPOSED LANE CLOSURES FROM PARKING MANAGEMENT DIVISION (832–393–8690) AT LEAST TEN BUSINESS DAYS BEFORE IMPLEMENTATION OF LANE CLOSURES. IN ADDITION, TEMPORARY NO PARKING SIGNS SHALL BE POSTED 24 HOURS PRIOR TO COMMENCEMENT OF WORK.
21. ADDITIONAL OFF DUTY OFFICERS/FLAGGERS MAY BE REQUESTED TO DIRECT TRAFFIC WHEN LANES ARE BLOCKED AT THE DISCRETION OF THE CITY PROJECT MANAGER EVEN IF THEY ARE NOT SPECIFICALLY IDENTIFIED ON THE PROJECT PLANS.
22. THE CONTRACTOR SHALL REPLACE WITHIN 72 HOURS, ALL TRAFFIC SIGNAL LOOP DETECTORS DAMAGED DURING CONSTRUCTION.
23. IN GENERAL, A SOLAR POWERED FLASHING ARROW BOARD SHALL BE REQUIRED ON ALL MAJOR THOROUGHFARE LANES CLOSURES. EXCEPTIONS TO FLASHING ARROW BOARDS AND/OR IMPLEMENTATION ON RESIDENTIAL LANE CLOSURES SHALL BE APPROVED BY CITY TRAFFIC ENGINEER.
24. APPROVED TRAFFIC CONTROL PLAN SHALL BE IN PLACE BEFORE STARTING ANY EXCAVATION.
25. WATER FILLED BARRIERS CAN BE USED AS INSTRUCTED BY THE ENGINEER AND APPROVED BY THE CITY FOR PROJECTS WHERE SPACE IS LIMITED AND HEAVY EQUIPMENT TO PLACE CONCRETE BARRIERS IS NOT FEASIBLE. WATER FILLED BARRIERS SHALL NOT BE USED ON ROADWAYS WITH A POSTED SPEED LIMIT MORE THAN 45 MPH.
26. WATER FILLED BARRIERS MUST BE INSTALLED AND MAINTAINED PER THE MANUFACTURER'S REQUIREMENTS AND ROUTINELY INSPECTED FOR DEFECTS.
27. IF WATER FILLED BARRIER IS PROVIDED, USE ENVIRONMENTALLY SAFE ANTI–FREEZING AGENT IN THE WATER WHEN IT IS APPLICABLE PER MANUFACTURER SPECIFICATIONS AND RECOVER AGENT WHEN THE BARRIER IS DRAINED.
28. DISPOSE OF WATER AND AGENT PROPERLY. DO NOT DRAIN WATER FILLED BARRIER INTO OR ACROSS AN EXISTING TRAVEL LANE.
29. PROVIDE BARRIER UNITS THAT ARE CAPABLE OF BEING LIFTED AND MOVED WHEN FILLED IF DRAINING IS NOT POSSIBLE.
30. PROVIDE WATER FILLED BARRIER THAT ACTS AS ITS OWN FREE STANDING, NON–REDIRECTIVE END TREATMENT.
31. WHEN WATER FILLED BARRIERS ARE USED TO CHANNELIZE PEDESTRIANS, THEY MUST HAVE A CONTINUOUS DETECTABLE BOTTOM FOR USERS OF LONG CANES AND THE TOP OF THE UNIT SHALL NOT BE LESS THAN 32 INCHES IN HEIGHT.
32. ANY CLOSURE OF A PEDESTRIAN OR BICYCLE FACILITY SHALL REQUIRE THE SHORTEST DETOUR THAT MAINTAINS THE SAFETY OF PEDESTRIAN AND/OR BICYCLISTS.

SPACING FOR CHANNELIZING DEVICES

A. PLASTIC DRUMS ON MERGING TAPER @ 30' C – C WITH CHEVRON SIGN @ 60' C – C AND WARNING LIGHTS FOR OVERNIGHT CLOSURE.

B. PLASTIC DRUMS ON DOWNSTREAM TAPER @ 30' C – C (RETURN TAPER AND BARRICADE ARE OPTIONAL AND DIVIDED ROADWAY SECTION)

C. PLASTIC DRUMS ON RADII @ 35' C –C.

D. PLASTIC DRUMS ON TANGENT @ 35' C – C WITH VERTICAL PANEL AT 70' C – C AND APPROVED WARNING LIGHT @ 70' C – C (FOR OVERNIGHT CLOSURE).

E. PLASTIC DRUMS IN FRONT OF CONSTRUCTION ZONE @ 20' C – C WITH VERTICAL PANEL AT 40' C – C AND APPROVED WARNING LIGHT @ 40' C – C (FOR OVERNIGHT CLOSURE).

F. CONCRETE TRAFFIC BARRIER (CTB) OR LOW PROFILE CONCRETE TRAFFIC BARRIER (LPCTB) WITH APPROVED REFLECTORS @ 10' C – C IF PAVEMENT DROP IS GREATER THAN 1 FOOT.

G. PLASTIC DRUMS W/GUARD RAIL MOUNTED.

H. SELF– RIGHTING VERTICAL PANEL SPACING.
– 4 LANES TO 2 LANES UNDIVIDED ROADWAY SECTION @ 20' C – C.
– 4 LANES DIVIDED ROADWAY TO ONE SIDE TWO WAY ROADWAY @ 20' C – C.
– LEFT LANE AND RIGHT LANE STORAGE BAYS @ 15' C – C.

I. SPACING SHOWN ON TRAFFIC CONTROL SHALL SUPERSEDE THE ABOVE SPACING.

J. SPACING MAY BE ADJUSTED TO PROVIDE DRIVEWAYS, INTERSECTIONS AND /OR MEDIAN OPENINGS.

TABLE C3 – TYPICAL SIGN SPACING, TAPER LENGTHS, AND SUGGESTED SPACING OF CHANNELIZATION DEVICES

POSTED SPEED (MPH)	SIGN SPACING "X" (FEET)	MIN. DESIRABLE TAPER LENGTH "L"			SUGGESTED MAXIMUM SPACING OF DEVICE	
		10' OFFSET	11' OFFSET	12' OFFSET	ON A TAPER	ON A TANGENT
30	120'	150'	165'	180'	30'	60'–75'
35	160'	205'	225'	245'	35'	70'–90'
40	240'	265'	295'	320'	40'	80'–100'
45	320'	450'	495'	540'	45'	90'–110'
50	400'	500'	550'	600'	50'	100'–125'
55	500'	550'	605'	660'	55'	110'–140'

TABLE C4 – STOPPING SIGHT DISTANCE AS A FUNCTION OF SPEED

POSTED SPEED (MPH)	DISTANCE "D" (FEET)
30	200
35	250
40	305
45	360
50	425
55	495

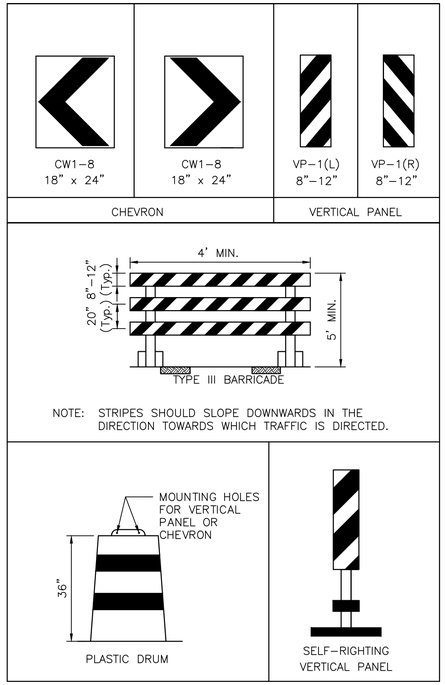

CHANNELIZATION AND BARRICADES

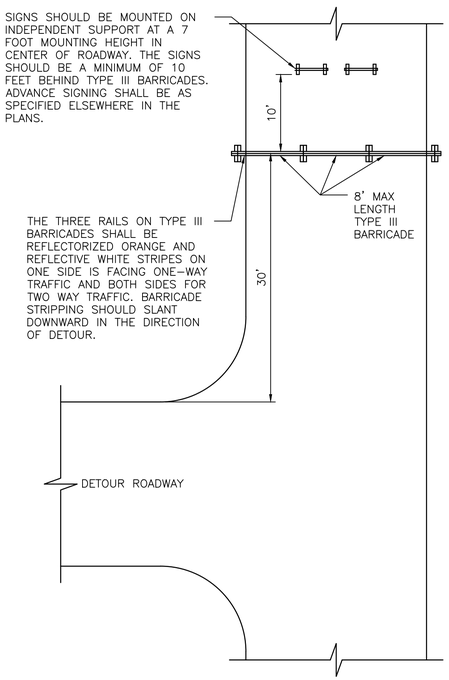

PLAN VIEW
TYPE III BARRICADE (POST AND SKID)
TYPICAL APPLICATION

LEGEND:

- SIGN
- FLAGGER
- APPROVED CHANNELIZATION DEVICE
- BARRICADE
- FLASHING ARROW PANEL
- AREA UNDER CONSTRUCTION
- EXISTING TRAVEL WAY
- TRAFFIC CONTROL PLAN DETOUR TRAVEL WAY

APPROVED BY: DocuSigned by: Suhail Kanwar 9EF880C641F5478... — CITY ENGINEER

APPROVED BY: DocuSigned by: KHANG NGUYEN 95A29EFDA7584CD... — CITY TRAFFIC ENGINEER

APPROVED BY: DocuSigned by: Carol Haddock A93C410B72B3453... — DIRECTOR OF HOUSTON PUBLIC WORKS

EFF DATE: NOV–27–2023

DWG NO: 01555–01

HATCH
750 TOWN & COUNTRY BLVD
SUITE 650
HOUSTON, TX 77024
P: 832–930–7670
TX FIRM NUMBER: F–314

STATE OF TEXAS — MARK G. SCALLY — 136279 — LICENSED PROFESSIONAL ENGINEER — 9/19/26

CITY OF HOUSTON
HOUSTON PUBLIC WORKS STANDARD

TCP NOTES CHANNELIZING DEVICES AND BARRICADES

WBS NUMBER	FOR CITY OF HOUSTON USE ONLY
R–000267–0173–4	HOUSTON PUBLIC WORKS ACCEPTED AND FILED 82825 CITY DRAWING NUMBER Approval Date 08/14/26 HOUSTON TX
DRAWING SCALE	
AS NOTED	
CITY OF HOUSTON PM	
NUPUR KRISHNAN, P.E. N.K.	
Z0C45	SHEET NO. 250 OF 274

DISCLAIMER:
THE USE OF THIS STANDARD IS GOVERNED BY THE TEXAS ENGINEERING PRACTICE ACT. THE DESIGN REQUIREMENTS ON THIS STANDARD DO NOT PURPORT TO ADDRESS ALL OF THE SAFETY CONCERNS ASSOCIATED WITH THEIR USE. THE ENGINEER OF RECORD (EOR) IS TO REVIEW THESE DESIGN REQUIREMENTS AND BY AUTHORIZING THEIR USE, ACCEPTS RESPONSIBILITY FOR THEIR APPLICABILITY, ADEQUACY AND SAFETY. NO WARRANTY OF ANY KIND IS MADE BY THE CITY OF HOUSTON FOR ANY PURPOSES WHATSOEVER. THE CITY OF HOUSTON ASSUMES NO RESPONSIBILITY FOR INCORRECT RESULTS OR DAMAGES RESULTING FROM ITS USE.

DocuSign Envelope ID: CB71C116-B716-4899-A5EE-0D2F2CC55AF6

A	D	I	J
		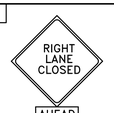	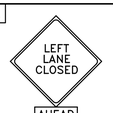
CW20-1	G20-2	AHEAD CW20-5(2) CW16-3	AHEAD CW20-5(1) CW16-3

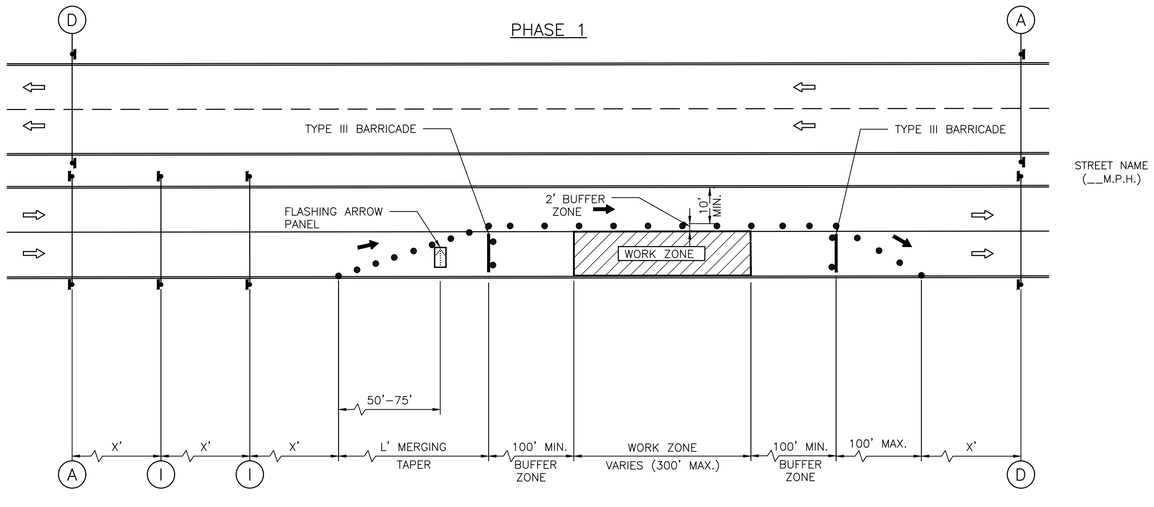

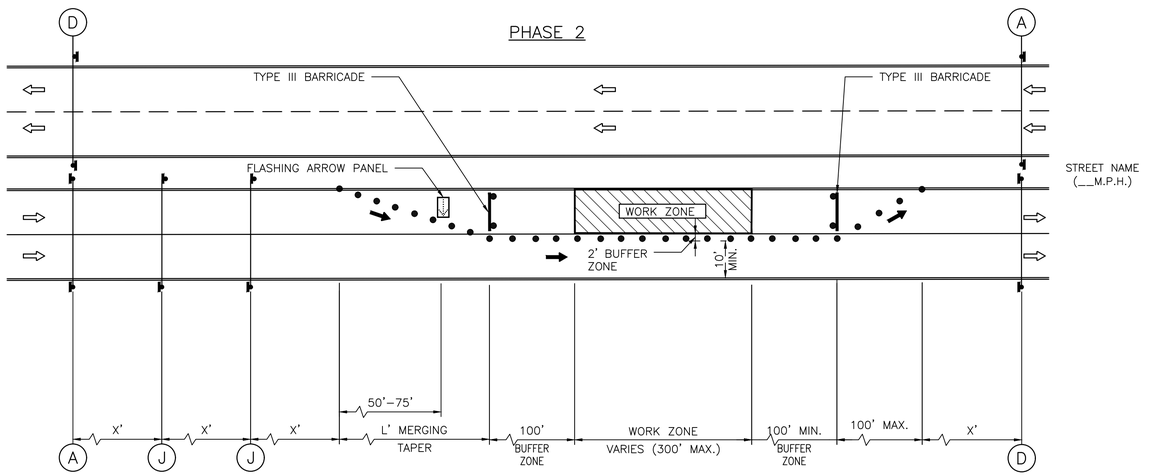

LEGEND:

- SIGN
- FLAGGER
- APPROVED CHANNELIZATION DEVICE
- BARRICADE
- FLASHING ARROW PANEL
- AREA UNDER CONSTRUCTION
- EXISTING TRAVEL WAY
- TRAFFIC CONTROL PLAN DETOUR TRAVEL WAY

NOTES:

1. RETURN TAPERS AND DOWNSTREAM BARRICADES ARE OPTIONAL ON A DIVIDED ROADWAY SECTION.
2. DOUBLE SIGNS SHALL BE USED ONLY ON ROADWAYS WITH MEDIANS.
3. FOR DIMENSIONS REFER TO SHEET 01555–01.
4. INSTALL FLASHERS ON DRUMS WHERE REQUIRED AND APPROVED BY CITY TRAFFIC ENGINEER.

APPROVED BY:	APPROVED BY:
DocuSigned by: Sukat kanwar 9EF88DC641F5478...	DocuSigned by: KHANG NGUYEN 95A29EFDA75B4CD...
CITY ENGINEER	CITY TRAFFIC ENGINEER
APPROVED BY: DocuSigned by: Carol Haddock A93C410B72B3453...	
DIRECTOR OF HOUSTON PUBLIC WORKS	
EFF DATE: NOV–27–2023	DWG NO: 01555–04

HATCH
750 TOWN & COUNTRY BLVD
SUITE 650
HOUSTON, TX 77024
P: 832–930–7670
TX FIRM NUMBER: F–314

STATE OF TEXAS · MARK G. SCALLY · 136279 · LICENSED PROFESSIONAL ENGINEER · 9/11/26

CITY OF HOUSTON
HOUSTON PUBLIC WORKS STANDARD

TCP ONE LANE CLOSURE PHASE 1 & 2

WBS NUMBER	FOR CITY OF HOUSTON USE ONLY
R–000267–0173–4	HOUSTON PUBLIC WORKS ACCEPTED AND FILED 82825 CITY DRAWING NUMBER Approval Date 08/14/26 HOUSTON TX
DRAWING SCALE	
AS NOTED	
CITY OF HOUSTON PM	
NUPUR KRISHNAN, P.E. N.K.	
Z0C45A	SHEET NO. **250A OF 274**

DISCLAIMER:
THE USE OF THIS STANDARD IS GOVERNED BY THE TEXAS ENGINEERING PRACTICE ACT. THE DESIGN REQUIREMENTS ON THIS STANDARD DO NOT PURPORT TO ADDRESS ALL OF THE SAFETY CONCERNS ASSOCIATED WITH THEIR USE. THE ENGINEER OF RECORD (EOR) IS TO REVIEW THESE DESIGN REQUIREMENTS AND BY AUTHORIZING THEIR USE, ACCEPTS RESPONSIBILITY FOR THEIR APPLICABILITY, ADEQUACY AND SAFETY. NO WARRANTY OF ANY KIND IS MADE BY THE CITY OF HOUSTON FOR ANY PURPOSES WHATSOEVER. THE CITY OF HOUSTON ASSUMES NO RESPONSIBILITY FOR INCORRECT RESULTS OR DAMAGES RESULTING FROM ITS USE.

DocuSign Envelope ID: CB71C116-B716-4899-A5EE-0D2F2CC55AF6

A	B	C	D	E	F	G	H	I	J
ROAD WORK AHEAD	ROAD CLOSED AHEAD	DETOUR AHEAD	END ROAD WORK	STREET NAME DETOUR →	STREET NAME DETOUR ←	END DETOUR	STREET NAME DETOUR ↑	RIGHT LANE CLOSED AHEAD	LEFT LANE CLOSED AHEAD
CW20-1	CW20-3	CW20-2	G20-2	M4-9R	M4-9L	M4-8a	M4-9T	CW20-5(2) CW16-3	CW20-5(1) CW16-3

K	L	M	N	O	P	Q	R	
ONE WAY ←	ONE WAY →	DO NOT ENTER	ROAD CLOSED	DETOUR			BEGIN ONE WAY	
R6-2(L)	R6-2(R)	R5-1	R11-2	M4-10(L)	R3-1	R3-2	R6-6	

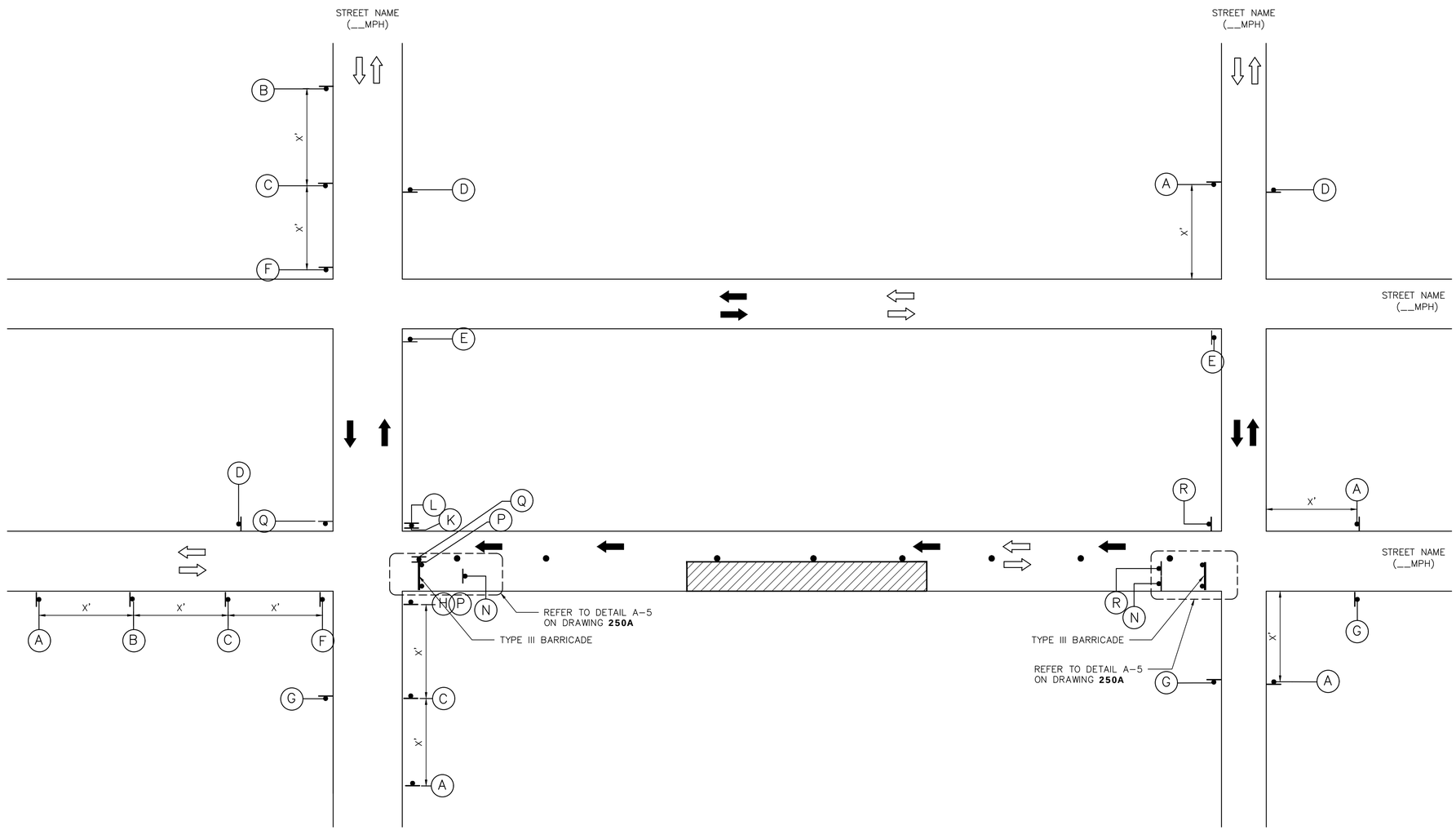

LEGEND:

- SIGN
- FLAGGER
- APPROVED CHANNELIZATION DEVICE
- BARRICADE
- FLASHING ARROW PANEL
- AREA UNDER CONSTRUCTION
- EXISTING TRAVEL WAY
- TRAFFIC CONTROL PLAN DETOUR TRAVEL WAY

NOTES:

1. A 10' MINIMUM LANE WIDTH FOR EMERGENCY SHALL BE MADE AVAILABLE AND MAINTAINED BY THE CONTRACTOR AT ALL TIMES.
2. FOR DIMENSIONS REFER TO SHEET **250A**
3. INSTALL FLASHERS ON DRUMS WHERE REQUIRED AND APPROVED BY CITY TRAFFIC ENGINEER.

APPROVED BY:	APPROVED BY:
DocuSigned by: Sukul Tanwar 9EF8B0C641F5478...	DocuSigned by: KHANG NGUYEN 95A29EFDA75B4CD...
CITY ENGINEER	CITY TRAFFIC ENGINEER

APPROVED BY:
DocuSigned by: Carol Haddock A93C410B72B0453...
DIRECTOR OF HOUSTON PUBLIC WORKS

EFF DATE: NOV-27-2023 | DWG NO: 01555-05

HATCH
750 TOWN & COUNTRY BLVD
SUITE 650
HOUSTON, TX 77024
P: 832-930-7670
TX FIRM NUMBER: F-314

STATE OF TEXAS — MARK G. SCALLY — 136279 — LICENSED PROFESSIONAL ENGINEER — 5/1/26

CITY OF HOUSTON
HOUSTON PUBLIC WORKS STANDARD

TCP TYPICAL DETOUR ROUTING WITH ONE LANE CLOSURE (ONE BLOCK)

WBS NUMBER	FOR CITY OF HOUSTON USE ONLY
R-000267-0173-4	HOUSTON PUBLIC WORKS ACCEPTED AND FILED 82825 CITY DRAWING NUMBER Approval Date 08/14/26 HOUSTON TX
DRAWING SCALE	
AS NOTED	
CITY OF HOUSTON PM	
NUPUR KRISHNAN, P.E. N.K.	
SHEET NO. **250B OF 274**	

Z0C45B

DISCLAIMER:
THE USE OF THIS STANDARD IS GOVERNED BY THE TEXAS ENGINEERING PRACTICE ACT. THE DESIGN REQUIREMENTS ON THIS STANDARD DO NOT PURPORT TO ADDRESS ALL OF THE SAFETY CONCERNS ASSOCIATED WITH THEIR USE. THE ENGINEER OF RECORD (EOR) IS TO REVIEW THESE DESIGN REQUIREMENTS AND BY AUTHORIZING THEIR USE, ACCEPTS RESPONSIBILITY FOR THEIR APPLICABILITY, ADEQUACY AND SAFETY. NO WARRANTY OF ANY KIND IS MADE BY THE CITY OF HOUSTON FOR ANY PURPOSES WHATSOEVER. THE CITY OF HOUSTON ASSUMES NO RESPONSIBILITY FOR INCORRECT RESULTS OR DAMAGES RESULTING FROM ITS USE.

TRAFFIC CONTROL PLAN
LANE CLOSURES ON MULTILANE ROADS
TCP (2-4a)

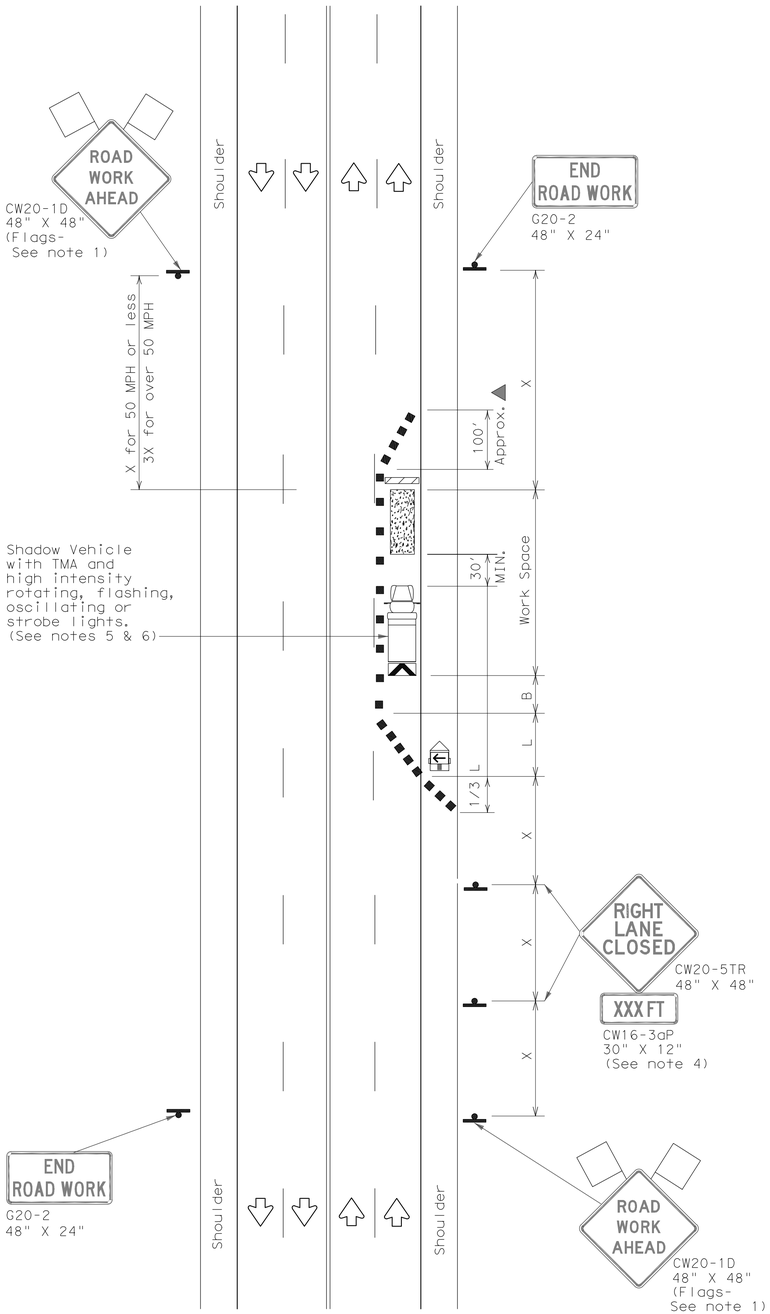

TCP (2-4a)

ONE LANE CLOSED

LEGEND			
	Type 3 Barricade		Channelizing Devices
	Heavy Work Vehicle		Truck Mounted Attenuator (TMA)
	Trailer Mounted Flashing Arrow Board	M	Portable Changeable Message Sign (PCMS)
	Sign		Traffic Flow
	Flag		Flagger

Posted Speed ✳	Formula	Minimum Desirable Taper Lengths ✳✳ 10′ Offset	11′ Offset	12′ Offset	Suggested Maximum Spacing of Channelizing Devices On a Taper	On a Tangent	Minimum Sign Spacing "X" Distance	Suggested Longitudinal Buffer Space "B"
30	$L=\frac{WS^2}{60}$	150′	165′	180′	30′	60′	120′	90′
35		205′	225′	245′	35′	70′	160′	120′
40		265′	295′	320′	40′	80′	240′	155′
45	L=WS	450′	495′	540′	45′	90′	320′	195′
50		500′	550′	600′	50′	100′	400′	240′
55		550′	605′	660′	55′	110′	500′	295′
60		600′	660′	720′	60′	120′	600′	350′
65		650′	715′	780′	65′	130′	700′	410′
70		700′	770′	840′	70′	140′	800′	475′
75		750′	825′	900′	75′	150′	900′	540′

✳ Conventional Roads Only

✳✳ Taper lengths have been rounded off.
L=Length of Taper(FT) W=Width of Offset(FT) S=Posted Speed(MPH)

TYPICAL USAGE				
MOBILE	SHORT DURATION	SHORT TERM STATIONARY	INTERMEDIATE TERM STATIONARY	LONG TERM STATIONARY
		✓	✓	

GENERAL NOTES

1. Flags attached to signs where shown, are REQUIRED.
2. All traffic control devices illustrated are REQUIRED, except those denoted with the triangle symbol may be omitted when stated elsewhere in the plans, or for routine maintenance work, when approved by the Engineer.
3. The downstream taper is optional. When used, it should be 100 feet minimum length per lane.
4. For short term applications, when post mounted signs are not used, the distance legend may be shown on the sign face rather than on a CW16-3aP supplemental plaque.
5. A Shadow Vehicle with a TMA should be used anytime it can be positioned 30 to 100 feet in advance of the area of crew exposure without adversely affecting the performance or quality of the work. If workers are no longer present but road or work conditions require the traffic control to remain in place, Type 3 Barricades or other channelizing devices may be substituted for the Shadow Vehicle and TMA.
6. Additional Shadow Vehicles with TMAs may be positioned in each closed lane, on the shoulder or off the paved surface, next to those shown in order to protect a wider work space.

TCP (2-4a)

7. If this TCP is used for a left lane closure, CW20-5TL "LEFT LANE CLOSED"signs shall be used and channelizing devices shall be placed on the centerline to protect the work space from opposing traffic with the arrow board placed in the closed lane near the end of the merging taper.

NO.	DATE	REVISION	APP.

HATCH
750 TOWN & COUNTRY BLVD
SUITE 650
HOUSTON, TX 77024
P: 832-930-7670
TX FIRM NUMBER: F-314

STATE OF TEXAS
MARK G. SCALLY
136279
LICENSED
PROFESSIONAL ENGINEER
5/7/26

CITY OF HOUSTON
HOUSTON PUBLIC WORKS

LIFT STATION RENEWAL & REPLACEMENT PROJECT
TXDOT TRAFFIC CONTROL DETAIL

WBS NUMBER	FOR CITY OF HOUSTON USE ONLY
R-00267-0173-4	HOUSTON PUBLIC WORKS ACCEPTED AND FILED 82825 CITY DRAWING NUMBER Approval Date 08/14/26 HOUSTON TX
DRAWING SCALE	
NOT TO SCALE	
CITY OF HOUSTON PM	
NUPUR KRISHNAN N.K.	
SHEET NO. 250C OF 274	

Z0C45C

PLOTTED: 2/2/2026 9:43 AM
PLOT STYLE: Grayscale.ctb
FILE PATH: C:\pwworking\hatch-dpd-south_central_us\dms51143\H374729-0000-220-260-0002.dwg

NO.	DATE	REVISION	APP.

SHEET NOT USED

HATCH

750 TOWN & COUNTRY BLVD
SUITE 650
HOUSTON, TX 77024
P: 832-930-7670
TX FIRM NUMBER: F- 314

SURVEYED BY:
AMANI ENGINEERING, INC.
FB NO. P-6357

STATE OF TEXAS
MARK G. SCALLY
136279
LICENSED PROFESSIONAL ENGINEER
9/1/26

CITY OF HOUSTON
HOUSTON PUBLIC WORKS

LIFT STATION RENEWAL & REPLACEMENT PROJECT

WBS NUMBER
R-000267-0173-4
DRAWING SCALE
AS NOTED
CITY OF HOUSTON PM
NUPUR KRISHNAN P.E. N.K.
SHEET NO. 251 OF 274

FOR CITY OF HOUSTON USE ONLY

HOUSTON PUBLIC WORKS
ACCEPTED AND FILED
82825
CITY DRAWING NUMBER
Approval Date 08/14/26
HOUSTON TX

Z0C46

PLOTTED: 6/5/2026 9:26 AM
PLOT STYLE: Coh_ctb_230809.ctb
FILE PATH: Y:\2022071 LIFT STATIONS RENEWAL AND REPLACEMENT (HATCH) WBS NO. R-000267-0173-3\Auto CAD\Details\TYPICAL SITE DETAILS.dwg

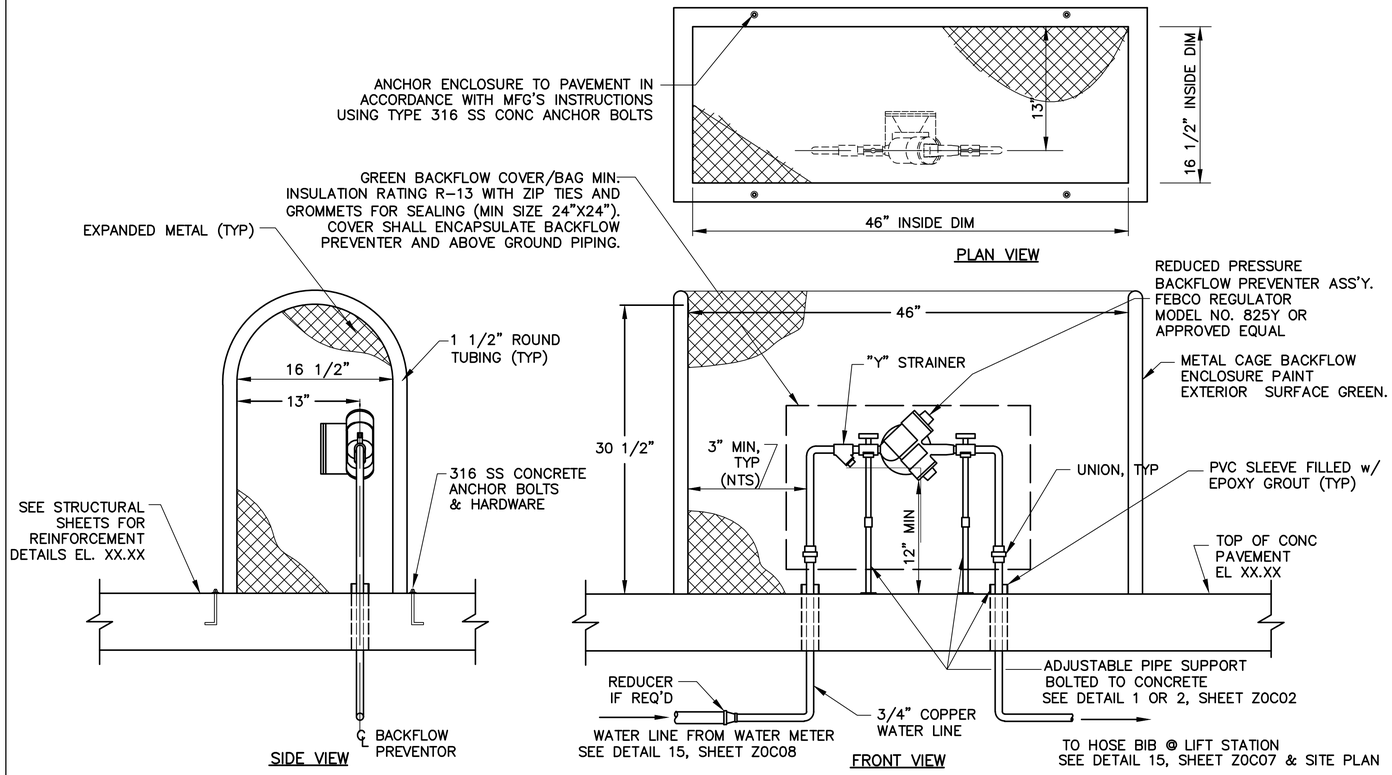

OPEN CAGE REDUCED PRESSURE BACKFLOW PREVENTOR INSTALLATION (*NOTE G*)

DETAIL 2

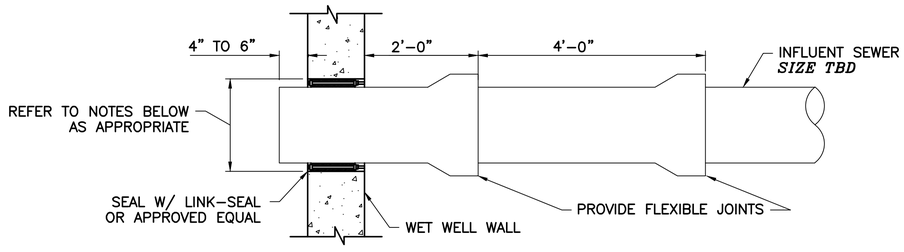

FOR OPENINGS TO BE CORED (CAISSON CONSTRUCTION):

1. IDENTIFY PIPE PENETRATION LOCATION WITH 1" DIA PLASTIC PIPE SLEEVE.
2. DIAMETER OF PENETRATION OEPNING SHALL BE EQUAL TO PIPE OUTER DIAMETER PLUS 2 TIME LINK-SEAL THICKNESS.
3. PROVIDE ADDITIONAL REINFORCEMENT AROUND PENETRATION OPENING AS PER DRAWINGS Z0S23 BEFORE CASTING WALL.

FOR OPENINGS TO BE SLEEVED OR FORMED (CAISSON CONSTRUCTION):

1. IDENTIFY PIPE PENETRATION LOCATION.
2. DIAMETER OF PENETRATION OPENING SHALL BE EQUAL TO PIPE OUTER DIAMETER PLUS 2 TIMES LINK-SEAL THICKNESS. SEE "TYPICAL PIPE BLOCK-OUT DETAIL FOR CAISSON CONSTRUCTION," THIS SHEET.
3. PROVIDE ADDITIONAL REINFORCEMENT AROUND PENETRATION OPENING AS PER DRAWING Z0S23 BEFORE CASTING WALL.

FOR OPENINGS TO BE FORMED OR SLEEVED (OPEN CUT CONSTRUCTION):

1. IDENTIFY PIPE PENETRATION LOCATION.
2. DIAMETER OF PENETRATION OPENING SHALL BE EQUAL TO PIPE OUTER DIAMETER PLUS 2 TIMES LINK-SEAL THICKNESS.
3. PROVIDE ADDITIONAL REINFORCEMENT AROUND PENETRATION OPENING AS PER DRAWING Z0S23 BEFORE CASTING WALL.

TYP INFLUENT SEWER ENTRY DETAIL

DETAIL 3 Z0C49

NO.	DATE	REVISION	APP.

FCM Engineers, PC
3300 S. Gessner Rd. Suite 249
T- 713-706-4412
F- 713-706-4410
Tx Firm No. 13481

HATCH
750 TOWN & COUNTRY BLVD
SUITE 650
HOUSTON, TX 77024
P: 832-930-7670
TX FIRM NUMBER: F-314

SURVEYED BY:
AMANI ENGINEERING, INC
FB NO. P-6357

STATE OF TEXAS
FRANK C. MBACHU
108363
LICENSED PROFESSIONAL ENGINEER
3/23/2026

CITY OF HOUSTON
HOUSTON PUBLIC WORKS

LIFT STATION RENEWAL & REPLACEMENT PROJECT
TYPICAL SITE DETAILS II

WBS NUMBER
R-000267-0173-4
DRAWING SCALE
N.T.S
CITY OF HOUSTON PM
NUPUR KRISHNAN P.E. N.K.

FOR CITY OF HOUSTON USE ONLY

HOUSTON PUBLIC WORKS
ACCEPTED AND FILED
82825
CITY DRAWING NUMBER
Approval Date 08/14/26
HOUSTON TX

Z0C47 SHEET NO. 252 OF 274

FILE PATH: Y:\2022071 LIFT STATIONS RENEWAL AND REPLACEMENT (HATCH) WBS NO. R-000267-0173-3\Auto CAD\Details\TYPICAL SITE DETAILS - Z0C48.dwg
PLOT STYLE: Con_ctb_230809.ctb PLOTTED: 6/5/2026 9:14 AM

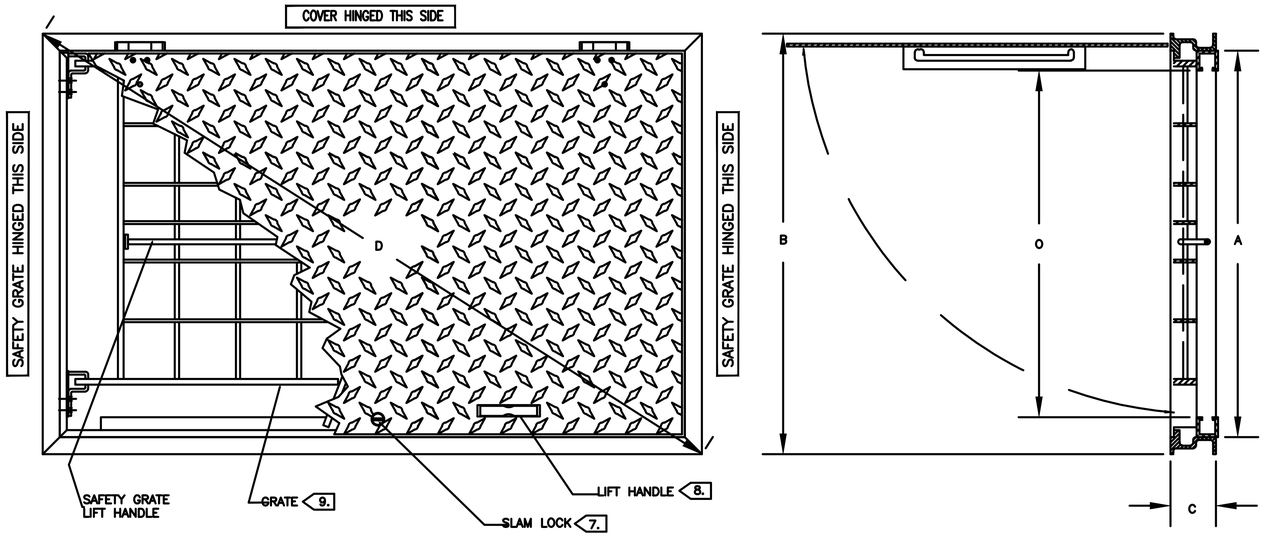

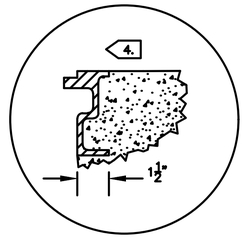

DETAIL B

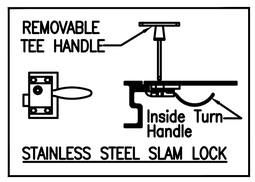

DETAIL A

PATTERN NO	DIMENSIONS IN INCHES		UNOBSTRUCTED CLEAR OPENING	HEIGHT	DIAGONAL
ALUMINUM	A x A1	B x B1	O x O1	C	D
FLED-AOSH	PER MANUFACTURER	PER MANUFACTURER	MATCH EXISTING	PER MANUFACTURER	PER MANUFACTURER

1.) MATERIAL SHALL BE 6061-T6 ALUMINUM FOR BARS, ANGLES, AND EXTRUSIONS. 1/4" DIAMOND PLATE SHALL BE 5086 ALUMINUM. EXTERIOR OF FRAME WHICH COMES IN CONTACT WITH CONCRETE SHALL HAVE ONE COAT FOREST GREEN PAINT.

2.) UNIT DESIGNED PEDESTRIAN RATED FOR A MINIMUM LIVE LOAD OF 300 LBS./SQ.FT.

3.) DOOR SHALL BE EQUIPPED WITH A HOLD OPEN ARM. DOOR SHALL LOCK OPEN IN THE 90 DEGREE POSITION. HOLD OPEN ARM SHALL BE FASTENED TO THE FRAME WITH A 1/2" GRADE 316 STAINLESS STEEL BOLT.

4. ANGLE FRAME SHALL BE OF EXTRUDED ALUMINUM, WITH A CONTINUOUS 1-1/2" ANCHOR FLANGE.

5.) COVER HINGES SHALL BE OF HEAVY DUTY DESIGN. MATERIAL SHALL BE GRADE 316 STAINLESS STEEL. EACH HINGE SHALL HAVE A GRADE 316 STAINLESS STEEL, 3/8" DIAMETER HINGE PIN. HINGE SHALL BE FASTENED TO ANGLE AND DIAMOND PLATE WITH GRADE 316 STAINLESS STEEL BOLTS AND NY-LOCK NUTS.

6.) ALL HARDWARE SHALL BE STAINLESS STEEL.

7. EACH HATCH SHALL BE SUPPLIED WITH A GRADE 316 STAINLESS STEEL SLAM LOCK, WITH KEY WAY PROTECTED BY A THREADED PLUG. PLUG SHALL BE FLUSH WITH THE TOP OF THE 1/4" DIAMOND PLATE. SLAM LOCK SHALL BE FASTENED WITH FOUR GRADE 316 STAINLESS STEEL BOLTS AND WASHERS.

8. EACH HATCH SHALL BE EQUIPPED WITH AN ALUMINUM LIFT HANDLE. THE LIFT HANDLE SHALL BE FLUSH WITH THE TOP OF THE 1/4" DIAMOND PLATE.

9. UNITS SHALL BE SUPPLIED WITH A HINGED SAFETY GRATES (SAFETY YELLOW) TO PROVIDE PROTECTION AGAINST FALL THROUGH AND TO CONTROL ACCESS TO THE CONFINED SPACE.

10.) HATCH COVERS SHALL BE PAINTED FOREST GREEN TO DEMARCATE AND PREVENT VANDALISM.

11.) FOR PUMP ACCESS HATCH PROVIDE AN ALUMINUM SAFETY GRATING SYSTEM, 3" MAXIMUM CLEARANCE WITH OPENING EDGE.

12.) HATCH SHALL BE CONSTRUCTED THAT IS WATER-TIGHT

13.) PROTECTIVE COATING SHALL BE APPLIED TO THE ACCESS HATCH INTERIOR AND EXTERIOR SURFACES IN ITS ENTIRETY. REFER TO SPECIFICATION 09901.

LIFT STATION WET WELL AND SPLITTER BOX HATCHES

SOURCE: ITT/FLYGT

WATER-TIGHT HATCHES

HATCHES THAT ARE SPECIFIED AS WATER-TIGHT SHALL MEET THE FOLLOWING ADDITIONAL CRITERIA:

1. INCLUDE A RESILIENT GASKET AROUND THE PERIMETER OF THE HATCH OPENING TO PROVIDE A WATER-TIGHT SEAL
2. BE CAPABLE OF BEING ROUTINELY OPENED AND CLOSED WITHOUT REPLACEMENT OF THE SEAL
3. WHEN CLOSED, BE ABLE TO WITHSTAND A 25-FOOT COLUMN OF WATER WITH MINIMAL LEAKING
4. BE OFFERED BY THE MANUFACTURER AS A "WATER-TIGHT", "FLOOD-TIGHT", "WATER-PROOF" OR "FLOOD-PROOF"

NO.	DATE	REVISION	APP.

FCM Engineers, PC
3300 S. Gessner Rd. Suite 249
T- 713-706-4412
F- 713-706-4410
Tx Firm No. 13481

HATCH
750 TOWN & COUNTRY BLVD
SUITE 650
HOUSTON, TX 77024
P: 832-930-7670
TX FIRM NUMBER: F-10912

SURVEYED BY:
AMANI ENGINEERING, INC
FB NO. P-6357

STATE OF TEXAS
FRANK C. MBACHU
108363
LICENSED PROFESSIONAL ENGINEER
5/23/2026

CITY OF HOUSTON
HOUSTON PUBLIC WORKS

LIFT STATION RENEWAL & REPLACEMENT PROJECT
TYPICAL SITE DETAILS III

WBS NUMBER	R-000267-0173-4
DRAWING SCALE	N.T.S
CITY OF HOUSTON PM	NUPUR KRISHNAN P.E. N.K.

FOR CITY OF HOUSTON USE ONLY

HOUSTON PUBLIC WORKS
ACCEPTED AND FILED
82825
CITY DRAWING NUMBER
Approval Date 08/14/26
HOUSTON TX

FILE PATH: Y:\2022071 LIFT STATIONS RENEWAL AND REPLACEMENT (HATCH) WBS NO. R-000267-0173-3\Auto CAD\Details\TYPICAL MANHOLE DETAILS Z0C49.dwg
PLOT STYLE: Coh_ctb_230809.ctb
PLOTTED: 8/11/2026 2:15 PM

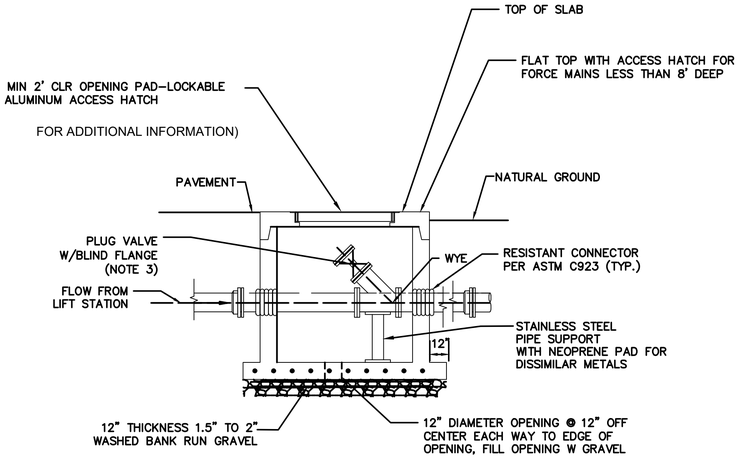

BRAESWOOD N. LIFT STATION

BYPASS MH COVER

8' DIA MH W/ REINFORCED CONC. TOP
WITH HALLIDAY SERIES R1R72 COVER INSERT
U.S.F. FABRICATION MODEL BPC
OR APPROVED EQUAL

SERIES R1R ACCESS DOOR

STANDARD FEATURES:

- AUTO-LOCK T-316 STAINLESS STEEL HOLD OPEN ARM WITH RELEASE HANDLE
- T-316 STAINLESS STEEL HINGES AND ATTACHING HARDWARE
- NON-CORROSIVE LOCKING BAR
- SINGLE LEAF CONSTRUCTION FOR MAXIMUM ACCESS
- 300 LBS. PER SQ. FT. LOAD RATING (1464 KG. PER SQ. METER LOAD RATING)
- EXTRUDED ALUMINUM FRAME
- RECESSED LIFTING HANDLE
- ANCHOR PLATES (ORDER WITHOUT FOR FIBERGLASS OR DROP-IN INSTALLATIONS)
- LIFETIME GUARANTEE

HALLIDAY PRODUCTS
www.HallidayProducts.com
Phone 800-298-1027
Fax 407-298-4534
Sales@HallidayProducts.com

STANDARD SIZES					
QTY.	MODEL NO.	A DIM. INCHES (MM)	B DIM. INCHES (MM)	C DIM. INCHES (MM)	UNIT WT. LBS. (KG.)
	R1R36	24 (610)	35 (890)	41 (1041)	62 (28)
	R1R48	32 (813)	47 (1194)	53 (1346)	86 (39)
	R1R60	40 (1016)	59 (1499)	65 (1651)	136 (62)
	R1R72	48 (1219)	71 (1803)	77 (1956)	175 (79)

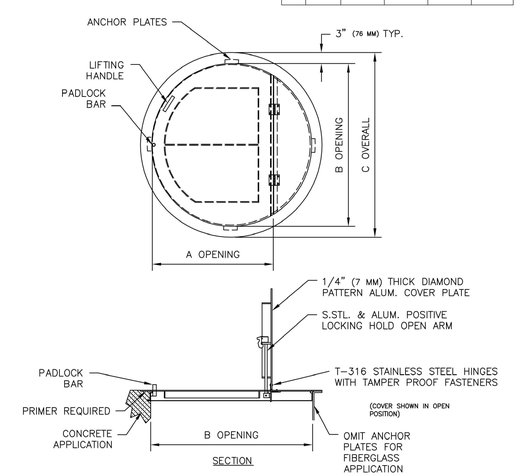

BELOW GROUND BYPASS DETAIL

SYNOTT RD. #1 N. AND POST OAK #2 LIFT STATIONS

BYPASS MH COVERS

8' DIA MH W/ REINFORCED CONC. TOP
WITH HALLIDAY SERIES H2C4848 COVER INSERT
MIN TRAFFIC LOADING H20
OR APPROVED EQUAL

SERIES H2C ACCESS DOOR

STANDARD FEATURES:

- AUTO-LOCK T-316 STAINLESS STEEL HOLD OPEN ARM WITH RELEASE HANDLE
- T-316 STAINLESS STEEL HINGES AND ATTACHING HARDWARE
- T-316 STAINLESS STEEL SLAM LOCK WITH REMOVABLE KEY
- STAINLESS STEEL COMPRESSION SPRING ASSIST
- DOUBLE LEAF CONSTRUCTION
- H20 LOAD RATING (SEE NOTES)
- EXTRUDED ALUMINUM CHANNEL FRAME
- RECESSED LIFTING HANDLE
- LIFETIME GUARANTEE

HALLIDAY PRODUCTS
www.HallidayProducts.com
Phone 800-298-1027
Fax 407-298-4534
Sales@HallidayProducts.com

STANDARD SIZES				
QTY.	MODEL NO.	A DIM. INCHES (MM)	C DIM. INCHES (MM)	UNIT WT. LBS. (KG.)
	H2C4242	42 (1067)	42 (1067)	260 (118)
	H2C4842	48 (1219)	42 (1067)	289 (131)
	H2C4848	48 (1219)	48 (1219)	323 (147)
	H2C5442	54 (1372)	42 (1067)	318 (144)
	H2C5448	54 (1372)	48 (1219)	355 (161)
	H2C6048	60 (1524)	48 (1219)	367 (166)
	H2C6060	60 (1524)	60 (1524)	429 (195)
	H2C7248	72 (1829)	48 (1219)	400 (181)
	H2C7260	72 (1829)	60 (1524)	483 (219)
	H2C7272	72 (1829)	72 (1829)	566 (257)

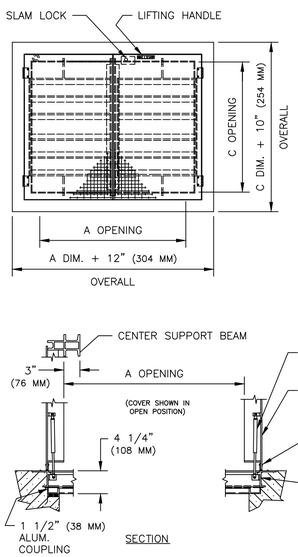

NOTES:

1) SUITABLE FOR USE IN OFF STREET LOCATION WHERE NOT SUBJECTED TO TRAFFIC.

2) PROVIDE A FULL BED OF CLASS "A" CONCRETE UNDER FRAME AND SUPPORT ANGLES.

MANHOLE SIZE	
FORCEMAIN DIAMETER	MANHOLE DIAMETER
8"- 14"	8'- 0"

NOTES:

1. PROVIDE LINED DUCTILE IRON PIPE, THICK, CLASS 53, FOR FORCE MAIN WITHIN 12" OF OUTSIDE FACE OF MANHOLE. JOINTS WITHIN MANHOLE MAY BE FLANGED (AS SHOWN OR GROOVED (PER ASTM 606) WITHIN MANHOLE, WITH 316 STAINLESS STEEL BOLTS.
2. PROTECTIVE COATING SHALL BE APPLIED TO THE MANHOLE INTERIOR AND ACCESS HATCH INTERIOR AND EXTERIOR SURFACES IN ITS ENTIRETY. REFER TO SPECIFICATION 09901.
3. ENSURE MIN CLEARANCE OF 18" ON ALL SIDES. OFFSET VALVE ON HATCH/MH OPENING AS NEEDED TO OBTAIN.
4. HATCH COVER SHALL BE PAINTED FOREST GREEN.

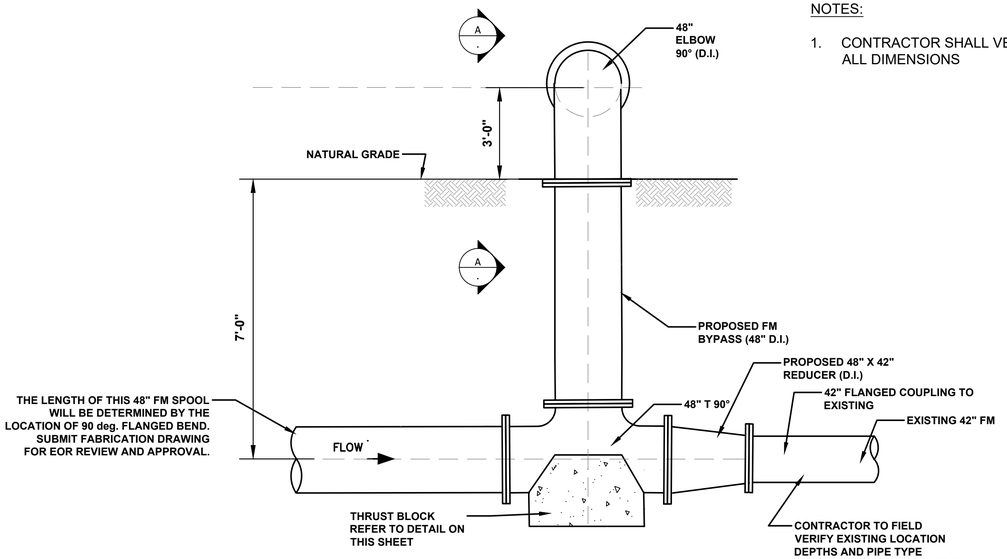

ABOVE GROUND BYPASS DETAIL

SCALE: NONE

NOTES:

1. CONTRACTOR SHALL VERIFY ALL DIMENSIONS

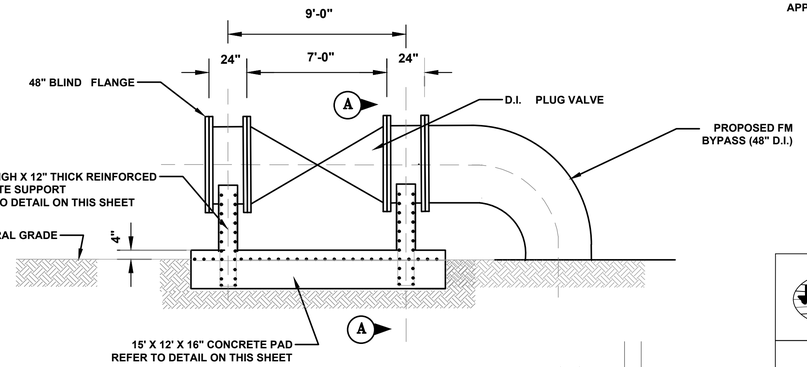

SECTION A-A

SCALE: NONE

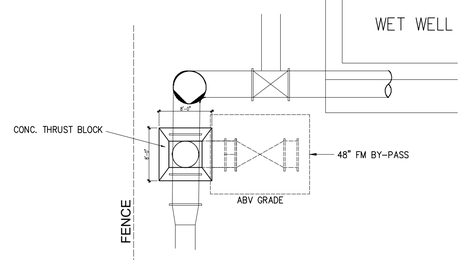

PLAN - THRUST BLOCK LOCATION

SCALE: NTS

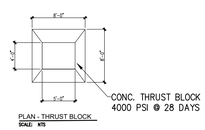

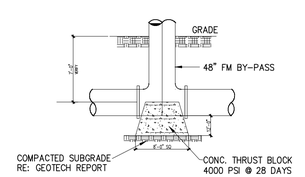

SECTION - THRUST BLOCK

SCALE: NTS

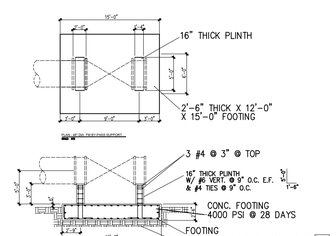

SECTION - 48" DIA. FM BY-PASS SUPPORT

SCALE: NTS

NO.	DATE	REVISION	APP.

FCM Engineers, PC
3300 S. Gessner Rd.
Suite 249
T- 713-706-4412
F- 713-706-4410
Tx Firm No. 13481

HATCH
750 TOWN & COUNTRY BLVD
SUITE 650
HOUSTON, TX 77024
P: 832-930-7670
TX FIRM NUMBER: F-314

SURVEYED BY:
AMANI ENGINEERING, INC
FB NO. P-6357

STATE OF TEXAS
FRANK C. MEACHU
108363
LICENSED
PROFESSIONAL ENGINEER
8/11/2026

CITY OF HOUSTON

HOUSTON PUBLIC WORKS

LIFT STATION RENEWAL & REPLACEMENT PROJECT

TYPICAL MANHOLE DETAILS

WBS NUMBER	R-000267-0173-4
DRAWING SCALE	N.T.S
CITY OF HOUSTON PM	NUPUR KRISHNAN P.E. N.K.

FOR CITY OF HOUSTON USE ONLY

HOUSTON PUBLIC WORKS
ACCEPTED AND FILED
82825
CITY DRAWING NUMBER
Approval Date 08/14/26
HOUSTON TX

Z0C49

SHEET NO. 254 OF 274

DocuSign Envelope ID: 9B122261-CF05-457B-9A65-2650F40B66D5

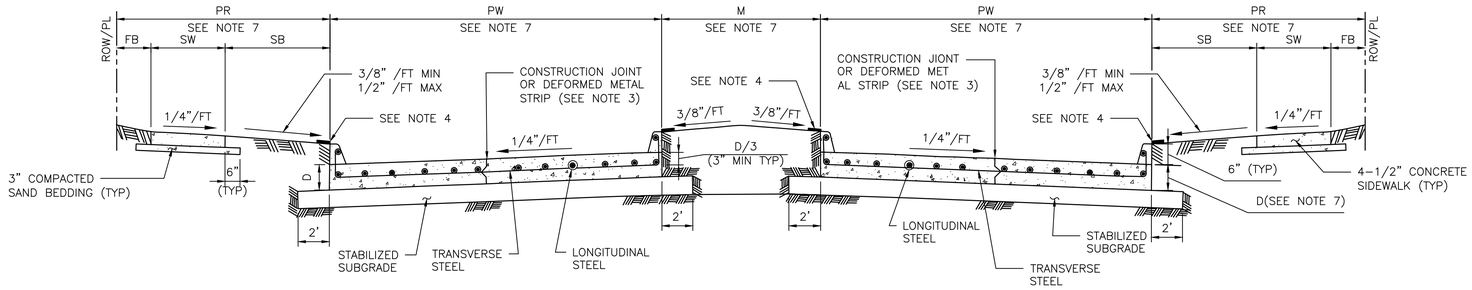

TYPICAL DOUBLE ROADWAY SECTION FOR CONCRETE PAVEMENT WITH CURBS

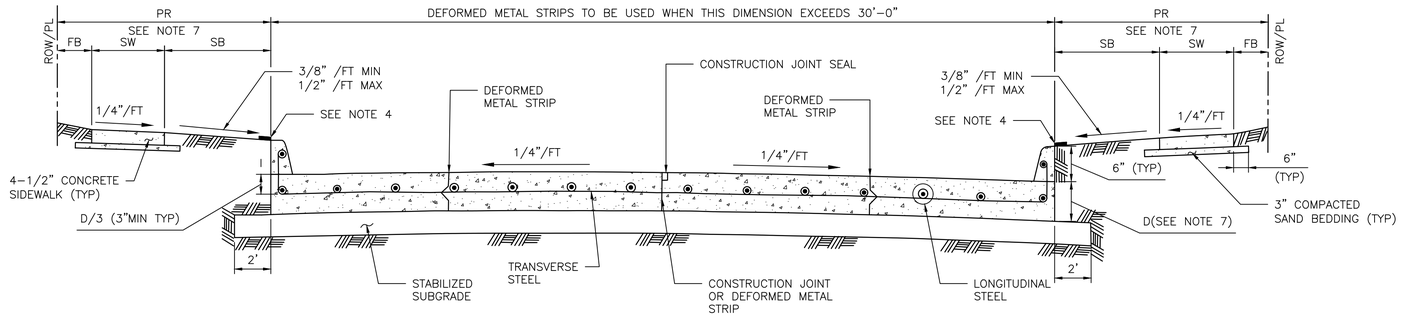

TYPICAL SINGLE ROADWAY SECTION FOR CONCRETE PAVEMENT WITH CURBS

TABLE 1

REINFORCING STEEL BAR SIZES AND SPACINGS FOR VARIOUS PAVEMENT THICKNESSES (D) WITH: MAXIMUM TRANSVERSE CONTROL JOINT SPACING = 20'–0"
MAXIMUM EXPANSION JOINT SPACING = 80'–0"
fc' = 4,000 PSI/28 DAYS AND FY = 60,000 PSI

PAVEMENT THICKNESS 'D' (IN)	PAVEMENT WIDTH 'PW' (FT)	LONGITUDINAL STEEL									TRAVERSE STEEL		
		#4 BARS			#5 BARS			#6 BARS			#4 BARS	#5 BARS	#6 BARS
		NUMBER OF BARS	SPACING (IN)	END BAR SPACING (IN)	NUMBER OF BARS	SPACING (IN)	END BAR SPACING (IN)	NUMBER OF BARS	SPACING (IN)	END BAR SPACING (IN)	SPACING (IN)	SPACING (IN)	SPACING (IN)
6	28	17	20.50	4.00	–	–	–	–	–	–	36	–	–
7	25	17	18.25	4.00	–	–	–	–	–	–	36	–	–
7	35	24	18.00	3.00	–	–	–	–	–	–	36	–	–
7	36	25	17.75	3.00	–	–	–	–	–	–	36	–	–
7	37	25	18.25	3.00	–	–	–	–	–	–	36	–	–
7	41	28	18.00	3.00	–	–	–	–	–	–	36	–	–
7	45	31	17.75	3.75	–	–	–	–	–	–	36	–	–
8	25	20	15.50	2.75	13	24.50	3.0	–	–	–	36	36	–
8	34	27	15.50	2.50	17	25.00	4.0	–	–	–	36	36	–
8	35	27	16.00	2.00	18	24.25	4.0	–	–	–	36	36	–
8	36	28	15.75	3.25	18	25.00	3.0	–	–	–	30	36	–
8	44	24	15.75	4.00	22	24.75	4.0	–	–	–	30	36	–
8	45	35	15.75	2.25	23	24.25	3.0	–	–	–	30	36	–
9	25	22	14.00	3.00	14	22.50	4.0	–	–	–	36	36	–
9	34	31	13.50	2.00	19	22.25	3.5	–	–	–	30	36	–
9	35	31	13.75	3.75	20	21.75	3.5	–	–	–	30	36	–
9	36	32	13.75	3.00	21	21.25	3.5	–	–	–	30	36	–
9	44	39	13.75	2.75	25	21.75	3.0	–	–	–	24	36	–
9	45	39	14.00	4.00	26	21.25	4.5	–	–	–	24	36	–
10	25	24	12.75	3.50	17	18.25	4.0	–	–	–	36	36	36
10	34	33	12.50	4.00	21	20.00	4.0	–	–	–	30	36	36
10	35	34	12.50	3.75	23	18.75	4.0	–	–	–	30	36	36
10	36	35	12.50	3.50	24	18.50	3.0	–	–	–	30	36	36
10	44	44	12.00	4.00	29	18.50	4.5	–	–	–	24	36	36
10	45	44	12.50	3.00	29	19.00	3.0	–	–	–	24	36	36
11	25	27	11.25	3.00	17	18.25	4.0	12	26.75	3	36	36	36
11	34	36	11.50	2.75	24	17.50	2.5	17	25.00	4	24	36	36
11	35	37	11.50	3.00	24	18.00	3.0	17	25.75	4	24	36	36
11	36	40	11.00	2.00	25	17.75	3.0	17	26.50	4	24	36	36
11	44	48	11.125	2.50	30	18.00	3.0	21	26.00	4	24	36	36
11	45	49	11.125	3.00	31	17.75	4.0	22	25.50	3	24	36	36
12	25	–	–	–	19	16.25	4.0	13	24.50	3	36	36	36
12	34	–	–	–	26	16.00	4.0	18	23.50	4	24	36	36
12	35	–	–	–	26	16.50	4.0	19	23.00	3	24	36	36
12	36	–	–	–	27	16.25	4.5	20	22.25	4.5	24	36	36
12	44	–	–	–	33	16.25	4.0	24	22.50	5	24	30	36
12	45	–	–	–	35	15.75	3.0	25	22.25	3	24	30	36

MINIMUM LAP LENGTH (L):
A. # 4 BARS ; L = 22 INCHES
B. # 5 BARS ; L = 27 INCHES
C. # 6 BARS ; L = 32 INCHES

NOTES:

1. THE MAXIMUM WIDTH BETWEEN LONGITUDINAL JOINTS SHALL NOT EXCEED 15'–0".
2. ALL EARTHEN AREAS ARE TO BE HYDROMULCHED UNLESS SHOWN OTHERWISE ON DRAWINGS.
3. CONTRACTOR MAY SAW CUT IN LIEU OF DEFORMED METAL STRIP.
4. USE STRIP OF SOD GRASS TO PREVENT EROSION UNTIL STAND OF GRASS IS ESTABLISHED.
5. AN EQUAL OR LARGER AREA OF WELDED REINFORCEMENT BAR CONFORMING TO ASTM A497, MAY BE SUBSTITUTED FOR REBARS LISTED IN TABLE 1.
6. IF AVAILABLE ROW IS NOT SUFFICIENT TO ACCOMMODATE SIDEWALK WIDTH (SW) ACCORDING TO IDM REQUIREMENTS, ENGINEER SHALL OBTAIN A VARIANCE FROM THE CITY ENGINEER.
7. REFER TO CONTRACT DRAWINGS FOR PAVEMENT WIDTH (PW) AND PAVEMENT THICKNESS (D), MEDIAN (M), PEDESTRIAN REALM (PR), SIDEWALK (SW), FRONTAGE BUFFER (FB), AND SAFETY BUFFER (SB) WIDTHS.

FCM Engineers, PC
3300 S. Gessner Rd.
Suite 249
T- 713-706-4412
F- 713-706-4410
Tx Firm No. 13481

APPROVED BY:
DocuSigned by: Suhail Kanwar 9EF8B0C641F5478...
CITY ENGINEER

APPROVED BY:
DocuSigned by: KHANG NGUYEN 95A29EFDA7584CD...
CITY TRAFFIC ENGINEER

APPROVED BY:
DocuSigned by: Carol Haddock A93C410B72B3453...
DIRECTOR OF HOUSTON PUBLIC WORKS

EFF DATE: NOV–27–2023

DWG NO: 02751–01

HATCH
750 TOWN & COUNTRY BLVD
SUITE 650
HOUSTON, TX 77024
P: 832–930–7670
TX FIRM NUMBER: F–314

SURVEYED BY:
AMANI ENGINEERING, INC
FB NO. P–6357

STATE OF TEXAS
FRANK C. MEACHU
108363
LICENSED
PROFESSIONAL ENGINEER
3/14/2026

CITY OF HOUSTON
HOUSTON PUBLIC WORKS STANDARD

CONCRETE PAVEMENT DETAILS

WBS NUMBER
R–000267–0173–4

DRAWING SCALE
NOT TO SCALE

CITY OF HOUSTON PM
NUPUR KRISHNAN P.E. N.K.

FOR CITY OF HOUSTON USE ONLY
HOUSTON PUBLIC WORKS
ACCEPTED AND FILED
82825
CITY DRAWING NUMBER
Approval Date 08/14/26
HOUSTON TX

Z0C49A

SHEET NO. 254A OF 274

DISCLAIMER:
THE USE OF THIS STANDARD IS GOVERNED BY THE TEXAS ENGINEERING PRACTICE ACT. THE DESIGN REQUIREMENTS ON THIS STANDARD DO NOT PURPORT TO ADDRESS ALL OF THE SAFETY CONCERNS ASSOCIATED WITH THEIR USE. THE ENGINEER OF RECORD (EOR) IS TO REVIEW THESE DESIGN REQUIREMENTS AND BY AUTHORIZING THEIR USE, ACCEPTS RESPONSIBILITY FOR THEIR APPLICABILITY, ADEQUACY AND SAFETY. NO WARRANTY OF ANY KIND IS MADE BY THE CITY OF HOUSTON FOR ANY PURPOSES WHATSOEVER. THE CITY OF HOUSTON ASSUMES NO RESPONSIBILITY FOR INCORRECT RESULTS OR DAMAGES RESULTING FROM ITS USE.

FILE PATH: Y:\2022071 LIFT STATIONS RENEWAL AND REPLACEMENT (HATCH) WBS NO. R-000267-0173-3\Auto CAD\Details\TYPICAL SITE DETAILS - C49B.dwg
PLOT STYLE: Coh_ctb_230809.ctb
PLOTTED: 6/5/2026 9:29 AM

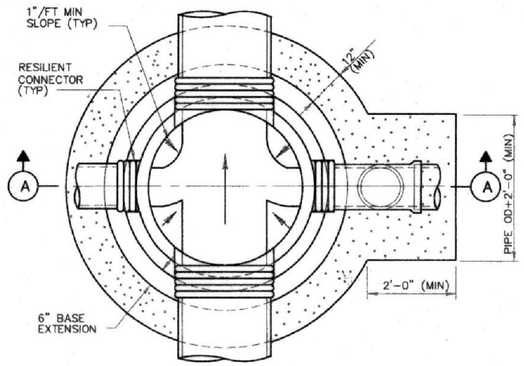

FOUNDATION PLAN

NOTES:

1. DEPTH OF MANHOLE DETERMINES SECTIONS REQUIRED.
2. PRECAST CONCRETE RINGS SHALL BE PROVIDED FOR A COMBINED ADJUSTMENT HEIGHT OF AT LEAST 12". THE TOTAL HEIGHT OF THE ADJUSTMENT RINGS SHALL NOT EXCEED 1'-6".
3. MANHOLE WALL THICKNESS FOR DEPTH EXCEEDING 12'-0" SHALL BE DETERMINED TO MEET LOADING CONDITIONS. MIN THICKNESS 5".
4. MANHOLE DROP AND INTERSECTING PIPES SHALL BE INSTALLED ONLY WHEN CALLED FOR IN PLAN AND PROFILE DRAWING.
5. ALTERNATE ECCENTRIC CONE AND/OR TRANSITION SECTION MAY BE USED.
6. SEAT MANHOLE FRAME IN SEALANT PER COH STANDARD SPECIFICATION.
7. OMIT CEMENT MORTAR WHEN MANHOLE IS LOCATED IN PAVED AREAS.
8. MIN REINFORCING IN THE PRECAST CONCRETE BASE SHALL BE # 5 @ 8 EW.
9. WHERE DIMENSIONAL RESTRICTIONS DICTATE, THE MANHOLE BASE HEIGHT SHALL BE ADJUSTED TO HAVE THE UPPER INLET PIPE OF THE DROP ENTER INTO THE 4'-0" DIAMETER RISER SECTION.

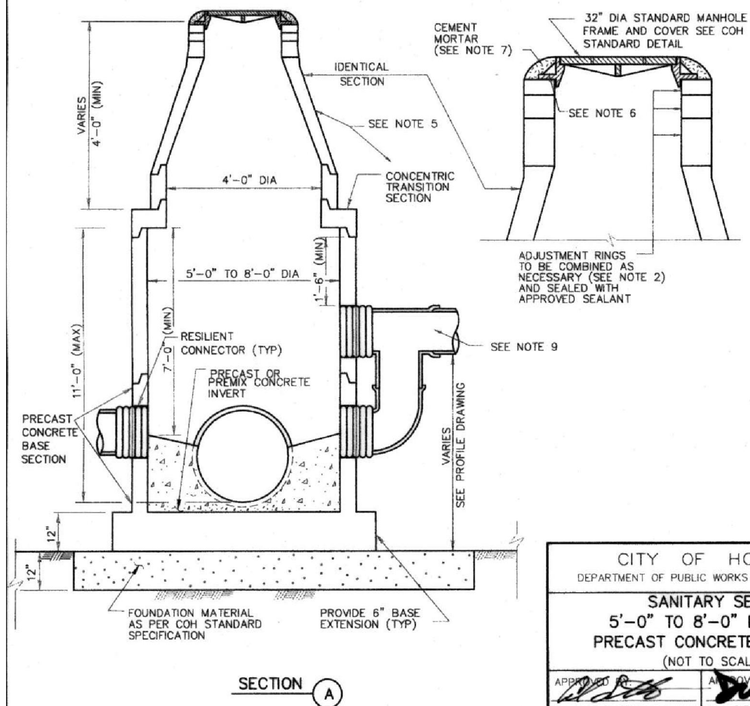

SECTION (A)

CITY OF HOUSTON DEPARTMENT OF PUBLIC WORKS AND ENGINEERING	
SANITARY SEWER 5'-0" TO 8'-0" DIAMETER PRECAST CONCRETE MANHOLE (NOT TO SCALE)	
APPROVED BY: CITY ENGINEER	APPROVED BY: DIRECTOR OF PUBLIC WORKS AND ENGINEERING
EFF DATE: JULY-01-2010	DWG NO: 02082-03

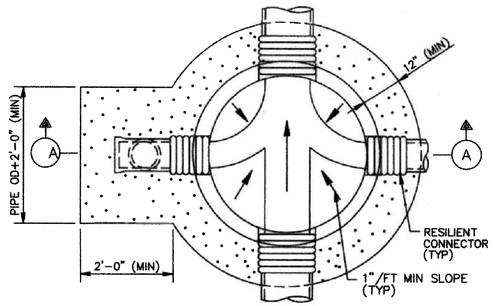

FOUNDATION PLAN

NOTES:

1. DEPTH OF MANHOLE DETERMINES SECTIONS REQUIRED.
2. PRECAST CONCRETE RINGS SHALL BE PROVIDED FOR A COMBINED ADJUSTMENT HEIGHT OF AT LEAST 12". THE TOTAL HEIGHT OF THE ADJUSTMENT RINGS SHALL NOT EXCEED 1'-6".
3. MANHOLE WALL THICKNESS FOR DEPTH EXCEEDING 12'-0" SHALL BE DETERMINED TO MEET LOADING CONDITIONS. MIN THICKNESS 5".
4. MANHOLE DROP AND INTERSECTING PIPES SHALL BE INSTALLED ONLY WHEN CALLED FOR IN PLAN AND PROFILE DRAWING.
5. SEAT MANHOLE FRAME IN SEALANT PER COH STANDARD SPECIFICATION.
6. ECCENTRIC PRECAST CONCRETE MANHOLE MAY BE USED.
7. OMIT CEMENT MORTAR WHEN MANHOLE IS LOCATED IN PAVED AREAS.
8. MIN REINFORCING IN THE PRECAST CONCRETE BASE SHALL BE # 5 @ 8 EW.

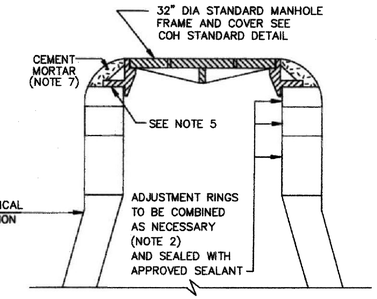

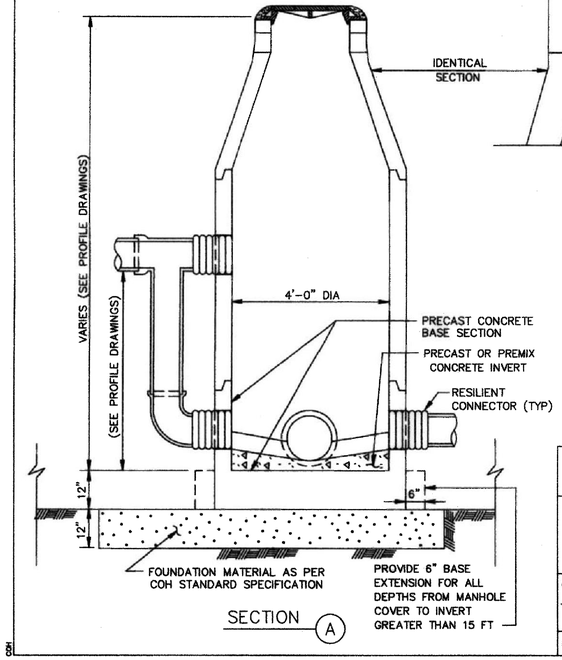

SECTION (A)

CITY OF HOUSTON DEPARTMENT OF PUBLIC WORKS AND ENGINEERING	
SANITARY SEWER 4'-0" DIAMETER PRECAST CONCRETE MANHOLE (NOT TO SCALE)	
APPROVED BY: CITY ENGINEER	APPROVED BY: DIRECTOR OF PUBLIC WORKS AND ENGINEERING
EFF DATE: JULY-01-2010	DWG NO: 02082-02

NO.	DATE	REVISION	APP.

FCM Engineers, PC
3300 S. Gessner Rd.
Suite 249
T- 713-706-4412
F- 713-706-4410
Tx Firm No. 13481

HATCH
750 TOWN & COUNTRY BLVD
SUITE 650
HOUSTON, TX 77024
P: 832-930-7670
TX FIRM NUMBER: F-314

SURVEYED BY:
AMANI ENGINEERING, INC
FB NO. P-6357

STATE OF TEXAS
FRANK C. MEACHU
108363
LICENSED
PROFESSIONAL ENGINEER
3/14/2026

CITY OF HOUSTON
HOUSTON PUBLIC WORKS

LIFT STATION RENEWAL & REPLACEMENT PROJECT
TYPICAL MANHOLE DETAILS II

WBS NUMBER	FOR CITY OF HOUSTON USE ONLY
R-000267-0173-4	HOUSTON PUBLIC WORKS ACCEPTED AND FILED 82825 CITY DRAWING NUMBER Approval Date 08/14/26 HOUSTON TX
DRAWING SCALE	
N.T.S	
CITY OF HOUSTON PM	
NUPUR KRISHNAN P.E. N.K.	

Z0C49B SHEET NO. 254B OF 274

GENERAL NOTES FOR STRUCTURES

CONCRETE

1. DESIGN SHALL CONFORM TO THE LATEST BUILDING CODE REQUIREMENTS FOR STRUCTURAL CONCRETE (ACI-318) WITH SPECIAL REQUIREMENTS OF ENVIRONMENTAL ENGINEERING CONCRETE STRUCTURES (ACI-350). THE DESIGN SHALL CONFORM TO THE LATEST VERSION OF INTERNATIONAL BUILDING CODE. ADOPTED BY THE CITY OF HOUSTON.
2. ALL REINFORCING BARS SHALL CONFORM TO ASTM A-615, GRADE 60. ARRANGEMENT AND DETAILS OF REINFORCING STEEL, INCLUDING BAR SUPPORTS AND SPACERS, SHALL BE IN ACCORDANCE WITH THE LATEST ACI DETAILING MANUAL, UNLESS OTHERWISE NOTED.
3. ALL SLAB AND BEAM REINFORCEMENT SHALL HAVE A MINIMUM EXTENSION INTO THE SUPPORT IN ACCORDANCE WITH THE LATEST ACI CODE. IF SUCH EXTENSION IS NOT POSSIBLE, BARS SHALL TERMINATE IN STANDARD HOOKS.
4. HORIZONTAL WALL REINFORCEMENT AND TEMPERATURE REINFORCEMENT SHALL LAP A MINIMUM OF 1.7Ld AT SPLICES. WALL DOWELS AND WALL BAR EXTENSIONS AND ALL STRESS SPLICES SHALL LAP A MINIMUM OF 1.7 Ld, UNLESS OTHERWISE NOTED.
5. WALL OR COLUMNS SHALL HAVE DOWELS FROM FOUNDATIONS OR CONSTRUCTION BELOW OF SAME SIZE AND SPACING AS WALL OR COLUMN VERTICAL STEEL.
6. UNLESS OTHERWISE NOTED ON THE DRAWINGS, CONCRETE COMPRESSIVE STRENGTH AT 28 DAYS SHALL NOT BE LESS THAN THE FOLLOWING:
   - STRUCTURAL MEMBERS, FOUNDATIONS, WALLS AND SUSPENDED SLABS --- 4000 PSI
   - SLABS ON GRADE ---------- 4000 PSI
   - LEAN CONCRETE CLASS B (SEAL SLAB CONCRETE) ---------- 1500 PSI
   - GROUT FILL CLASS H ---------- 3000 PSI
7. UNLESS OTHERWISE SHOWN, THE COVER FOR REINFORCING STEEL SHALL BE AS FOLLOWS:
   - SLABS
     TOP AND BOTTOM OF FORMED SLABS ---------- 2"
     TOP OF WALK AND DRIVEWAY SLABS ---------- 2"
     SURFACES IN CONTACT WITH LIQUID ---------- 2"
     BOTTOM OF SLABS ON FILL OR SOIL ---------- 3"
   - FOOTINGS:
     TOP AND SIDES ---------- 2 1/2"
     BOTTOM ---------- 3"
   - WALLS:
     LESS THAN 12" THICK ---------- 1 1/2"
     12" OR OVER IN THICKNESS WITH POURS LESS THAN 10 FEET HIGH ------- 2"
     12" OR OVER IN THICKNESS WITH POURS MORE THAN 10 FEET HIGH ------ 2 1/2"
   - BEAMS AND GIRDERS:
     COVER AT TOP, BOTTOM OR SIDES OF LONGITUDINAL REINF ---------- 2"
   - COLUMNS:
     COVER FOR VERTICAL BARS ---------- 2"
8. HORIZONTAL AND VERTICAL CONSTRUCTION JOINTS SHOWN OR NOTED ON THE PLANS ARE RECOMMENDED. ANY DEVIATION FROM THOSE SHOWN SHALL HAVE APPROVAL OF THE ENGINEER.
9. ANY STOP IN FRAMED CONCRETE WORK MUST BE MADE IN THE CENTER OF THE SPAN AND INCORPORATE AN APPROVED KEYWAY. REINFORCEMENT SHALL EXTEND THROUGH THESE JOINTS IF REQUIRED FOR CONTINUITY.
10. USE TYPE 'C2' JOINT FOR ALL CONSTRUCTION JOINTS IN WALLS AND SLABS BELOW GRADE AND WALLS WHICH SEPARATE AREAS OF SOIL OR LIQUID FROM PERMANENTLY DRY AREAS SUCH AS TUNNELS, GALLERIES, BASEMENT ROOMS, ETC. USE TYPE 'C1' JOINT AT ALL OTHER CONSTRUCTION JOINTS, UNLESS OTHERWISE NOTED ON DRAWINGS.
11. CONCRETE WALLS AND PARTITIONS SHALL BE POURED IN MAXIMUM LENGTHS OF 40 FEET BETWEEN VERTICAL CONSTRUCTION JOINTS.
12. ALL CONCRETE SLABS OVER 8" IN THICKNESS, REINFORCED WITH BARS, AND POURED AGAINST SOIL SHALL BE POURED IN A STRIP PATTERN OF 40 FEET OR LESS IN EACH DIRECTION.
13. ALL EXPOSED EDGES OF BEAMS, COLUMNS, SLABS AND WALLS SHALL BE CHAMFERED 3/4" UNLESS MASONRY OR OTHER MEMBERS ARE ERECTED FLUSH WITH THEM.
14. REFER TO ARCHITECTURAL, PROCESS, MECHANICAL AND ELECTRICAL DRAWINGS FOR ALL SLEEVES, PIPES, CONDUITS AND MISCELLANEOUS ANCHORING DEVICES TO BE INCORPORATED IN THE CONSTRUCTION

STRUCTURAL STEEL

1. STRUCTURAL STEEL SHALL CONFORM TO THE LATEST AISC "SPECIFICATION FOR THE DESIGN, FABRICATION AND ERECTION OF STRUCTURAL STEEL FOR BUILDINGS". ALL STRUCTURAL STEEL SHALL BE ASTM A36.
2. ELEVATIONS OF STEEL BEAMS SHOWN ON FRAMING PLANS REFER TO TOP OF FLANGE, UNLESS OTHERWISE NOTED.
3. ALL BOLTED CONNECTIONS SHALL BE MADE WITH 3/4" DIAMETER ASTM A-325 BOLTS EXCEPT AS OTHERWISE SHOWN OR NOTED. ALL CONNECTIONS SHALL BE CAPABLE OF SUPPORTING ONE HALF THE MAXIMUM ALLOWABLE UNIFORM LOAD FOR INDICATED BEAM SIZE AND SPAN IN AISC MANUAL OF STEEL CONSTRUCTION, EXCEPT AS OTHERWISE NOTED.
4. FIELD CONNECTIONS SHALL BE BOLTED, EXCEPT AS OTHERWISE SHOWN OR NOTED.
5. ALL WELDING SHALL CONFORM TO THE LATEST SPECIFICATION OF THE AMERICAN WELDING SOCIETY. ALL WELDED CONNECTIONS SHALL BE MADE WITH AWS A5.1 OR A5.5 E70 XX ELECTRODE.
6. ANCHOR BOLTS AND MISC EMBEDDED STEEL ---------- ASTM A36.
   ANCHOR BOLTS WHICH ARE SUBMERGED, LOCATED ABOVE A LIQUID SURFACE, OR ARE IN A CORROSIVE ATMOSPHERE ---------- 316 SS.
7.. ALL EQUIPMENT ANCHOR BOLT DIMENSIONS AND LOCATIONS SHALL BE VERIFIED FROM CERTIFIED VENDOR DRAWINGS, PRIOR TO CONSTRUCTION.

FOUNDATIONS

1. ALLOWABLE SOIL BEARING PRESSURE, EXCAVATION AND BACKFILL FOR FOUNDATIONS AND STRUCTURES SHALL BE AS RECOMMENDED PER PROJECT GEOTECHNICAL REPORT FOR BISSONNET #4.
2. ALL EXCAVATIONS SHALL BE CARRIED OUT IN THE DRY, AND PROVISIONS SHALL BE MADE TO PREVENT THE BOTTOM OF ALL EXCAVATIONS FROM FREEZING OR FLOODING AT ALL TIMES.
3. ALL FOUNDATIONS SHALL BE CONSTRUCTED IN EXCAVATIONS FREE OF STANDING WATER.
4. BACKFILL MATERIAL, PLACING AND COMPACTION OF BACKFILL SHALL BE IN ACCORDANCE WITH THE DRAWINGS, AND THE CONTRACT SPECIFICATIONS.
5. ALLOWABLE SOIL BEARING PRESSURE, EXCAVATION AND BACKFILL AND STRUCTURES SHALL BE 1500 PSF FOR BRAESWOOD N. LIFT STATION.
6. ALLOWABLE SOIL BEARING PRESSURE, EXCAVATION AND BACKFILL AND STRUCTURES SHALL BE 2500 PSF FOR SYNOTT #1, POST OAK #2, BROOKLET, AND NE SLUDGE LIFT STATIONS.

DESIGN LIVE LOADS:

	POUNDS PER SQ. FT.
FIRST FLOOR CORRIDOR	100
OTHER CORRIDOR	80
ROOF	20
MECHANICAL AREAS, STAIRS, ELEVATOR LOBBIES	100

SUPERIMPOSED DEAD LOAD:

MECHANICAL AND CEILING ---------- 10
FINISHES WHEREVER SHOWN ON ARCH. DRAWINGS ------ AS REQUIRED

LIVE LOAD REDUCTIONS:

LIVE LOAD REDUCTIONS HAVE BEEN TAKEN FOR BEAMS, GIRDERS, AND COLUMNS. THESE REDUCTIONS HAVE BEEN TAKEN ONLY AS ALLOWED BY THE BUILDING CODE.

WIND LOADS:

ULTIMATE DESIGN WIND SPEED (3-SEC.GUST) = 141 MPH
RISK CATEGORY III
EXPOSURE CATEGORY : C

FOR EXTERIOR WINDOW WALL LIMIT OUT-OF-PLANE MOVEMENT TO L/200 AND ALLOW IN-PLANE MOVEMENT OF H/400.

HANDRAIL AND GUARDRAILS ARE DESIGNED TO RESIST A LIVE LOAD OF 50 PLF APPLIED IN ANY DIRECTION AT THE TOP AND TO TRANSFER THIS LOAD THROUGH THE SUPPORTS TO THE STRUCTURE AND TO RESIST A SINGLE CONCENTRATED LOAD OF 200 LBS APPLIED IN ANY DIRECTION.

STAIR TREADS ARE DESIGNED FOR A UNIFORM LIVE LOAD OF 100 LBS AND CONCENTRATED LOAD OF 300 LBS.

ALUMINUM

A1. STRUCTURAL ALUMINUM YIELD STRENGTHS
STRUCTURAL ALUMINUM: Fy=35 KSI
STRUCTURAL ALUMINUM IS ALLOY 6061-T6 OR 6061-T-5.

A2. DIMENSIONS:
TO CENTERLINES OF COLUMNS AND BEAMS,
TOP SURFACES OF BEAMS AND TUBES AND BACKS OF CHANNELS AND ANGLES UNO.

A3. ELEVATIONS:
TOP OF ALUMINUM REFERS TO TOP SURFACE OR FLANGE OF MEMBER UNO.

A4. WHEN FILLET WELD SIZE IS NOT INDICATED, PROVIDE MAXIMUM WELD SIZE
FOR THE MATERIAL THICKNESS IN ACCORDANCE WITH THE LATEST EDITION OF THE "ALUMINUM DESIGN MANUAL" BY THE ALUMINUM ASSOCIATION.

A5. ALUMINUM IN CONTACT WITH DISSIMILAR MATERIALS OR CONCRETE:
CONTACT
SURFACES SHALL BE PROVIDED WITH GALVANIC SEPERATION PER SPECIFICATIONS.

A6. ALL ALUMINUM SHALL BE POWDER COATED DARK GREEN.

STRUCTURAL ABBREVIATIONS

ADDITIONAL	- ADDL
ALTERNATE	- ALT
AND	- &
ANCHOR BOLT	- AB
APPROXIMATE	- APPROX
ARCHITECTURAL	- ARCH
AT	- @
BEAM	- BM
BEARING	- BRG
BELOW FINISH FLOOR	- BFF
BETWEEN	- BTWN
BOTTOM	- BOT
BOTTOM OF	- B/
BUILDING	- BLDG
CAST-IN-PLACE	- CIP
CEILING	- CLG
CENTER LINE	- CL OR ℄
CENTER TO CENTER	- C/C
CLEAR	- CLR
COLUMN	- COL
COMPRESSION	- C OR COMP
CONCRETE	- CONC
CONCRETE MASONRY UNIT	- CMU
CONNECTION (S)	- CONN(S)
CONTINUOUS	- CONT
CONSTRUCTION JOINT	- CJ
CONSTRUCTION	- CONST
DETAIL	- DET
DEAD LOAD	- DL
DEMOLITION	- DEMO
DIAGONAL	- DIAG
DIAMETER	- DIA OR ø
DIMENSION(S)	- DIM(S)
DRAWING(S)	- DWG(S)
DOUBLE	- DBL
DOWEL(S)	- DWL(S)
EACH	- EA
EACH FACE	- EF
EACH WAY	- EW
ELECTRICAL	- ELEC
ELEVATION	- EL
EMBEDMENT	- EMBED
EQUAL	- EQ
EXPANSION JOINT	- EJ
EXPANSION	- EXP
EXISTING	- EXIST OR EX
EXTERIOR	- EXT
FACE TO FACE	- F TO F
FAR SIDE	- FS
FINISHED FLOOR	- FF
FOUNDATION	- FDN
FOOTING	- FTG
GAGE OR GUAGE	- GA
GALVANIZED	- GALV
HEIGHT	- HT
HORIZONTAL	- HORIZ
HIGH POINT	- H.P.
INFORMATION	- INFO
INSIDE DIAMETER	- ID
INSIDE FACE	- IF
INTERIOR	- INT
INTERMEDIATE	- INTERM
JOINT	- JT
JOIST(S)	- JSY(S)
LOW POINT	- L.P.
LIVE LOAD	- LL
LONG	- LG
LONGITUDINAL	- LONG
MANHOLE	- MH
MAXIMUM	- MAX
MINIMUM	- MIN
MISCELLANEOUS	- MISC
NEAR SIDE	- NS
NOMINAL	- NOM
NUMBER	- NO OR # OR NOS
ON CENTER	- OC
OPENING(S)	- OPNG(S)
OPPOSITE	- OPP
OPPOSITE HAND	- OH
OUTSIDE FACE	- OF
OUTSIDE DIAMETER	- OD
OVERALL	- OA
POLYVINYL CHLORIDE	- PVC
REINFORCEMENT	- REINF.
RADIUS	- R
REINFORCED CONCRETE PIPE	- RCP
REQUIRED	- REQ'D
ROOF DRAIN	- RD
SCHEDULE(D)	- SCHED
SCTION	- SECT
SHEET	- SHT
SIMILAR	- SIM
SPACE	- SP
SPECIFICATION(S)	- SPEC(S)
SQUARE FOOT (FEET)	- SF
STAINLESS STEEL	- SS
STANDARD	- STD
STEEL	- STL
STRAIGHT	- STRA
STIRRUPS	- STIR
STRUCTURAL	- STRUCT'L
SYMMETRICAL	- SYMM
TOP	- TP
TOP OF	- T/
THICK	- THK
TOUNGE AND GROOVE	- T & G
TOP AND BOTTOM	- T & B
TOP OF BEAM	- TOB
TOP OF FOOTING	- TOF
TOP OF PIER	- TOP
TOP OF SLAB	- TOS
TOP OF WALL	- TOW
TYPICAL	- TYP
UNLESS OTHERWISE NOTED	- UON
VERTICAL	- VERT
VARIES	- VAR
WELDED WIRE FABRIC	- WWF
WITH	- W/

NO.	DATE	REVISION	APP.

FCM Engineers, PC
3300 S. Gessner Rd.
Suite 249
Houston, Texas 77063
T- 713-706-4412
F- 713-706-4410
Tx Firm No. 13481

HATCH
750 TOWN & COUNTRY BLVD
SUITE 650
HOUSTON, TX 77024
P: 832-930-7670
TX FIRM NUMBER: F-314

STATE OF TEXAS
CHARLES C.A. MGBEIKE
73307
LICENSED PROFESSIONAL ENGINEER
7/20/26

SURVEYED BY:
AMANI ENGINEERING, INC
FB NO. P-6357

CITY OF HOUSTON
HOUSTON PUBLIC WORKS

LIFT STATION RENEWAL & REPLACEMENT PROJECT

STRUCTURAL NOTES

WBS NUMBER	R-000267-0173-4
DRAWING SCALE	AS NOTED
CITY OF HOUSTON PM	NUPUR KRISHNAN P.E. N.K.
ZOS21	SHEET NO. 255 OF 274

FOR CITY OF HOUSTON USE ONLY

HOUSTON PUBLIC WORKS
ACCEPTED AND FILED
82825
CITY DRAWING NUMBER
Approval Date 08/14/26
HOUSTON TX

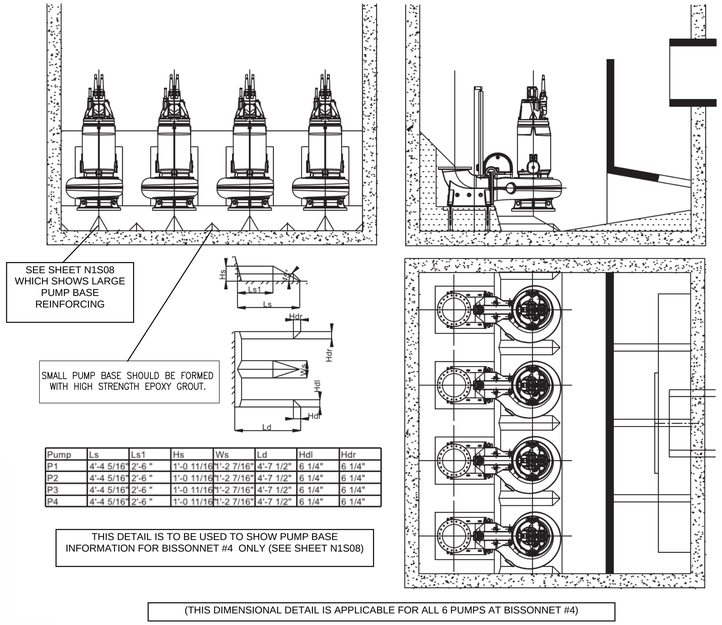

Pump	Ls	Ls1	Hs	Ws	Ld	Hdl	Hdr
P1	4'-4 5/16"	2'-6 "	1'-0 11/16"	1'-2 7/16"	4'-7 1/2"	6 1/4"	6 1/4"
P2	4'-4 5/16"	2'-6 "	1'-0 11/16"	1'-2 7/16"	4'-7 1/2"	6 1/4"	6 1/4"
P3	4'-4 5/16"	2'-6 "	1'-0 11/16"	1'-2 7/16"	4'-7 1/2"	6 1/4"	6 1/4"
P4	4'-4 5/16"	2'-6 "	1'-0 11/16"	1'-2 7/16"	4'-7 1/2"	6 1/4"	6 1/4"

THIS DETAIL IS TO BE USED TO SHOW PUMP BASE INFORMATION FOR BISSONNET #4 ONLY (SEE SHEET N1S08)

(THIS DIMENSIONAL DETAIL IS APPLICABLE FOR ALL 6 PUMPS AT BISSONNET #4)

BISSONNET #4 PUMP BASE DETAIL
CONTINUED FROM SHEET N1S08

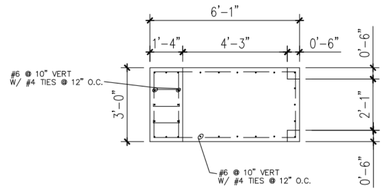

PLAN - THRUST BLOCK
SCALE: NTS

(FOR BISSONNET #4 LIFT STATION ONLY)

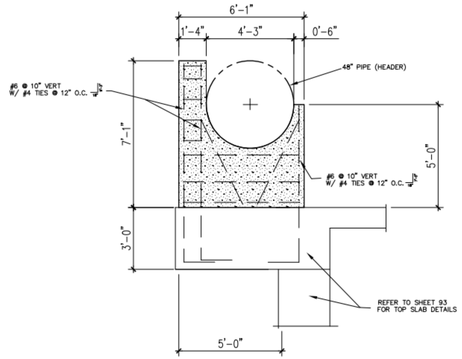

SECTION-THRUST BLOCK
SCALE: NTS

(FOR BISSONNET #4 LIFT STATION ONLY)
)

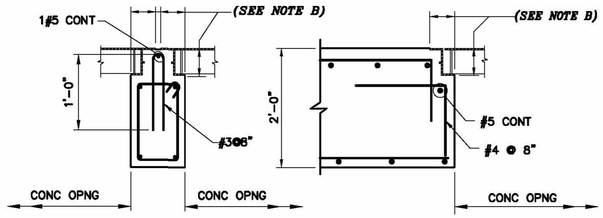

TYPICAL HATCH FRAME SECTIONS

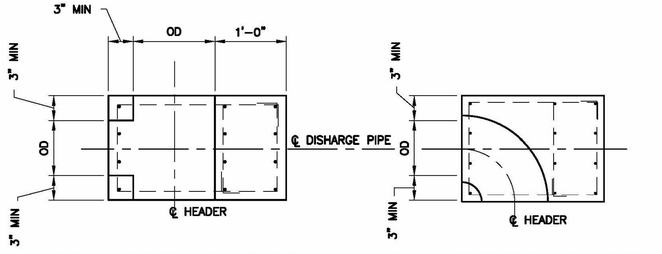

PLAN – THRUST BLOCK @ TEE

PLAN – THRUST BLOCK @ ELBOW

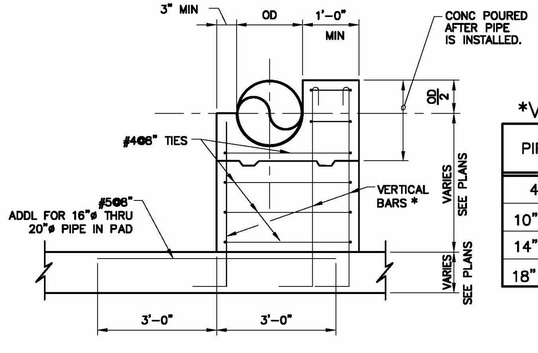

ELEVATION

*VERTICAL BARS

PIPE DIA	NO. OF VERT BARS
4" – 8"	3 – 2#5
10" – 12"	3 – 3#5
14" – 16"	3 – 4#5
18" – 20"	3 – 4#5

TYPICAL THRUST BLOCK DETAILS

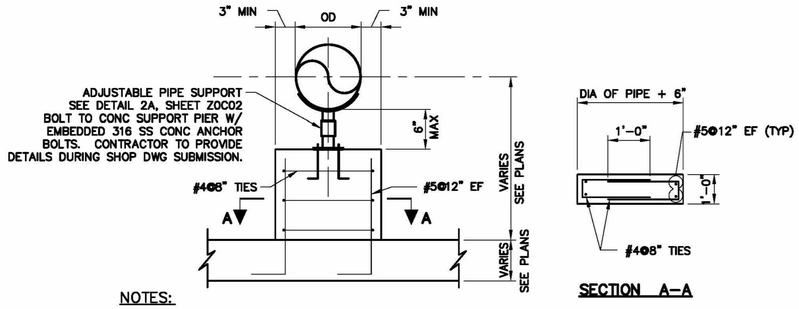

SECTION A–A

NOTES:

1. CONCRETE SUPPORT PIER IS NOT A THRUST BLOCK AND IS NOT INTENDED TO REPLACE THRUST BLOCK PROVIDED AT OTHER LOCATIONS.
2. PLACE SUPPORT PIER APPROX 9" TO 24" FROM CHECK VALVE, SEE CIVIL DRAWINGS. DO NOT PLACE SUPPORT PIER ON TOP OF EXPANSION JOINT.
3. PROVIDE CONCRETE PIPE SUPPORT PIER FOR ALL VALVES 14" AND LARGER

TYPICAL CONC PIPE SUPPORT PIER DETAIL

NO.	DATE	REVISION	APP.

FCM Engineers, PC
3300 S. Gessner Rd.
Suite 249
Houston, Texas 77063
T- 713-706-4412
F- 713-706-4410
Tx Firm No. 13481

HATCH
750 TOWN & COUNTRY BLVD
SUITE 650
HOUSTON, TX 77024
P: 832-930-7670
TX FIRM NUMBER: F-314

STATE OF TEXAS
CHARLES C.A. MGBEIKE
73307
LICENSED
PROFESSIONAL ENGINEER
05/19/26

SURVEYED BY:
AMANI ENGINEERING, INC
FB NO. P-6357

CITY OF HOUSTON
HOUSTON PUBLIC WORKS

LIFT STATION RENEWAL & REPLACEMENT PROJECT
STRUCTURAL STANDARD DETAILS
(SHEET 1 OF 2)

WBS NUMBER	FOR CITY OF HOUSTON USE ONLY
R-000267-0173-4	HOUSTON PUBLIC WORKS ACCEPTED AND FILED 82825 CITY DRAWING NUMBER Approval Date 08/14/26 HOUSTON TX
DRAWING SCALE	
AS NOTED	
CITY OF HOUSTON PM	
NUPUR KRISHNAN P.E. N.K.	

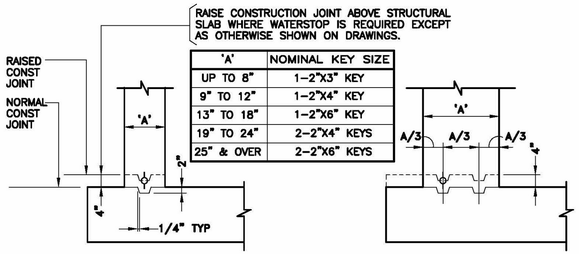

'A'	NOMINAL KEY SIZE
UP TO 8"	1–2"X3" KEY
9" TO 12"	1–2"X4" KEY
13" TO 18"	1–2"X6" KEY
19" TO 24"	2–2"X4" KEYS
25" & OVER	2–2"X6" KEYS

DESIGN ENGINEER TO REVISE DETAIL FOR SPECIFIC PROJECT REQUIREMENTS. DELETE UNECESSARY INFORMATION.

CONSTRUCTION JOINT KEY DETAILS

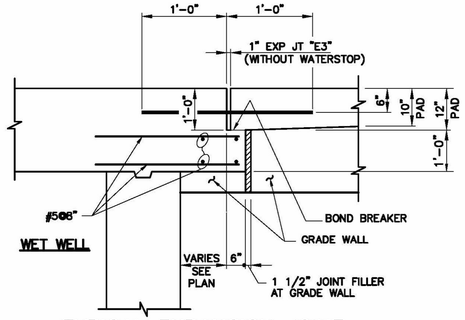

TYPICAL EXPANSION JOINT
(BETWEEN WET WELL AND VALVE PAD)

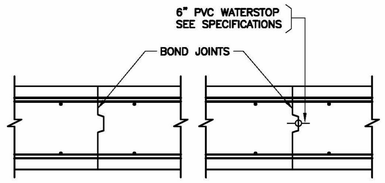

TYPE C1 TYPE C2

CONSTRUCTION JOINTS

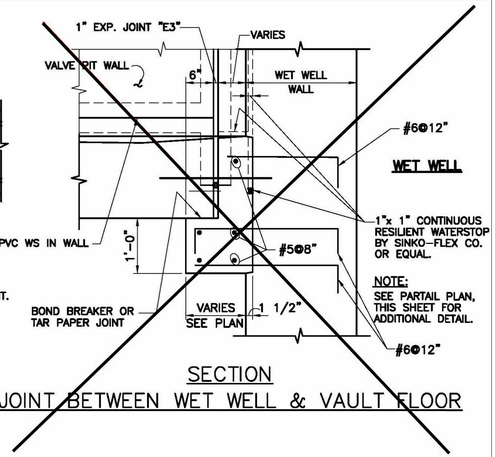

SECTION
JOINT BETWEEN WET WELL & VAULT FLOOR

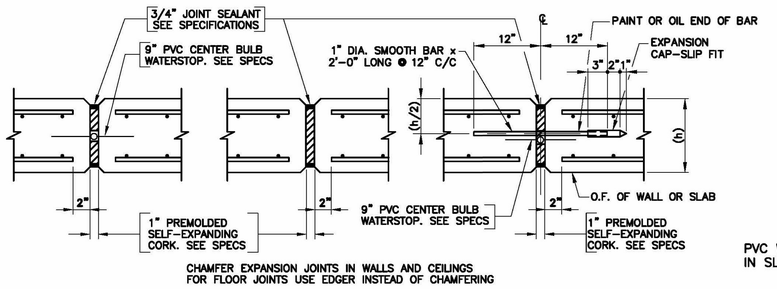

TYPE "E1" TYPE "E2" TYPE "E3"

EXPANSION JOINTS

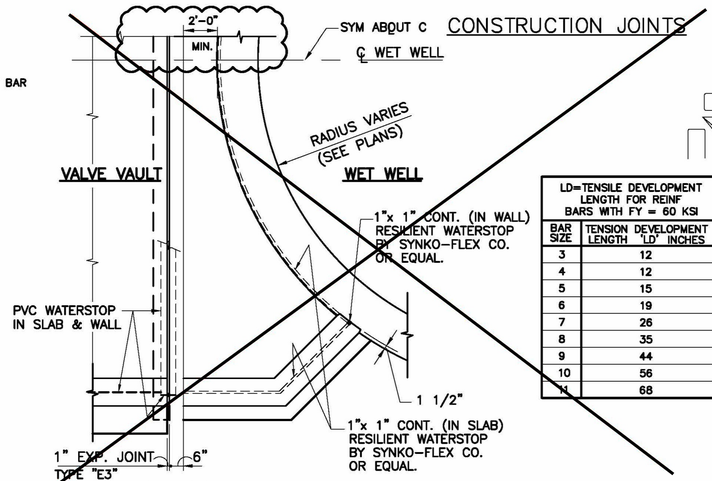

PARTIAL PLAN
JOINT BETWEEN WET WELL & VAULT

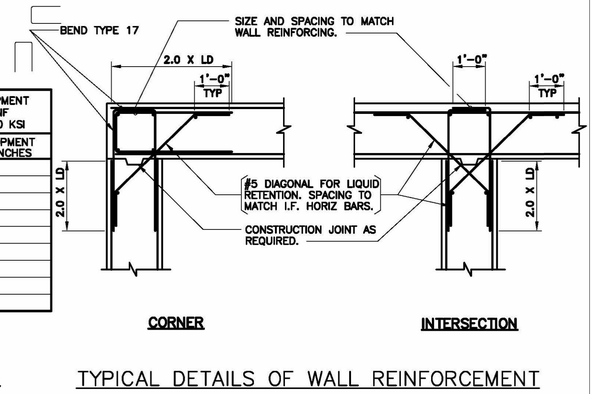

LD=TENSILE DEVELOPMENT LENGTH FOR REINF BARS WITH FY = 60 KSI	
BAR SIZE	TENSION DEVELOPMENT LENGTH 'LD' INCHES
3	12
4	12
5	15
6	19
7	26
8	35
9	44
10	56
11	68

CORNER INTERSECTION

TYPICAL DETAILS OF WALL REINFORCEMENT

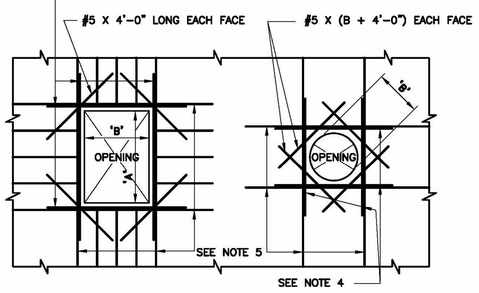

ADDITIONAL REINFORCING STEEL AT OPENINGS IN WALLS AND SLABS

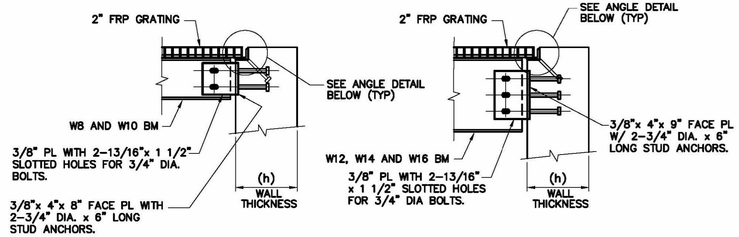

TYPICAL BEAM CONNECTION TO CONCRETE WALL

TYP. BEAM CONNECTION TO CONCRETE WALL

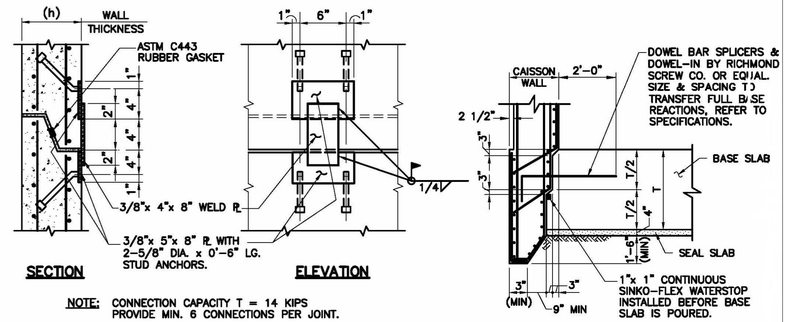

PRECAST UNITS CONNECTION DETAILS
CAISSON CONSTRUCTION METHOD

CAISSON METHOD
TYP BASE DETAIL
(FOR PC AND CIP WET WELL)

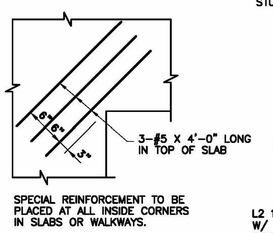

SLAB DETAIL AT
RE – ENTRANT CORNER

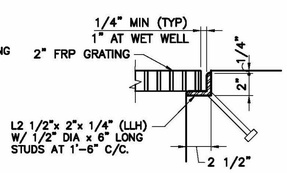

TYPICAL ANGLE DETAIL

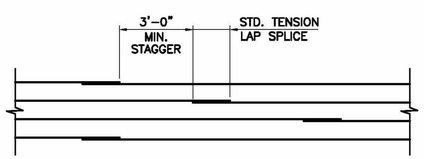

SPLICE LAYOUT FOR HOOP BARS
(WET WELL WALL)

NO.	DATE	REVISION	APP.

FCM Engineers, PC
3300 S. Gessner Rd.
Suite 249
Houston, Texas 77063
T- 713-706-4412
F- 713-706-4410
Tx Firm No. 13481

HATCH
750 TOWN & COUNTRY BLVD
SUITE 650
HOUSTON, TX 77024
P: 832–930–7670
TX FIRM NUMBER: F–314

SURVEYED BY:
AMANI ENGINEERING, INC
FB NO. P–6357

STATE OF TEXAS
CHARLES C.A. MGBEIKE
73307
LICENSED PROFESSIONAL ENGINEER
05/19/26

CITY OF HOUSTON
HOUSTON PUBLIC WORKS

LIFT STATION RENEWAL & REPLACEMENT PROJECT
STRUCTURAL STANDARD DETAILS (SHEET 2 OF 2)

WBS NUMBER	FOR CITY OF HOUSTON USE ONLY
R–000267–0173–4	
DRAWING SCALE	
AS NOTED	
CITY OF HOUSTON PM	
NUPUR KRISHNAN P.E. N.K.	
Z0S23	SHEET NO. 257 OF 274

HOUSTON PUBLIC WORKS
ACCEPTED AND FILED
82825
CITY DRAWING NUMBER
Approval Date 08/14/26
HOUSTON TX

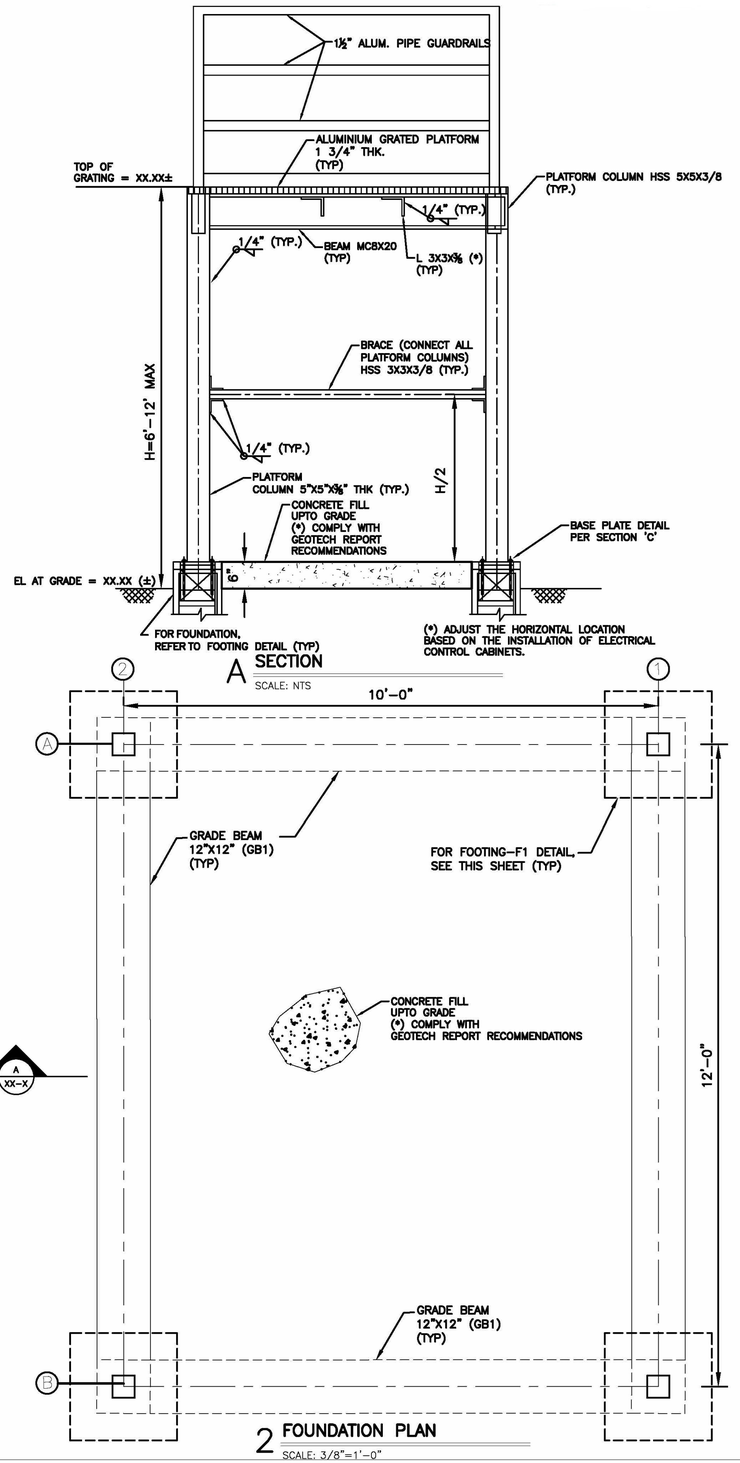

A SECTION

SCALE: NTS

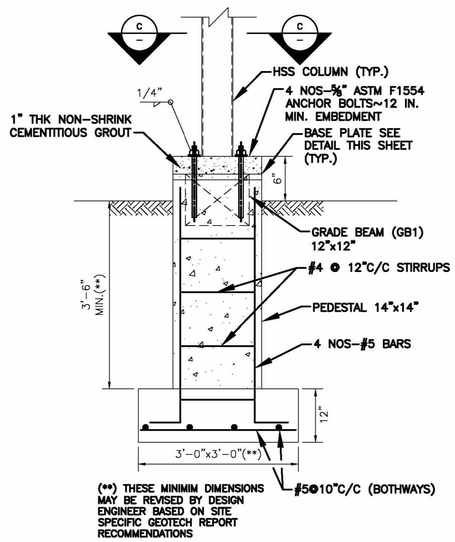

(**) THESE MINIMIM DIMENSIONS MAY BE REVISED BY DESIGN ENGINEER BASED ON SITE SPECIFIC GEOTECH REPORT RECOMMENDATIONS

FOOTING F1 DETAIL

SCALE: 3/4"=1'-0"

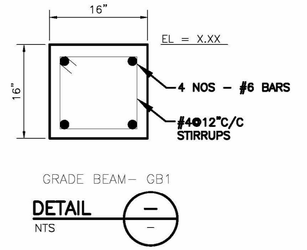

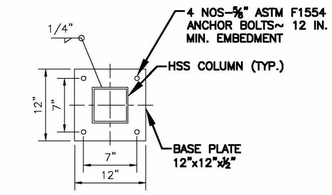

C BASE PLATE DETAIL

SCALE: NTS

2 FOUNDATION PLAN

SCALE: 3/8"=1'-0"

1 PLATFORM FRAMING PLAN AT ELEV.

SCALE: NTS

(*) ADJUST THE HORIZONTAL LOCATION BASED ON THE INSTALLATION OF ELECTRICAL CONTROL CABINETS.

NO.	DATE	REVISION	APP.

FCM Engineers, PC
3300 S. Gessner Rd.
Suite 249
Houston, Texas 77063
T- 713-706-4412
F- 713-706-4410
Tx Firm No. 13481

HATCH
750 TOWN & COUNTRY BLVD
SUITE 650
HOUSTON, TX 77024
P: 832-930-7670
TX FIRM NUMBER: F-314

STATE OF TEXAS
CHARLES C.A. MGBEIKE
73307
LICENSED PROFESSIONAL ENGINEER
05/19/26

SURVEYED BY:
AMANI ENGINEERING, INC
FB NO. P-6357

CITY OF HOUSTON

HOUSTON PUBLIC WORKS

LIFT STATION RENEWAL & REPLACEMENT PROJECT

ELEVATED ELECTRICAL CABINET PLATFORM (SHEET 1 OF 3)

WBS NUMBER
R-000267-0173-4
DRAWING SCALE
AS NOTED
CITY OF HOUSTON PM
NUPUR KRISHNAN P.E. N.K.

FOR CITY OF HOUSTON USE ONLY

HOUSTON PUBLIC WORKS
ACCEPTED AND FILED
82825
CITY DRAWING NUMBER
Approval Date 08/14/26
HOUSTON TX

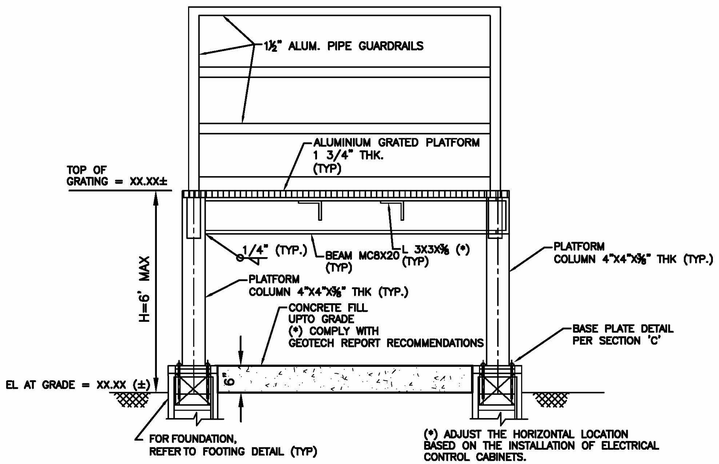

A SECTION

SCALE: NTS

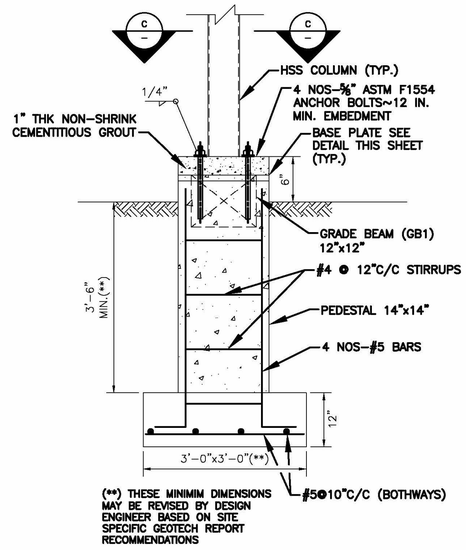

FOOTING F1 DETAIL

SCALE: 3/4"=1'–0"

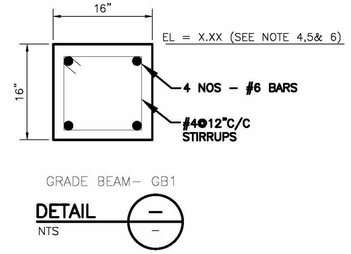

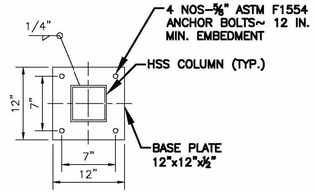

C BASE PLATE DETAIL

SCALE: NTS

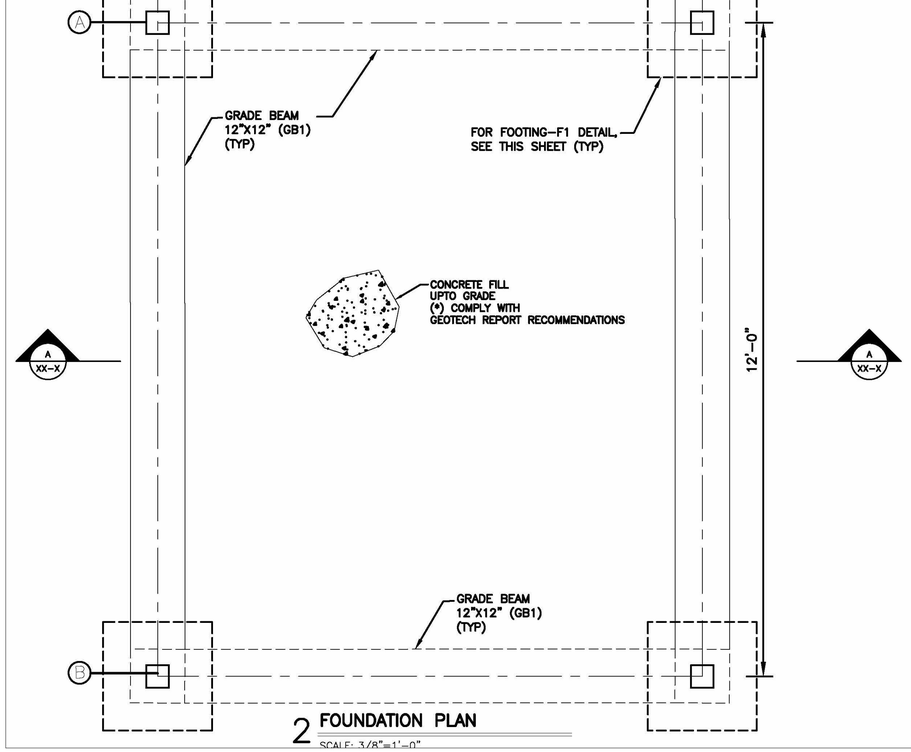

2 FOUNDATION PLAN

SCALE: 3/8"=1'–0"

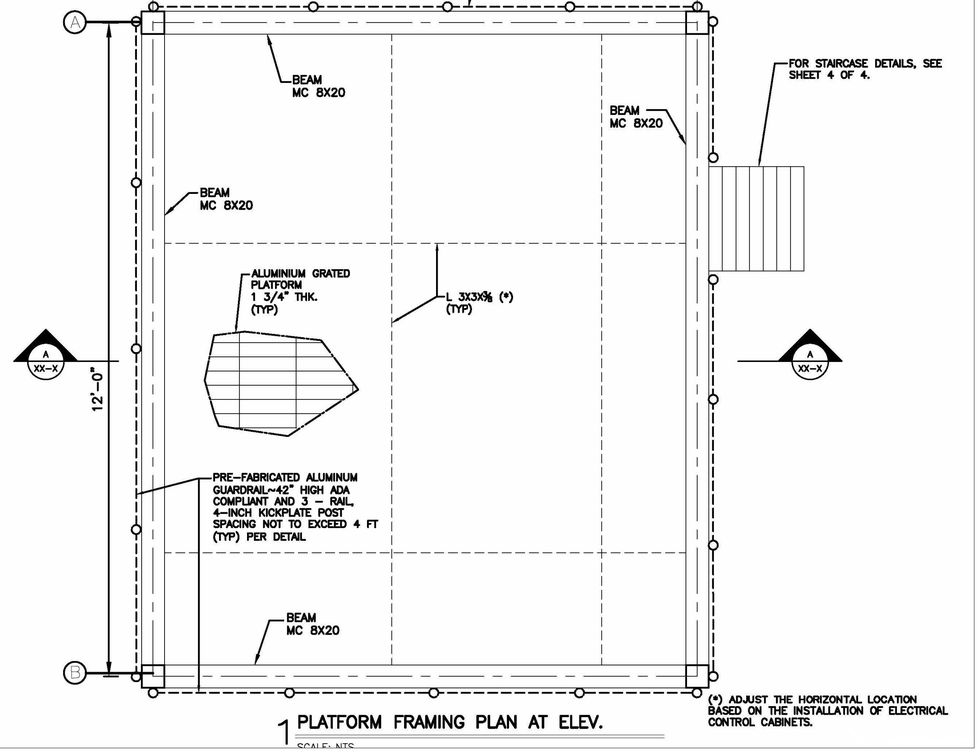

1 PLATFORM FRAMING PLAN AT ELEV.

SCALE: NTS

(*) ADJUST THE HORIZONTAL LOCATION BASED ON THE INSTALLATION OF ELECTRICAL CONTROL CABINETS.

NO.	DATE	REVISION	APP.

FCM Engineers, PC
3300 S. Gessner Rd.
Suite 249
Houston, Texas 77063
T- 713-706-4412
F- 713-706-4410
Tx Firm No. 13481

HATCH
750 TOWN & COUNTRY BLVD
SUITE 650
HOUSTON, TX 77024
P: 832-930-7670
TX FIRM NUMBER: F-314

SURVEYED BY:
AMANI ENGINEERING, INC
FB NO. P-6357

STATE OF TEXAS
CHARLES C.A. MGBEIKE
73307
LICENSED PROFESSIONAL ENGINEER
05/19/26

CITY OF HOUSTON

HOUSTON PUBLIC WORKS

LIFT STATION RENEWAL & REPLACEMENT PROJECT

ELEVATED ELECTRICAL CABINET PLATFORM (SHEET 2 OF 3)

WBS NUMBER
R-000267-0173-4
DRAWING SCALE
AS NOTED
CITY OF HOUSTON PM
NUPUR KRISHNAN P.E. N.K.

FOR CITY OF HOUSTON USE ONLY

HOUSTON PUBLIC WORKS
ACCEPTED AND FILED
82825
CITY DRAWING NUMBER
Approval Date 08/14/26
HOUSTON TX

Z0S25

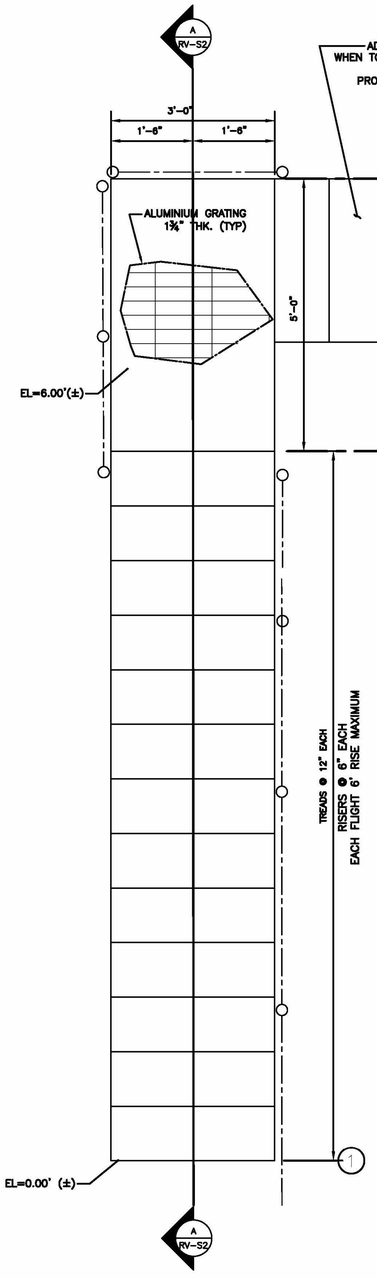

1 STAIRCASE PLAN

SCALE: 3/4"=1'-0"

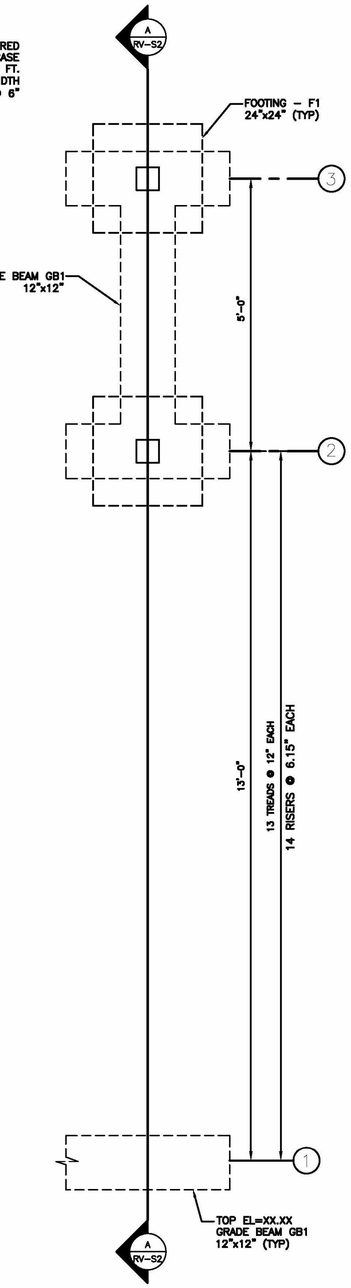

2 STAIRCASE FOUNDATION PLAN

SCALE: 3/4"=1'-0"

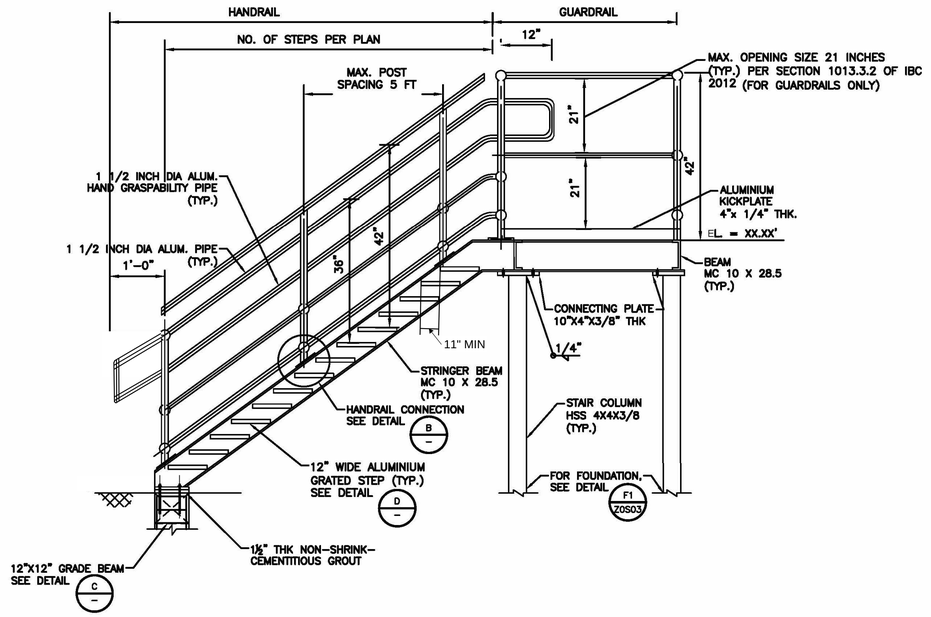

A SECTION

SCALE: NTS

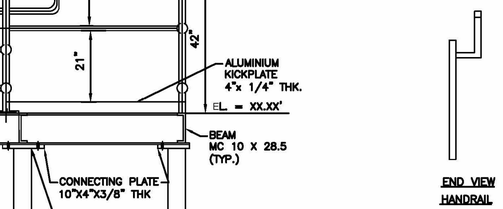

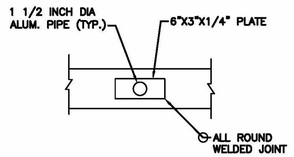

B TOP MOUNTED HANDRAIL ON STRINGER BEAM

SCALE: NTS

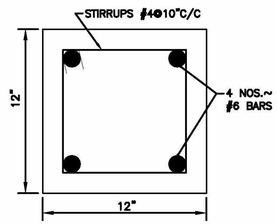

C GRADE BEAM (GB1)

SCALE: NTS

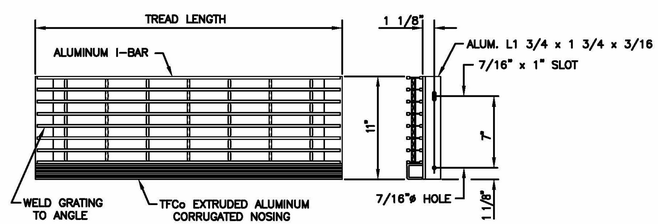

D STAIR TREAD CONNECTION ON STRINGER BEAM

SCALE: NTS

NO.	DATE	REVISION	APP.

FCM Engineers, PC
3300 S. Gessner Rd.
Suite 249
Houston, Texas 77063
T- 713-706-4412
F- 713-706-4410
Tx Firm No. 13481

HATCH
750 TOWN & COUNTRY BLVD
SUITE 650
HOUSTON, TX 77024
P: 832-930-7670
TX FIRM NUMBER: F-314

SURVEYED BY:
AMANI ENGINEERING, INC
FB NO. P-6357

STATE OF TEXAS
CHARLES C.A. MGBEIKE
73307
LICENSED PROFESSIONAL ENGINEER
05/19/26

CITY OF HOUSTON
HOUSTON PUBLIC WORKS

LIFT STATION RENEWAL & REPLACEMENT PROJECT

ELEVATED ELECTRICAL CABINET PLATFORM (SHEET 3 OF 3)

WBS NUMBER	FOR CITY OF HOUSTON USE ONLY
R-000267-0173-4	HOUSTON PUBLIC WORKS ACCEPTED AND FILED 82825 CITY DRAWING NUMBER Approval Date 08/14/26 HOUSTON TX
DRAWING SCALE	
AS NOTED	
CITY OF HOUSTON PM	
NUPUR KRISHNAN P.E. N.K.	
Z0S26	SHEET NO. 260 OF 274

SYMBOLS	DESCRIPTION
52 CS	MEDIUM VOLTAGE DRAWOUT TYPE POWER CIRCUIT BREAKER CS-CONTROL SWITCH
(E.O.) FRAME / TRIP	LOW VOLTAGE CIRCUIT BREAKER, 3 POLE UNLESS OTHERWISE NOTED. LSIG IF NOTED MCP IF NOTED ERMS IF NOTED
✳ OR	COMBINATION MOTOR CIRCUIT PROTECTOR AND MAGNETIC MOTOR STARTER, FULL VOLTAGE NON-REVERSING UNLESS OTHERWISE NOTED: ✳ FVR-FULL VOLTAGE REVERSING RVNR-REDUCED VOLTAGE NON-REVERSING 2S1W-TWO SPEED, ONE WINDING 2S2W-TWO SPEED, TWO WINDING
✳ OR	NON-FUSIBLE DISCONNECT SWITCH, 600 VOLT, 3 POLE ✳ AMPERE RATING NOTED IF OTHER THAN 30A
✳ OR F	FUSIBLE DISCONNECT SWITCH, 600 VOLT, 3 POLE, AMPERE RATING AND FUSE SIZE AS NOTED: ✳ AMPERE RATING NOTED IF OTHER THAN 30A ✽ FUSE RATING
MIS OR I	MOTOR ISOLATION SWITCH, HORSEPOWER RATED
	DRAWOUT TYPE EQUIPMENT OR DEVICE
	MEDIUM VOLTAGE CABLE TERMINATION
	MEDIUM VOLTAGE AIR INTERRUPTER SWITCH
	MEDIUM VOLTAGE FUSED AIR INTERRUPTER SWITCH
	MEDIUM VOLTAGE FUSED MOTOR CONTROLLER
30KVA 480V- 120/208Y K-*	TRANSFORMER, RATINGS AND CONNECTIONS AS NOTED. UNLESS OTHERWISE NOTED ON THE SINGLE LINE DIAGRAMS ALL DRY TYPE TRANSFORMERS SERVICING ADMINISTRATIVE AND LABORATORY SPACES SHALL HAVE A K FACTOR OF 13. ALL OTHER DRY TYPE TRANSFORMERS SHALL HAVE A K-4 RATING. ISOLATION TRANSFORMERS SHALL HAVE A K-20 RATING
✳ A:5	CURRENT TRANSFORMER: ✳ QUANTITY A= PRIMARY AMPERES
✳ PV-SV	POTENTIAL TRANSFORMER: ✳ QUANTITY PV= PRIMARY VOLTAGE SV= SECONDARY VOLTAGE
	GENERATOR, RATINGS AND CONNECTIONS AS NOTED
100A ATS-1 N S	TRANSFER SWITCH AUTOMATIC TRANSFER SWITCH (EG ATS-1) MANUAL TRANSFER SWITCH (EG MTS-1) "N" INDICATES NORMAL SOURCE "S" INDICATES STANDBY SOURCE 100A INDICATES CONTINUOUS CURRENT RATING
✳	VARIABLE SPEED DRIVE CONTROLLER ✳ D.C.= D.C. DRIVE CONTROLLER SCR= SILICON CONTROLLED RECTIFIER VFD= VARIABLE FREQUENCY DRIVE AFD= ADJUSTABLE FREQUENCY DRIVE
	VACUUM CONTACTOR
5KW OR E	UNIT HEATER - ELECTRIC HEATING COIL AND FAN
5KW OR U	UNIT HEATER - STEAM OR WATER HEATING COIL AND FAN
M	MOTOR, NUMERAL INDICATES HORSEPOWER
SPD	SURGE PROTECTION DEVICE
VFD	VARIABLE FREQUENCY DRIVE

SYMBOLS	DESCRIPTION
VM ✳	VOLTMETER (WITH SWITCH IF 3-PHASE)
AM ✳	AMMETER (WITH SWITCH IF 3-PHASE)
*	METER ✳ WM- WATTMETER WHM- WATTHOUR METER WHDM- WATTHOUR DEMAND METER WHDR- WATTHOUR DEMAND RECORDER PF- POWER FACTOR METER RT- RUNNING TIME METER TRANSDUCER AX- CURRENT TRANSDUCER WX- WATT TRANSDUCER
#	RELAY, NO. AS INDICATED 25- SYNCHRONISM CHECK RELAY 27- UNDER VOLTAGE RELAY 38- BEARING PROTECTIVE DEVICE 40- LOSS OF EXCITATION RELAY 42- RUNNING CONTACTOR/PILOT RELAY 46- REVERSE PHASE/PHASE BALANCE/CURRENT RELAY 47- PHASE SEQUENCE VOLTAGE RELAY 49- MACHINE OR TRANSFORMER THERMAL RELAY 50- INSTANTANEOUS OVERCURRENT RELAY 50G- INSTANTANEOUS GROUND 51- TIME OVER CURRENT RELAY 51G- TIME OVERCURRENT RELAY, GROUNDING RESISTOR TYPE 51N- TIME OVERCURRENT RELAY, RESIDUAL TYPE 51V- TIME OVERCURRENT RELAY WITH VOLTAGE RESTRAINT 60- NEGATIVE SEQUENCE VOLTAGE RELAY 62- TIME DELAY RELAY 63- OVER PRESSURE RELAY 67- AC DIRECTIONAL OVERCURRENT RELAY 83- AUTOMATIC SELECTIVE CONTROL OR TRANSFER RELAY 86- LOCKING-OUT RELAY 87- DIFFERENTIAL PROTECTIVE RELAY B- SUFFIX INDICATES "BUS" G- SUFFIX INDICATES "GENERATOR" GF- GROUND FAULT ST- SHUNT TRIP T- SUFFIX INDICATES "TRANSFORMER" X- SUFFIX INDICATES "AUXILIARY"
*	SPECIAL CAPACITOR ✳ SC- SURGE CAPACITOR PF- POWER FACTOR CORRECTION CAPACITOR INCLUDING INDUCTIVE LINK AS NEEDED
	PUSH BUTTON, MOMENTARY CONTACT, SPRING RETURN, NORMALLY CLOSED
	PUSH BUTTON, MOMENTARY CONTACT, SPRING RETURN, NORMALLY OPEN
E-STOP	EMERGENCY STOP PUSH BUTTON WITH RED MUSHROOM HEAD OPERATOR (MAINTAINED CONTACT)
✳ N	STOP PUSH BUTTON WITH RED HEAD OPERATOR (MAINTAINED CONTACT) WITH LOCKABLE OPTION ✳: E-STOP ✳: STOP
STOP START	START-STOP PUSH BUTTON CONTROL STATION (MOMENTARY CONTACT) "L" DENOTES LOCKOUT TYPE
STOP START	START-STOP PUSH BUTTON CONTROL STATION, MAINTAINED CONTACT WITH LOCKOUT DEVICE ON STOP
OFF ON	OFF/ON SELECTOR SWITCH
A B C ✳ (XOO) (OOX)	3 POSITION SELECTOR SWITCH, MAINTAINED CONTACT O-OPEN X-CLOSED

POSITION	TOP CONTACT	MIDDLE CONTACT	BOTTOM CONTACT
A	X	O	O
B	O	O	O
C	O	O	X

✳ NAMEPLATE (A/B/C)
HOA- HAND/OFF/AUTO
HOR- HAND/OFF/REMOTE
LOR- LOCAL/OFF/REMOTE
RSL- RAISE/STOP/LOWER
TOA- TEST/OFF/AUTO

NOTE: 2 POSITION MULTI-CONTACT SWITCH FOLLOWS SAME CONVENTION

M #	MOTOR STARTER COIL, NUMBER AS INDICATED
CR #	CONTROL RELAY COIL, NUMBER AS INDICATED
	RVSS: REDUCED VOLTAGE STATIC SOLID SOFT STARTER

SYMBOLS	DESCRIPTION
*	PILOT LIGHT, COLOR AS NOTED ✳ R- RED G- GREEN B- BLUE W- WHITE A- AMBER
* PTT	PILOT LIGHT, PUSH-TO-TEST TYPE, COLOR AS NOTED ABOVE.
TD	TIME DELAY RELAY RANGE AS NOTED SET POINT AS NOTED TDD-TIME DELAY AFTER DE-ENERGIZATION-OFF DELAY TDE-TIME DELAY AFTER ENERGIZATION-ON DELAY
	NOTC-NORMALLY OPEN, TIMED CLOSING WHEN ENERGIZED NCTO-NORMALLY CLOSED, TIMED OPENING WHEN ENERGIZED NOTO-NORMALLY OPEN, TIMED OPENING WHEN DE-ENERGIZED NCTC-NORMALLY CLOSED, TIMED CLOSING WHEN DE-ENERGIZED
⊗	FIELD INSTRUMENT, TAG NO. OR LOOP # AS INDICATED ✳INDICATES INSTRUMENT TYPE DEFINED ON LOOP SHEETS ## - INDICATES LOOP NO.
OR ⊗	LIQUID LEVEL (FLOAT) SWITCH NORMALLY OPEN, CLOSES ON RISING LEVEL NORMALLY CLOSED, OPENS ON RISING LEVEL NORMALLY OPEN, CLOSES ON DROPPING LEVEL NORMALLY CLOSED, OPENS ON DROPPING LEVEL
OR ⊗	PRESSURE OR VACUUM SWITCH NORMALLY OPEN, CLOSES ON RISING PRESSURE NORMALLY CLOSED, OPENS ON RISING PRESSURE NORMALLY OPEN, CLOSES ON DROPPING PRESSURE NORMALLY CLOSED, OPENS ON DROPPING PRESSURE
OR ⊗	TEMPERATURE SWITCH OR THERMOSTAT NORMALLY OPEN, CLOSES ON RISING TEMPERATURE NORMALLY CLOSED, OPENS ON RISING TEMPERATURE NORMALLY OPEN, CLOSES ON DROPPING TEMPERATURE NORMALLY CLOSED, OPENS ON DROPPING TEMPERATURE
OR ⊗	FLOW SWITCH (AIR, WATER, ETC.) NORMALLY OPEN, CLOSES ON INCREASED FLOW NORMALLY OPEN, CLOSES ON DROPPING FLOW NORMALLY CLOSED, OPENS ON INCREASED FLOW NORMALLY CLOSED, OPENS ON DROPPING FLOW
OR ⊗	POSITION (LIMIT) SWITCH NORMALLY OPEN NORMALLY OPEN - HELD CLOSED NORMALLY CLOSED NORMALLY CLOSED - HELD OPEN
OR ⊗	TORQUE SWITCH NORMALLY CLOSED, OPENS ON HIGH TORQUE
	CONDUCTORS OR CONDUITS CROSSING PATHS BUT NOT CONNECTED
	CONDUCTORS ELECTRICALLY CONNECTED
FAN	SUPPLY/EXHAUST FAN

SYMBOLS	DESCRIPTION
LA SC	LIGHTNING ARRESTER/SURGE CAPACITOR
OR	GROUND ROD GROUND ROD WELL
30A	FUSE, AMPERE RATING AS NOTED
OR HTR	HEATER
	INDUCTOR
TG	TACHOMETER GENERATOR
	CONTACT, NORMALLY OPEN (NO)
	CONTACT, NORMALLY CLOSED (NC)
	OVERLOAD RELAY HEATER
K	KEY INTERLOCK
TB	TERMINAL OR TEST BLOCK
RTD	RESISTANCE TEMPERATURE DETECTOR
VE	VIBRATION DETECTOR
DM	DAMPER MOTOR
ETM OR	ELAPSED TIME METER
MOV	MOTOR OPERATED VALVE
	PUSH BUTTON STATION, REFER TO ELECTRICAL SCHEMATIC FOR NUMBER OF DEVICES.
J	JUNCTION BOX
JP	POWER JUNCTION BOX
JI	4-20mA SIGNAL JUNCTION BOX
JC	CONTROL JUNCTION BOX
PB	PULL BOX
TC	TERMINATION CABINET
	REMOTE DEVICES
5	MOV WITHOUT INTEGRATED DISCONNECT
5	MOV WITH INTEGRATED DISCONNECT
	INDICATES LIMITS OF EQUIPMENT OR WIRING ENCLOSURE
MPR	(MPR) MOTOR PROTECTION RELAY

NO.	DATE	REVISION	APP.

HATCH
750 TOWN & COUNTRY BLVD
SUITE 650
HOUSTON, TX 77024
P: 832-930-7670
TX FIRM NUMBER: F-314

SURVEYED BY:
AMANI ENGINEERING, INC.
FB NO. P-6357

STATE OF TEXAS
GUY N SEVERN
105809
LICENSED
PROFESSIONAL ENGINEER
7/21/2026

CITY OF HOUSTON
HOUSTON PUBLIC WORKS

LIFT STATION RENEWAL & REPLACEMENT PROJECT
ELECTRICAL LEGENDS & SYMBOLS-I

WBS NUMBER	R-000267-0173-4
DRAWING SCALE	NTS
CITY OF HOUSTON PM	NUPUR KRISHNAN P.E. N.K.
SHEET NO.	261 OF 274

FOR CITY OF HOUSTON USE ONLY

HOUSTON PUBLIC WORKS
ACCEPTED AND FILED
82825
CITY DRAWING NUMBER
Approval Date 08/14/26
HOUSTON TX

Z0E120

PLOTTED: 8/11/2026 1:29 PM
PLOT STYLE: COH.ctb
FILE PATH: \\wuspplot01\d$\Global ProjectWise Plotting - WUS\Queue 3\queue3.dwg

SYMBOLS	DESCRIPTION
A LA-3 b	REFER TO LIGHT FIXTURE SCHEDULE FOR TYPE FIXTURE: "A"- FIXTURE TYPE "b"- CONTROLLED BY SWITCH "b" "LA-3"- CIRCUIT 3 FROM PANEL LA
A b LA-3	REFER TO LIGHT FIXTURE SCHEDULE FOR TYPE FIXTURE, NOTATIONS SAME AS ABOVE
A LA-3 OR A LA-3 NS	INDICATES LIGHT FIXTURES WHICH ARE NONSWITCHED, NOTATIONS SAME AS ABOVE "NS" - NONSWITCHED
A LA-3 b	WALL MOUNTED LIGHTING FIXTURE, NOTATIONS SAME AS ABOVE
A LA-3 b	POLE MOUNTED LIGHTING FIXTURE, NOTATIONS SAME AS ABOVE
A LA-3	EMERGENCY LIGHTING BATTERY UNIT WITH TWO LAMP HEADS, NOTATIONS SAME AS ABOVE
A	REMOTE EMERGENCY ADJUSTABLE WALL LIGHTING FIXTURE WITH TWO LAMP HEADS, NOTATIONS SAME AS ABOVE
A LA-3	CEILING MOUNTED EXIT SIGN, NOTATIONS SAME AS ABOVE
A LA-3	WALL OUTLET EXIT SIGN. ARROW INDICATES DIRECTION OF EGRESS, NOTATIONS SAME AS ABOVE
	CONDUIT, EXPOSED/SURFACE MOUNTED
	CONDUIT OR DUCTBANK, CONCEALED
	CONDUIT, EXPOSED/SURFACE MOUNTED, TURNING UP
	CONDUIT, EXPOSED/SURFACE MOUNTED, TURNING DOWN
	CONDUIT STUBBED OUT AND CAPPED
2(3#3/0+1#2G, 3"C)	DENOTES A QUANTITY OF 2 SETS OF THREE (3) NO.3/0 AWG CONDUCTORS AND 1 NO.AWG GROUND CONDUCTOR EACH INSTALLED IN 3" CONDUIT.
2(2/C#16TS)	DENOTES A QUANTITY OF TWO INSTRUMENT CABLES. EACH CONSISTS OF TWO NO.16 AWG CONDUCTORS TWISTED TOGETHER AND COVERED WITH A METALLIC SHIELD AND AN OVERALL PROTECTIVE JACKET. REFER TO THE SPECIFICATIONS FOR THE EXACT CABLE TO BE PROVIDED.
3(4"C)	DENOTES A QUANTITY OF THREE 4-INCH CONDUITS.
	FLEXIBLE METAL CONDUIT "WHIP" (2#12, #12G, 3/4"C UNLESS OTHERWISE NOTED) FOR RECESSED LIGHTING FIXTURES AND LIQUID TIGHT MOTOR CONNECTIONS
LP#-1,3	HOMERUN, CIRCUITS 1 AND 3 RUN TO PANEL LP-1
$b	SINGLE POLE SWITCH "b"- INDICATES SWITCH LEG SHALL CONTROL LIGHT FIXTURES WITH "b" DESIGNATION
$b^x	MULTI POLE SWITCH "x"- INDICATES NUMBER OF POLE "b"- NOTATIONS SAME AS ABOVE
$b^P	SINGLE POLE SWITCH AND PILOT LIGHT, "b"- NOTATIONS SAME AS ABOVE
$b^D	DIMMER LIGHTING CONTROL SWITCH, "b"- NOTATIONS SAME AS ABOVE
$b^TM	TIME SWITCH, "b"-NOTATIONS SAME AS ABOVE
$^M	MANUAL MOTOR STARTER /DISCONNECT
$^OS	SINGLE POLE SWITCH WITH OCCUPANCY SENSOR
$^DM	SINGLE POLE DIMMER SWITCH
$b^x xx	SWITCH ENCLOSURE "x"- NOTATIONS SAME AS ABOVE "b"- NOTATIONS SAME AS ABOVE "xx"- INDICATES ENCLOSURE TYPE
LC-1	LIGHTING CONTACTOR WITH NUMBER OF POLES AS INDICATED

SYMBOLS	DESCRIPTION
L*-## OR L*-##	LIGHTING PANELBOARD (TYPICAL 120V/240V OR 120V/208V)
H*-## OR H*-##	DISTRIBUTION PANELBOARD (TYPICAL 277V/480V)
LA-3	DUPLEX RECEPTACLE, 20A, 120V, 2P, 3W GFI- GROUND FAULT INTERRUPTER TYPE WP- WEATHERPROOF "LA-3"- CIRCUIT 3 FROM PANEL LA
	WELDING RECEPTACLE
	20A, 240V, 2P, 3W, RECEPTACLE
	CLASS 1, DIVISION 1, RATED TWIST LOCK RECEPTACLE, VOLTAGE AND AMPERAGE RATING AS NOTED
	SINGLE FACE, SINGLE GANG PEDESTAL WITH 20A, 120V, 2P, 3W DUPLEX RECEPTACLE, FURNISHED AND INSTALLED UNDER DIVISION 16 UNLESS OTHERWISE NOTED. * DENOTES FURNISHED UNDER OTHER DIVISIONS OF THE SPECIFICATIONS BUT INSTALLED UNDER DIVISION 16
D	DOUBLE FACE, SINGLE GANG PEDESTAL WITH 20A, 120V, 2P, 3W DUPLEX RECEPTACLE AND 20A, 240V, 2P, 3W SINGLE RECEPTACLE, FURNISHED AND INSTALLED UNDER DIVISION 16 UNLESS OTHERWISE NOTED. * DENOTES FURNISHED UNDER OTHER DIVISIONS OF THE SPECIFICATIONS BUT INSTALLED UNDER DIVISION 16
	DOUBLE RECEPTACLE, 20A, 120V, 2P, 3W MOUNTED IN BOX CURB FURNISHED UNDER OTHER DIVISIONS OF THE SPECIFICATIONS BUT INSTALLED UNDER DIVISION 16
	SINGLE GANG 20A, 120V, 3P, 3W RECEPTACLE
	QUAD RECEPTACLE
OS	OCCUPANCY SENSOR CAPABLE OF VACANCY
PC	PHOTOCELL

TAGGING		
EQUIPMENT	EQUIPMENT TAG	CONDUIT TAG
MOTOR CONTROL CENTER	MCC-1	MC1-XX
SWITCHBOARD	SWBD-1	SB1-XX
SWITCHGEAR	SWGR-1	SG1-XX
PROGRAMMABLE LOGIC CABINET	PLC-1	PL1-XX
VARIABLE FREQUENCY DRIVE	VFD-1	VF1-P
LOW VOLTAGE TRANSFORMER	TX-LX OR TX-HX	TXLX-P OR TXHX-P
SERVICE TRANSFORMER	TX-1	TX1-P
GENERATOR	GEN-1	GN1-X
LIGHTING/POWER PANELBOARD	LP/PP-XX	XX-XX
AUTOMATIC TRANSFER SWITCH	ATS-1	AT1-XX
TYPICAL TAG FOR CONDUIT FROM THIS EQUIPMENT TO DOWN STREAM LOAD FOR EXAMPLE.		

SYMBOLS	DESCRIPTION
COMMUNICATIONS SYSTEMS	
	TELEPHONE OUTLET
	DATA OUTLET
P	DATA INPUT/OUTPUT CABLE OUTLET. "P" DENOTES PROCESS COMPUTER SYSTEM
	VOICE/DATA OUTLET
S	PAGING SPEAKER HORN
S	PAGING SPEAKER BI-DIRECTIONAL
S	PAGING SPEAKER, CEILING MOUNTED TYPE
S	PAGING SPEAKER, WALL MOUNTED TYPE
SECURITY SYSTEMS	
SAP	SECURITY ALARM PANEL
DS	SECURITY ALARM DOOR SWITCH
KP	SECURITY ALARM KEY PAD
CR	SECURITY SYSTEM CARD ACCESS READER
WS	SECURITY ALARM WINDOW SWITCH
MD	SECURITY ALARM MOTION DETECTOR
	SECURITY CAMERA CCTV- CLOSED CIRCUIT TV CAMERA PTZ- PAN, TILT, ZOOM CAMERA LENS CONTROLS
GB	GLASS BREAK DETECTOR
ACP	ACCESS CONTROL PANEL
FIRE ALARM SYSTEMS	
FACP	FIRE ALARM CONTROL PANEL
SD	SMOKE DETECTOR : D- DENOTES DUCT SMOKE DETECTOR R- DENOTES FIXED TEMPERATURE RATE-OF-RISE TYPE.
F	FIRE ALARM MANUAL PULL STATION, MOUNT AT 4'-0"
	ALARM HORN, MOUNT AT 7'-6" : F- DENOTES FIRE ALARM
	ALARM STROBE, MOUNT AT 6'-8" : F- DENOTES FIRE ALARM
	ALARM HORN AND STROBE LIGHT COMBINATION, MOUNT AT 6'-8" : F- DENOTES FIRE ALARM

EXAMPLE LEGEND:

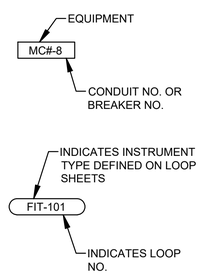

ABBREVIATIONS	
AC	ALTERNATING CURRENT
AFD	ADJUSTABLE FREQUENCY DRIVE
AFF	ABOVE FINISHED FLOOR
AG	ABOVE GRADE
ALUM	ALUMINUM
AMP/A	AMPERE
ATS	AUTOMATIC TRANSFER SWITCH
AUTO	AUTOMATIC
AUX	AUXILIARY
AWG	AMERICAN WIRE GAUGE
C	CONDUIT
CB	CIRCUIT BREAKER
CKT	CIRCUIT
CLF	CURRENT LIMITING FUSE
CP	CONTROL PANEL
CPT	CONTROL POWER TRANSFORMER
CR	CONTROL RELAY
CS	CONTROL SWITCH
CT	CURRENT TRANSFORMER
CU	COPPER
DC	DIRECT CURRENT
DI	DOOR INTERLOCK
DN	DOWN
DWG	DRAWING
EHH	ELECTRICAL HANDHOLE
EC	EMPTY CONDUIT
ELEC	ELECTRICAL
ELEV	ELEVATION
EM	EMERGENCY
EMH	ELECTRICAL MANHOLE
EO	ELECTRICALLY OPERATED
ERMS	ENERGY-REDUCING MAINTENANCE SWITCH
FBO	FURNISHED BY OTHERS
FO	FIBER OPTIC
FRP	FIBERGLASS REINFORCED POLYESTER
FU	FUSE
GCP	GENERATOR CONTROL PANEL
GEN	GENERATOR
G, GRD	GROUND
GFI	GROUND FAULT INTERRUPTER
GFCI	GROUND FAULT CIRCUIT INTERRUPTER
GO	GATE OPERATOR
GRS	GALVANIZED RIGID STEEL
HH	HANDHOLE
HT	HEIGHT
HTP	HEAT TRACE PANEL
HZ	HERTZ
IMH	INSTRUMENT MAN HOLE
INST	INSTRUMENT
LA	LIGHTNING ARRESTER
LC	LIGHTNING CONTACTOR
LCP	LOCAL CONTROL PANEL
LGTS	LIGHTS
LP	LIGHTING PANEL
	CONTINUED ABOVE RIGHT

	CONTINUED BELOW LEFT
LSIG	LONG TIME/SHORT TIME/ INSTANTANEOUS/GROUND FAULT FEATURE INCLUDED
MCC	MOTOR CONTROL CENTER
MCP	MOTOR CIRCUIT PROTECTOR
MFR	MANUFACTURER
MH	MANHOLE
MLO	MAIN LUGS ONLY
MLO	MAIN LUGS ONLY
MOR	MOTOR OVERLOAD RELAY
MTD	MOUNTED
MTS	MANUAL TRANSFER SWITCH
NC	NORMALLY CLOSED
NO	NORMALLY OPEN OR NUMBER
NTS	NOT TO SCALE
OL	OVERLOAD
OLX	OVERLOAD CONTROL RELAY
PB	PUSH BUTTON OR PULL BOX
PCC	PUMP CONTROL CONSOLE
PPR	PHASE PROTECTIVE RELAY
PFR	PHASE FAILURE RELAY
PH	PHASE
PNLBD	PANELBOARD
PR	PAIR
PT	POTENTIAL TRANSFORMER
PTT	PUSH TO TEST TYPE
PVC	POLYVINYL CHLORIDE
QTY	QUANTITY
RCP	RELAY CONTROL PANEL
RECP	RECEPTACLES
RVSS	REDUCED VOLTAGE SOFT STARTER
SC	SURGE CAPACITOR
SCH	SCHEMATIC
SCCR	SHORT CIRCUIT CURRENT RATING
SEC	SECONDS OR SECONDARY
SH	SHIELDED OR SHEET
SHT	SHEET
SM	MOTOR RATED SWITCH
SN	SOLID NEUTRAL
SS	STAINLESS STEEL
ST	STARTER
SV	SOLENOID VALVE
SW	SWITCH
SWBD	SWITCHBOARD
SWGR	SWITCHGEAR
TC	TERMINATION CABINET
TEL	TELEPHONE
TO	TIME DELAY ON OPENING
TS	TEMPERATURE SWITCH
TVSS	TRANSIENT VOLTAGE SURGE SUPPRESSOR
TSW	TWISTED SHIELDED WIRE
TYP	TYPICAL
UG	UNDERGROUND
V	VOLTS
VFD	VARIABLE FREQUENCY DRIVE
VO	VALVE OPERATOR
W	WIRE
WP	WEATHERPROOF
XP	EXPLOSION PROOF
XFMR	TRANSFORMER

NO.	DATE	REVISION	APP.

HATCH
750 TOWN & COUNTRY BLVD
SUITE 650
HOUSTON, TX 77024
P: 832-930-7670
TX FIRM NUMBER: F-314

SURVEYED BY:
AMANI ENGINEERING, INC.
FB NO. P-6357

STATE OF TEXAS
GUY N SEVERN
105809
LICENSED
PROFESSIONAL ENGINEER
7/21/2026

CITY OF HOUSTON
HOUSTON PUBLIC WORKS

LIFT STATION RENEWAL & REPLACEMENT PROJECT
ELECTRICAL LEGENDS & SYMBOLS-II

WBS NUMBER	FOR CITY OF HOUSTON USE ONLY
R-000267-0173-4	HOUSTON PUBLIC WORKS ACCEPTED AND FILED 82825 CITY DRAWING NUMBER Approval Date 08/14/26 HOUSTON TX
DRAWING SCALE	
NTS	
CITY OF HOUSTON PM	
NUPUR KRISHNAN P.E. N.K.	
Z0E121	SHEET NO. 262 OF 274

PLOTTED: 8/11/2026 1:25 PM
PLOT STYLE: COH.ctb
FILE PATH: \\wuspplo101\d$\Global ProjectWise Plotting - WUS\Queue 4\queue4.dwg

PRIMARY FLOW ELEMENTS

	MAGNETIC FLOW METER
	ULTRASONIC DOPPLER FLOW METER
	ULTRASONIC TIME TRANSIT FLOW METER
	VORTEX FLOW METER
	VENTURI TUBE
	TURBINE OR PROPELLER TYPE METER
	ROTAMETER
	PITOT TUBE
	WEIR FLOW METER
	PARSHALL FLUME OR TRAPEZOIDAL FLUME
	ORIFICE PLATE
	THERMAL MASS FLOWMETER

PRIMARY LEVEL ELEMENTS

	ULTRASONIC LEVEL TRANSDUCER
	RADAR LEVEL TRANSDUCER
	PRIMARY ELEMENT PRESSURE PROBE LEVEL TRANSMITTER
	BUBBLER LEVEL TUBE ELEMENT
	CONDUCTIVE LEVEL PROBE
	FLOAT SWITCH

VALVES

	VALVE - OTHER IN-LINE TYPE NOT OTHERWISE IDENTIFIED
	THREE-WAY VALVE
	BALL VALVE
	GLOBE VALVE
	PINCH VALVE
	GATE VALVE
	NEEDLE VALVE
	DIAPHRAGM VALVE
	BUTTERFLY VALVE
	CHECK VALVE WITH FLOW DIRECTION
	PLUG VALVE
	PRESSURE-REDUCING REGULATOR INTERNAL PRESSURE TAP
	BACK PRESSURE REGULATOR INTERNAL PRESSURE TAP
	PRESSURE-REDUCING REGULATOR EXTERNAL PRESSURE TAP
	BACK PRESSURE REGULATOR EXTERNAL PRESSURE TAP

VALVES

S	SOLENOID ACTUATED VALVE
	"X" / P AIR CYLINDER / O OIL CYLINDER / H HYDRAULIC CYLINDER / E ELECTRIC MOTOR / S SOLENOID VALVE
OR NO SYMBOL	MANUAL VALVE

MISC PROCESS SYMBOLS

	ANNULAR TYPE SEAL
	CHEMICAL INJECTION POINT
	STRAINER
	DRAIN
	NORMAL OPERATING LEVEL
UV	UV CHAMBER
	FLOW STRAIGHTENER
	LOAD CELL
	SPRAY NOZZLE
	BLIND FLANGE
	FLANGE
	DIAPHRAGM SEAL
	PRESSURE RELIEF (OUT)
	VACUUM RELIEF (IN)

GATES

	SLUICE/SLIDE GATE
	FLOW CONTROL GATE

MOTORS

M	VARIABLE SPEED MOTOR
M	CONSTANT SPEED MOTOR

PUMPS, BLOWERS AND MISC EQUIPMENT

	CENTRIFUGAL BLOWER
	CENTRIFUGAL PUMP
	DIAPHRAGM PUMP AND MOTOR
	PROGRESSIVE CAVITY PUMP
	SUBMERSIBLE PUMP
	POSITIVE DISPLACEMENT BLOWER

PUMPS, BLOWERS AND MISC EQUIPMENT

	MIXER/FLOCCULATOR/AERATOR
	VERTICAL PUMP-1 USED WHEN DISCHARGE LINE IS IN WETWELL
	VERTICAL PUMP-2 USED WHEN DISCHARGE LINE IS EXPOSED.
	VERTICAL PUMP SHAFT USED WHEN INTAKE OF PUMP IS ENCASED.
	SUBMERSIBLE MIXER
	COMPRESSOR
	HEAT EXCHANGER
	FEED PUMP
	GRINDER/MACERATOR
	METERING PUMP
	PLUNGER PUMP
	PERISTALTIC METERING PUMP
	CENTRIFUGE
	PULSATION DAMPENER
	TURBO BLOWER

PUMPS, BLOWERS AND MISC EQUIPMENT

	ROTARY SCREEN

CONTROL ENCLOSURE, INSTRUMENTS AND SCADA

XXX / P AAA YY / BBB / CCC D / ZZZ	DIGITAL/ANALOG INSTRUMENT AAA ISA TAG (REFER TO TABLE) BBB LOOP NUMBER CCC LOOP NUMBER SUB D DIVISION NUMBER P POWER REQUIREMENT XXX DESCRIPTION (USED ON PANEL INSTRUMENTS) YY CHEMICAL ZZZ LOCATION DIGITAL/ANALOG INSTRUMENT -LOCATED IN THE FIELD -NOT INSIDE OF PANEL -VISIBLE AT FIELD LOCATION -NORMALLY OPERATOR ACCESSIBLE
XXX / P AAA YY / BBB / CCC D / ZZZ	DIGITAL/ANALOG INSTRUMENT -LOCATED ON PANEL -VISIBLE TO OPERATOR -NORMALLY OPERATOR ACCESSIBLE
XXX / P AAA YY / BBB / CCC D / ZZZ	DIGITAL/ANALOG INSTRUMENT -LOCATED INSIDE PANEL -NOT VISIBLE TO OPERATOR -NORMALLY NOT ACCESSIBLE
XXX / AAA / BBB / CCC	DISPLAY (INDICATION/CONTROLLER) AAA ISA TAG (REFER TO TABLE) BBB LOOP NUMBER CCC LOOP NUMBER SUB XXX DESCRIPTION DISPLAY (INDICATION/CONTROLLER) -LOCATED IN THE FIELD -NOT INSIDE OF PANEL -VISIBLE AT FIELD LOCATION -NORMALLY OPERATOR ACCESSIBLE
XXX / AAA / BBB / CCC	DISPLAY (INDICATION/CONTROLLER) -LOCATED ON PANEL -VISIBLE TO OPERATOR -NORMALLY OPERATOR ACCESSIBLE
XXX / AAA / BBB / CCC	DISPLAY (INDICATION/CONTROLLER) -LOCATED INSIDE PANEL -NOT VISIBLE TO OPERATOR -NORMALLY NOT ACCESSIBLE
-	INTERLOCKING RELAY

CONTROL ENCLOSURE AND SCADA

	DIGITAL INPUT
	DIGITAL OUTPUT
	ANALOG INPUT
	ANALOG OUTPUT
	SURGE SUPPRESSOR
	OPTO ISOLATOR
* / *	SIGNAL CONVERTER/ ISOLATOR */* - (INPUT/OUTPUT) * DEFINED AS FOLLOWS: E - VOLTAGE I - CURRENT P - PNEUMATIC PD - PULSE DURATION H - HYDRAULIC O - ELECTROMAGNETIC, SONIC R - RESISTANCE (ELECTRIC)

CONTROL ENCLOSURE, INSTRUMENTS AND SCADA

PLC/RTU LOGIC

FUNCTION SYMBOLS AND ABBREVIATIONS

F(X)

K	PROPORTIONAL GAIN OR ATTENUATE (INPUT:OUTPUT)
- K	REVERSE PROPORTIONAL GAIN OR ATTENUATE (INPUT:OUTPUT)
Σ	SUMMING
Σ/n	AVERAGING
Δ	SUBTRACTING
√‾	EXTRACT SQUARE ROOT
÷	DIVIDE
X	MULTIPLY
S	INTEGRATE
+	BIAS POSITIVE
-	BIAS NEGATIVE
F (x)	NONLINEAR OR UNSPECIFIED FUNCTION
>	HIGH SELECT
<	LOW SELECT
▷	HIGH LIMIT
|	LOW LIMIT

INSTRUMENT (COMMON HOUSING)	INSTRUMENT (SEPARATOR HOUSING)	INSTRUMENT (PART OF MAJOR MAJOR EQUIPMENT)

HAND SWITCH ABBREVIATIONS:

HOA	HAND/OFF/AUTO
HOR	HAND/OFF/REMOTE
LOC	LOCAL/OFF/COMPUTER
LOR	LOCAL/OFF/REMOTE
LOS	LOCKOUT STOP
OSC	OPEN/STOP/CLOSE
RSL	RAISE/STOP/LOWER
L/C	LOCAL/COMPUTER
L/R	LOCAL/REMOTE
O/C	OPEN/CLOSE
S/S	START/STOP
A/M	AUTO/MANUAL
H/C	HAND/COMPUTER
PB	PUSHBUTTON

GENERAL NOTES:

1. THIS IS A GENERAL LEGEND SHEET, SOME SYMBOLS AND ABBREVIATIONS MAY NOT APPLY TO THIS SPECIFIC PROJECT.
2. THIS LEGEND APPLIES TO INSTRUMENTATION DIAGRAMS ONLY AND MAY DIFFER FROM LEGENDS FOR OTHER SHEETS.
3. IN GENERAL THIS LEGEND SHEET AND THE INSTRUMENTATION DIAGRAMS ARE BASED ON INTERNATIONAL SOCIETY OF AUTOMATION, STANDARDS FOR PRACTICES FOR INSTRUMENTATION, STANDARD S5.1 SOME MODIFICATIONS, ADDITIONS AND ALTERATIONS HAVE BEEN MADE AS REQUIRED TO ACCOMMODATE THE PROJECT REQUIREMENTS.
4. SOME PROCESS ITEMS, SUCH AS EQUIPMENT ISOLATION VALVES, BYPASS LINES, ETC., WHICH ARE NOT CRITICAL FOR AN UNDERSTANDING OF THE INSTRUMENTATION AND CONTROL FUNCTIONS ARE NOT SHOWN ON THE INSTRUMENTATION SHEETS.
5. SEE ELECTRICAL SHEETS AND SPECIFICATIONS FOR ADDITIONAL CONTROL AND INTERLOCK REQUIREMENTS FOR EQUIPMENT NOT SHOWN OR NOT PROVIDED BY THE INSTRUMENTATION SUPPLIER.
6. IN THE EVENT OF DISCREPANCY BETWEEN THE PROCESS & INSTRUMENTATION DIAGRAMS AND THE LOOP DIAGRAMS, THE INFORMATION FROM THE LOOP DIAGRAMS SHALL BE USED.

NO.	DATE	REVISION	APP.

HATCH
750 TOWN & COUNTRY BLVD
SUITE 650
HOUSTON, TX 77024
P: 832-930-7670
TX FIRM NUMBER: F-314

SURVEYED BY:
AMANI ENGINEERING, INC.
FB NO. P-6357

STATE OF TEXAS
GUY N SEVERN
105809
LICENSED
PROFESSIONAL ENGINEER
7/21/2026

CITY OF HOUSTON

HOUSTON PUBLIC WORKS

LIFT STATION RENEWAL & REPLACEMENT PROJECT

INSTRUMENTATION LEGENDS & SYMBOLS-I

WBS NUMBER	R-000267-0173-4
DRAWING SCALE	NTS
CITY OF HOUSTON PM	NUPUR KRISHNAN P.E. N.K.

FOR CITY OF HOUSTON USE ONLY

HOUSTON PUBLIC WORKS
ACCEPTED AND FILED
82825
CITY DRAWING NUMBER
Approval Date 08/14/26
HOUSTON TX

Z0E122

SHEET NO. 263 OF 274

PLOTTED: 8/11/2026 1:25 PM

PLOT STYLE: COH.ctb

FILE PATH: \\wusppplot01\d$\Global ProjectWise Plotting - WUS\Queue 3\queue3.dwg

LINE SYMBOLS

	MAJOR PROCESS LINE
	MINOR PROCESS LINE
	FUTURE PROCESS LINE
	EXISTING PROCESS LINE
	HARDWIRED SIGNAL
	SOFT LINK
— L — L —	HYDRAULIC LINK
— // — // —	PNEUMATIC LINK
— x — x —	CAPILLARY TUBE OR FILLED SYSTEM SIGNAL
	ELECTROMAGNET OR SONIC SIGNAL (GUIDED)
DESCRIPTION X SHEET# Y	(USED WHEN REFERRING TO A SHEET IN THE DESIGN SET) DESCRIPTION - WHERE FLOW IS GOING SHEET# - WHAT SHEET PROCESS CONTINUES ON X - USED WHEN TWO OR MORE ARROWS ARE REFERING TO THE SAME SHEET. Y - USED WHEN TWO OR MORE ARROWS ARE REFERRING TO THE SAME SHEET.
DESCRIPTION	(USED WHEN REFERRING TO A SHEET NOT IN THE DESIGN SET) DESCRIPTION - WHERE FLOW IS GOING
CAT5e — CAT5e	CAT-5e ETHERNET CABLE
CAT6 — CAT6	CAT-6 ETHERNET CABLE
— . — . —	MODBUS PLUS CABLE
— _ —	RS-485 CABLE
RS-232 — RS-232	RS-232 CABLE
POE — POE	POWER OVER ETHERNET CABLE
T1 — T1	T1 FIBER CONNECTION
FO — FO	NON-SPECIFIC FIBER OPTIC CABLE
100 — 100	FIBER 100BASE-FX
1000 — 1000	FIBER 1000BASE-FX
	SIGNAL CROSSING
	PROCESS LINE CROSSING
	PROCESS LINE/ HARDWIRE SIGNAL CROSSING

EQUIPMENT/LOOP TAGGING

X	EQUIPMENT TAG USED TO IDENTIFY NON-INSTRUMENT EQUIPMENT
X	LOOP TAG USED TO TIE THE PROCESS FLOW DIAGRAM TO A LOOP DIAGRAM

STANDARD VALVE AND PIPING USAGE

PDIT 1	BLOCK/BLEED VALVE ARRANGEMENT
PI 1	INSTRUMENTS WITH VALVE ONLY
PI 1	INSTRUMENTS WITH DIAPHRAGM SEAL
PI 1	INSTRUMENTS WITH ANNULAR SEAL

PANEL DETAIL SYMBOLS

RUN (R)	INDICATING LIGHT -R RED (ACTIVE EQUIPMENT) -G GREEN (EQUIPMENT OFF) -W WHITE (POWER) -B BLUE (CONDITION IE BACKWASH IN PROGRESS) -A AMBER (ALARM CONDITION)
H/O/A (H)	SWITCH -L/R (LOCAL - REMOTE) -L/O/A (LOCAL - OFF - AUTO) -L/O/R (LOCAL - OFF - REMOTE) -H/O/A (HAND - OFF - AUTO) -H/O/R (HAND - OFF - REMOTE)
START (S)	PUSHBUTTON
	HORN
	BEACON
OIT	OPERATOR INTERFACE TERMINAL

SECURITY SYSTEM SYMBOLS

CCTV	CLOSED CIRCUIT TELEVISION CAMERA
PTZ	PAN, TILT, ZOOM CAMERA

GENERAL ABBREVIATIONS

AI	ANALOG INPUT
AL	ALARM PILOT LIGHT
AO	ANALOG OUTPUT
AS	AIR SUPPLY
ASP	APPLICATION SERVICE PROVIDER
BFV	BUTTERFLY VALVE
CCTV	CLOSED CIRCUIT TELEVISION
CH4	METHANE
CL2	CHLORINE
COND	CONDUCTIVITY
COMP	COMPUTER
CP	CONTROL PANEL
CPU	CENTRAL PROCESSING UNIT
CRC	CONTROL ROOM CONSOLE
CTU	CENTRAL TELEMETRY UNIT
DCU	DISTRIBUTED CONTROL UNIT
DI	DIGITAL OR DISCRETE INPUT
DO	DISSOLVED OXYGEN OR DIGITAL OUTPUT
DPU	DISTRIBUTED PROCESSING UNIT
EPP	ETHERNET PATCH PANEL
ES	EMERGENCY STOP
ESW	ETHERNET SWITCH
ETM	ELAPSED TIME METER
FC	FAIL CLOSED
FCP	FIELD CONTROL PANEL
FCS	FILTER CONTROL STATION
FCV	FLOW CONTROL VALVE
FLP	FAIL LAST POSITION
FO	FAIL OPEN
FOPP	FIBER OPTIC PATCH PANEL
FPR	FEEDER PROTECTION RELAY
H2S	HYDROGEN SULFIDE
HMI	HUMAN MACHINE INTERFACE
JB	JUNCTION BOX
IO	INPUT/OUTPUT
IR	INFARED
LAS	LIQUID AMMONIA SULFATE
LCP	LOCAL CONTROL PANEL
LCS	LOCAL CONTROL STATION
LT	LEVEL TRANSMITTER
LPU	LOCAL PROCESSING UNIT
LTS	LOCAL TERMINAL SYSTEM
MC	MOTOR CONTROLLER
NAOCL	SODIUM HYPOCHLORIDE
NC	NORMALLY CLOSED
NH3	AMMONIA
NIM	NETWORK INTERFACE MODULE
NO	NORMALLY OPEN
MCC	MOTOR CONTROL CENTER
MM	MULTI MODE FIBER OPTIC CABLE
MPR	MOTOR PROTECTION RELAY
OIT	OPERATIONS INTERFACE TERMINAL
OL	OVERLOAD
OWS	OPERATOR WORKSTATION
PB	PUSH BUTTON
PCSI	PROCESS CONTROL SYSTEM INTEGRATOR
pH	HYDROGEN ION
PLC	PROGRAMMABLE LOGIC CONTROLLER
PMCS	PROCESS MONITORING CONTROL SYSTEM
POLY	POLYMER
PQM	POWER QUALITY METER
PS	POWER SUPPLY
PSU	POWER SUPPLY UNIT
PV	PINCH VALVE
RBC	REMOTE BASE CONTROLLER
RIO	REMOTE INPUT OUTPUT
RTU	REMOTE TERMINAL UNIT
SCADA	SUPERVISORY CONTROL AND DATA AQUISITION
SM	SINGLE MODE FIBER OPTIC CABLE
SO2	SULFUR DIOXIDE
SOL	SOLENOID
SPD	SURGE PROTECTION DEVICE
UPS	UNINTERRUPTIBLE POWER SUPPLY
TC	TERMINATION CABINET
TURB	TURBIDITY
VIB	VIBRATION
VFD	VARIABLE FREQUENCY DRIVE
VLV	VALVE

MEANINGS OF IDENTIFICATION LETTERS

THIS TABLE APPLIES ONLY TO THE FUNCTIONAL IDENTIFICATION OF INSTRUMENTS.

	FIRST LETTER		SUCCEEDING LETTERS		
	MEASURED OR INITIATING VARIABLE	MODIFIER	READOUT OR PASSIVE FUNCTION	OUTPUT FUNCTION	MODIFIER
A	ANALYSIS/ANALYTICAL		ALARM		
B	BURNER, COMBUSTION			CLOSE, STOP, DECREASE (1)	
C	CONDUCTIVITY			CONTROL	
D	DENSITY (MASS) OR SPECIFIC GRAVITY	DIFFERENTIAL		OPEN START, INCREASE (1)	
E	VOLTAGE (EMF)		SENSOR (PRIMARY ELEMENT)		
F	FLOW RATE	RATIO (FRACTION)			FAIL (1)
G	GAUGING (DIMENSIONAL)		GLASS VIEWING DEVICE		
H	HAND				HIGH OR OPEN
I	CURRENT (ELECTRICAL)		INDICATE		
J	POWER	SCAN			
K	TIME OR TIME SCHEDULE	TIME RATE OR CHANGE		CONTROL STATION	
L	LEVEL		LIGHT (PILOT)		LOW OR CLOSED
M	MOISTURE, HUMIDITY, MOTOR, MOTION	MOMENTARY		MOTOR (1)	MIDDLE OR INTERMEDIATE
N	USERS CHOICE		USER'S CHOICE		ON OR OPERATE (1)
O	USER'S CHOICE		ORIFICE (RESTRICTION)		OVERLOAD (1)
P	PRESSURE OR VACUUM		POINT (TEST CONNECTION)	PUMP (1)	
Q	QUANTITY (2)	INTEGRATE OR TOTALIZE			
R	RADIATION		RECORD		
S	SPEED OR FREQUENCY	SAFETY		SWITCH	
T	TEMPERATURE			TRANSMIT	
U	MULTIVARIABLE (2)		MULTIFUNCTION (2)	MULTIFUNCTION (2)	MULTIFUNCTION (2)
V	VIBRATION, MECHANICAL ANALYSIS			VALVE, DAMPER OR LOUVER	
W	WEIGHT OR FORCE		WELL		UNCLASSIFIED (2)
X	UNCLASSIFIED (2)	X AXIS	UNCLASSIFIED (2)	UNCLASSIFIED (2)	UNCLASSIFIED (2)
Y	EVENT, STATE, PRESENCE	Y AXIS		RELAY, COMPUTE, CONVERT	
Z	POSITION, DIMENSION	Z AXIS		DRIVE, ACTUATE OR UNCLASSIFIED FINAL CONTROL ELEMENT	

COMMON HMI/INSTRUMENT ISA TAGGING

ABBREVIATION	MEANING
AIT	ANALYTICAL INDICATING TRANSMITTER
AE	ANALYTICAL ELEMENT
AI	CHEMICAL RESIDUAL/INDICATION
CT	CYCLE TIMER
FIT	FLOW INDICATING TRANSMITTER
FE	FLOW ELEMENT
FI	FLOW INDICATION
FS	FLOAT SWITCH
HS	HAND SWITCH
JAL	POWER ALARM LOW
II	CURRENT INDICATION
LIT	LEVEL INDICATING TRANSMITTER
LE	LEVEL ELEMENT
LI	LEVEL INDICATION
LSH	LEVEL SWITCH HIGH
LSL	LEVEL SWITCH LOW
LAL	LEVEL ALARM LOW
LAH	LEVEL ALARM HIGH
PIT	PRESSURE INDICATING TRANSMITTER
PE	PRESSURE ELEMENT
PI	PRESSURE INDICATION
PSH	PRESSURE SWITCH HIGH
PSL	PRESSURE SWITCH LOW
SI	SPEED INDICATION
SIC	SPEED INDICATING CONTROLLER
TIT	TEMPERATURE INDICATING TRANSMITTER
TE	TEMPERATURE ELEMENT
TI	TEMPERATURE INDICATION
TSH	TEMPERATURE SWITCH HIGH
WIT	WEIGHT INDICATING TRANSMITTER
WE	WEIGHT ELEMENT
WI	WEIGHT INDICATION
XA	FAULT ANNUNCIATION
YL	MISC. EVENT LIGHT (IN REMOTE)

COMMON HMI/INSTRUMENT ISA TAGGING

ABBREVIATION	MEANING
ZCH	OPEN GATE/VALVE
ZCL	CLOSE GATE/VALVE
ZSH	POSITION SWITCH HIGH
ZSL	POSITION SWITCH LOW
ZLH	VALVE/GATE OPEN
ZLL	VALVE/GATE CLOSED
ZIT	POSITION INDICATING TRANSMITTER

NO.	DATE	REVISION	APP.

HATCH
750 TOWN & COUNTRY BLVD
SUITE 650
HOUSTON, TX 77024
P: 832-930-7670
TX FIRM NUMBER: F-314

SURVEYED BY:
AMANI ENGINEERING, INC.
FB NO. P-6357

STATE OF TEXAS
GUY N SEVERN
105809
LICENSED PROFESSIONAL ENGINEER
7/21/2026

CITY OF HOUSTON
HOUSTON PUBLIC WORKS

LIFT STATION RENEWAL & REPLACEMENT PROJECT
INSTRUMENTATION LEGENDS & SYMBOLS-II

WBS NUMBER	FOR CITY OF HOUSTON USE ONLY
R-000267-0173-4	HOUSTON PUBLIC WORKS ACCEPTED AND FILED 82825 CITY DRAWING NUMBER Approval Date 08/14/26 HOUSTON TX
DRAWING SCALE	
NTS	
CITY OF HOUSTON PM	
NUPUR KRISHNAN P.E. N.K.	
Z0E123	SHEET NO. 264 OF 274

PLOTTED: 8/11/2026 1:25 PM
PLOT STYLE: COH.ctb
FILE PATH: \\wuspploti01\d$\Global ProjectWise Plotting - WUS\Queue 5\queue5.dwg

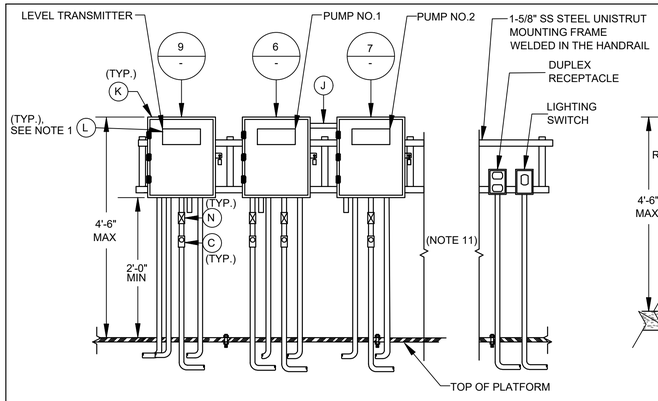

DETAIL 1 (NTS)

BROOKLET LS

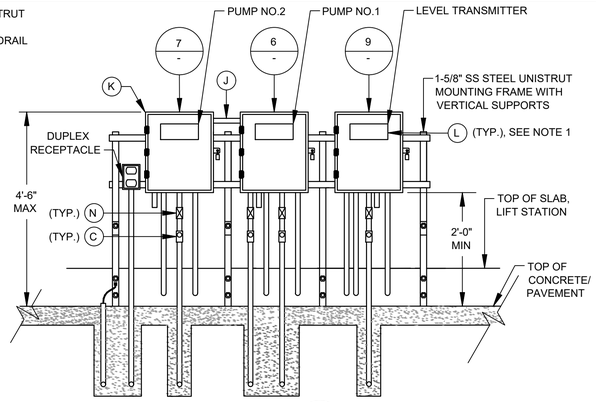

DETAIL 2 (NTS)

POST OAK #2 LS

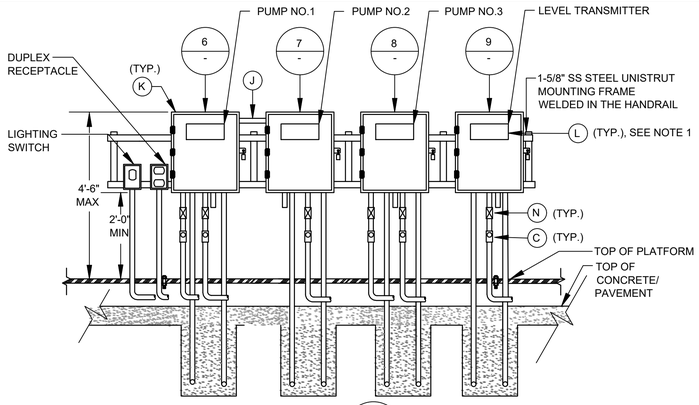

DETAIL 3 (NTS) (SEE NOTE 9)

BRAESWOOD N LS & SYNOTT RD. #1 LS

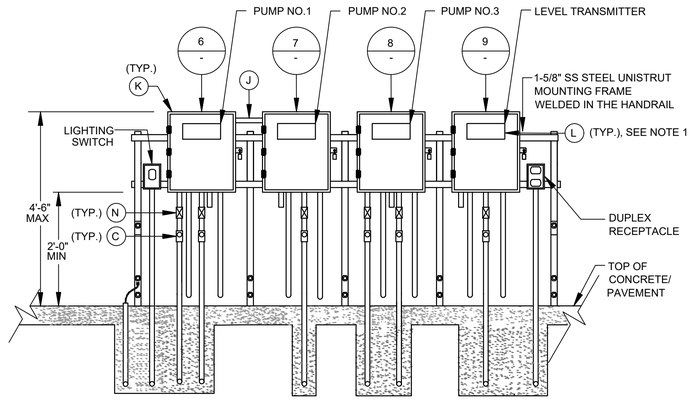

DETAIL 4 (NTS)

N.E SLUDGE TRANSFER LS

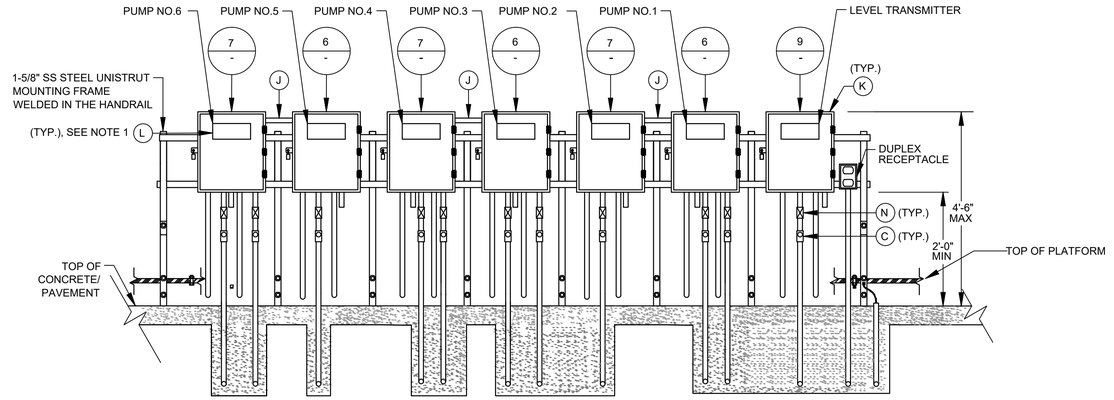

DETAIL 5 (NTS)

BISSONNET #4 LS

NOTES:

1. NAMEPLATES SHALL BE MOUNTED TO JUNCTION BOXES USING 316 STAINLESS STEEL HARDWARE.
2. MAINTAIN MINIMUM SEPARATION REQUIRED UNDER NEC ARTICLE 504, BETWEEN INTRINSICALLY SAFE CONTROL WIRING AND NONINTRINSICALLY SAFE MOTOR FEEDER WIRING.
3. UNLESS OTHERWISE NOTED, ALL EXPOSED CONDUITS SHALL BE PVC COATED RIGID GALVANIZED STEEL.
4. UNLESS OTHERWISE NOTED, ALL NUTS, BOLTS, SCREWS WASHERS, ETC SHALL BE TYPE 316 STAINLESS STEEL.
5. ALL UNDERGROUND CONDUITS TO BE ENCASED IN REINFORCED CONCRETE DUCTBANK.
6. PROVIDE ANTI-CORROSIVE SPRAY ON ANY BARE METAL PARTS OR EXPOSED WIRE.
7. SEE WIRING SCHEMATICS FOR TERMINALS AND WIRE NUMBERS.
8. ANY CONDUIT REQUIRING A CSBE SEAL, SHALL BE A MINIMUM SIZE OF 2 1/2" PER CABLE.
9. DETAIL SHOWN MAY BE MODIFIED PER SITE SITUATION.
10. COORDINATE WITH WASTE WATER OPERATIONS ELECTRICAL ORGANIZATION FOR THE OPENING OF JUNCTION BOXES TO THE SIDE OF WET WELL IF REQUIRED DURING CONSTRUCTION.
11. SPACE RESERVED FOR INSTALLING THE LIGHTING PANELBOARD AND PPU-AC PANEL, SEE ELECTRICAL SITE PANEL No. C1E62.

JUNCTION BOX EQUIPMENT SCHEDULE

- A - OZ GEDNEY CSBE SEAL
- B - WATERTIGHT CONDUIT HUB WITH INSULATED BUSHING
- C - CLASS I, DIV 1, EXPLOSION PROOF SEAL INSTALLED PER NEC DIV 501
- D - POWER TERMINAL BLOCK W/SCREW DOWN BOX LUGS
- E - CONTROL TERM BLOCK W/SCREW DOWN BOX LUGS
- F - MULTI-CONDUCTOR CABLE, REMOVE OUTER JACKET AS SHOWN
- G - WIRING AS SCHEDULED
- H - WIRING HARNESS PERMANENTLY AFFIXED
- I - PUMP CONTROL WIRING FROM PUMPS 2; 2 & 3; 4; OR D2, AS APPLICABLE
- J - 1 1/2" PVC COATED CONDUIT NIPPLE
- K - NEMA 4X STAINLESS STEEL JUNCTION BOX WITH GASKETED FRONT COVER, SINGLE QUARTER TURN, OIL-TIGHT LATCH AND PADLOCKING PROVISIONS, HOFFMAN D-3L16H1206 SS LF OR EQUAL. MINIMUM SIZE: 12"W X 16"H X 6"D
- L - NAMEPLATE, SEE SPECIFICATIONES (SEE NAMEPLATE SCHEDULE)
- M - MOTOR RATED SWITCH
- N - EXPANSION FITTING
- O - DRAIN VENT

*REPLACE 'X' PER NOTATION SCHEDULE

NOTATION SCHEDULE

'X'	PUMP NO.
2	1
3	2
4	3
5	4
7	5
8	6

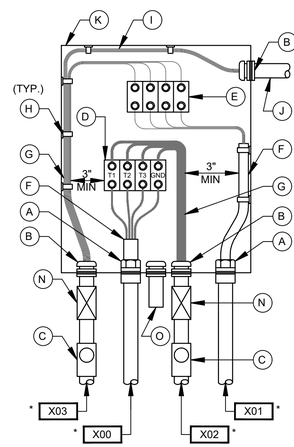

BEGINNING -JUNCTION BOX

DETAIL 6A (NTS) (SEE NOTE 7)

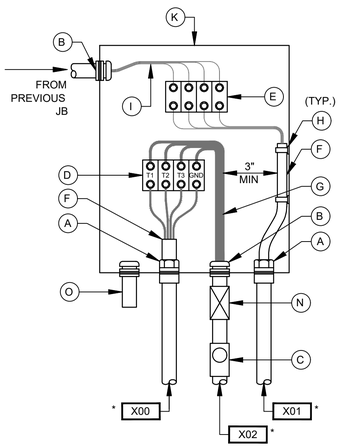

INTERMEDIATE - JUNCTION BOX

DETAIL 6B (NTS) (SEE NOTE 7)

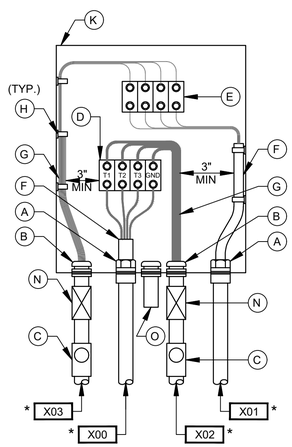

END - JUNCTION BOX

DETAIL 6C (NTS) (SEE NOTE 7)

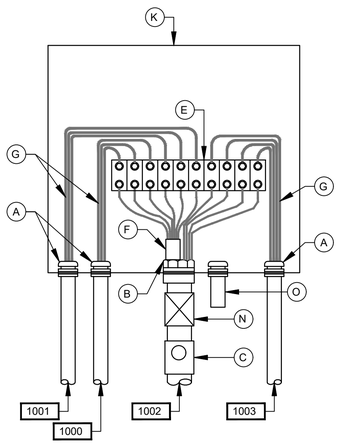

LEVEL TRANSMITTER - JUNCTION BOX

DETAIL 6D (NTS) (SEE NOTE 7)

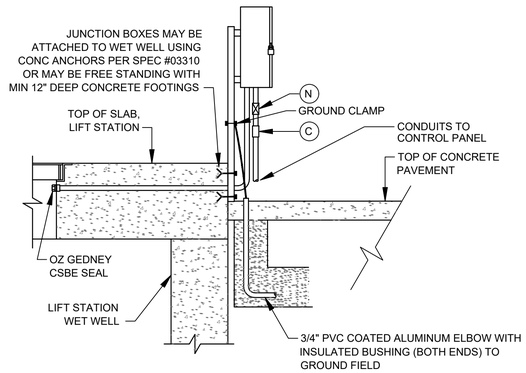

TYP SIDE VIEW FOR DETAIL 2,4,5 (SEE NOTE 10)

HATCH
750 TOWN & COUNTRY BLVD
SUITE 650
HOUSTON, TX 77024
P: 832-930-7670
TX FIRM NUMBER: F-314

SURVEYED BY:
AMANI ENGINEERING, INC.
FB NO. P-6357

STATE OF TEXAS
GUY N SEVERN
105809
LICENSED PROFESSIONAL ENGINEER
7/21/2026

CITY OF HOUSTON
HOUSTON PUBLIC WORKS

LIFT STATION RENEWAL & REPLACEMENT PROJECT

TYPICAL JUNCTION BOX DETAILS

WBS NUMBER	R-000267-0173-4
DRAWING SCALE	NTS
CITY OF HOUSTON PM	NUPUR KRISHNAN P.E. N.K.
SHEET NO.	265 OF 274

FOR CITY OF HOUSTON USE ONLY

HOUSTON PUBLIC WORKS
ACCEPTED AND FILED
82825
CITY DRAWING NUMBER
Approval Date 08/14/26
HOUSTON TX

Z0E124

NO.	DATE	REVISION	APP.

PLOTTED: 8/11/2026 1:26 PM
PLOT STYLE: COH.ctb
FILE PATH: \\wsppplot01\d$\Global ProjectWise Plotting - WUS\Queue 2\queue2.dwg

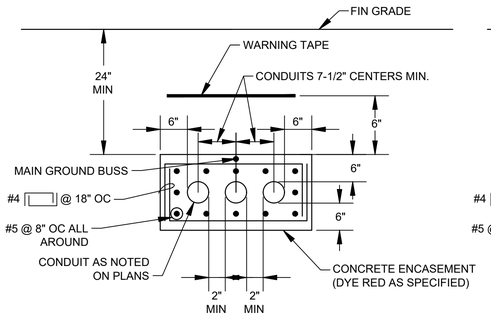

TYP MULTI-CONDUIT DUCTBANK SECTION

NOTE: TIE MAIN GROUNDING BUS TO REBAR AT A MAXIMUM INTERVAL OF EVERY 20 FEET.

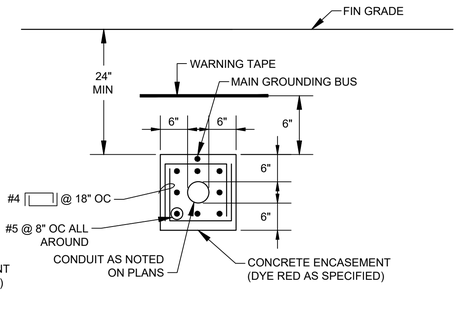

TYP SINGLE-CONDUIT DUCTBANK SECTION

DETAIL 7
NTS -

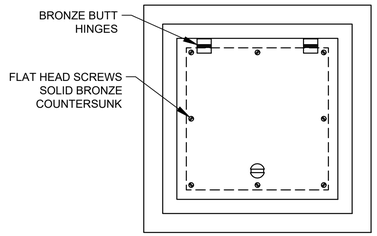

TOP PLAN

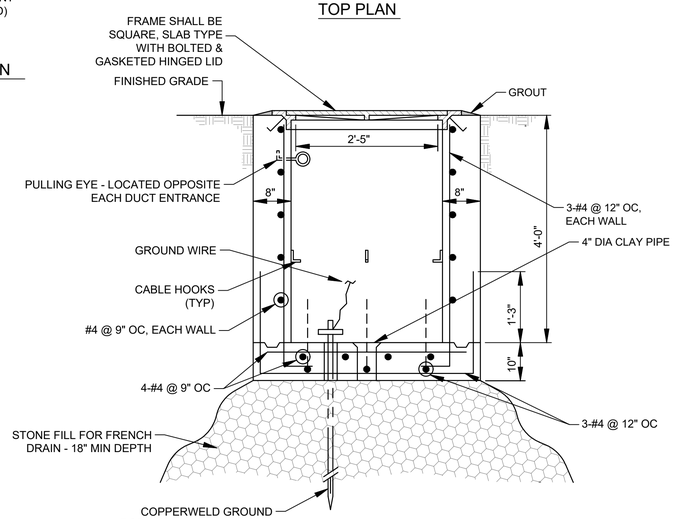

SECTION

TYPICAL ELECTRICAL HANDHOLE CONSTRUCTION

DETAIL 8
NTS -

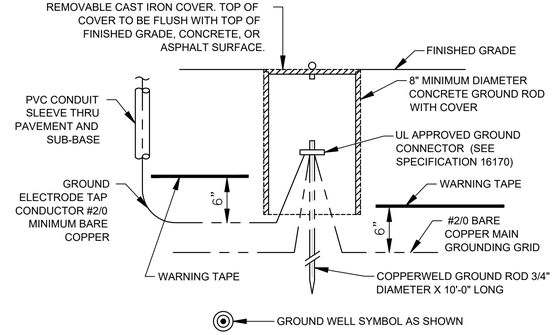

TYPICAL GROUND ROD AND WELL INSTALLATION

DETAIL 9
NTS -

GROUND CONNECTOR SCHEDULE	
WIRE SIZE	BURNDY
#2 AWG	GAR 6426
#2/0 AWG	GAR 6426
#4/0 AWG	GAR 6429
500 kcmil	GAR 6434

TYPICAL GROUND ROD INSTALLATION

DETAIL 12
NTS -

NOTE: WALL SEAL SHOWN IS TYPICAL FOR EACH CONDUIT IN DUCTBANK.

SINGLE ENDED TYPE

FOR USE WHERE CONDUIT OUTSIDE THE STRUCTURE IS ENCASED IN CONCRETE

DOUBLE ENDED TYPE WITH MEMBRANE

FOR USE WHERE CONDUIT OUTSIDE THE STRUCTURE IS ENCASED IN CONCRETE

TYPICAL CONDUIT SEALS

DETAIL 10
NTS -

PLAN

TYPICAL DUCTBANK ENTRANCE AT STRUCTURE WALL

DETAIL 11
NTS -

HATCH
750 TOWN & COUNTRY BLVD
SUITE 650
HOUSTON, TX 77024
P: 832-930-7670
TX FIRM NUMBER: F-314

SURVEYED BY:
AMANI ENGINEERING, INC.
FB NO. P-6357

STATE OF TEXAS
GUY N SEVERN
105809
LICENSED PROFESSIONAL ENGINEER
7/21/2026

CITY OF HOUSTON
HOUSTON PUBLIC WORKS

LIFT STATION RENEWAL & REPLACEMENT PROJECT
TYPICAL ELECTRICAL DETAILS

WBS NUMBER
R-000267-0173-4
DRAWING SCALE
AS NOTED
CITY OF HOUSTON PM
NUPUR KRISHNAN P.E. N.K.

FOR CITY OF HOUSTON USE ONLY

HOUSTON PUBLIC WORKS
ACCEPTED AND FILED
82825
CITY DRAWING NUMBER
Approval Date 08/14/26
HOUSTON TX

Z0E125

SHEET NO. 266 OF 274

NO.	DATE	REVISION	APP.

PLOTTED: 8/11/2026 1:26 PM
PLOT STYLE: COH.ctb
FILE PATH: \\wusppplot01\d$\Global ProjectWise Plotting - WUS\Queue 1\queue1.dwg

PLOT STYLE: COH.ctb
PLOTTED: 5/20/2026 9:08 AM
FILE PATH: \\wusppplot01\d$\Global ProjectWise Plotting - WUS\Queue 3\queue3.dwg

NO.	DATE	REVISION	APP.

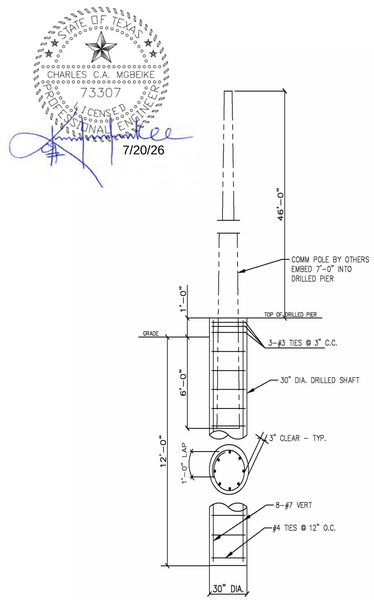

COMMUNICATION POLE FOOTING

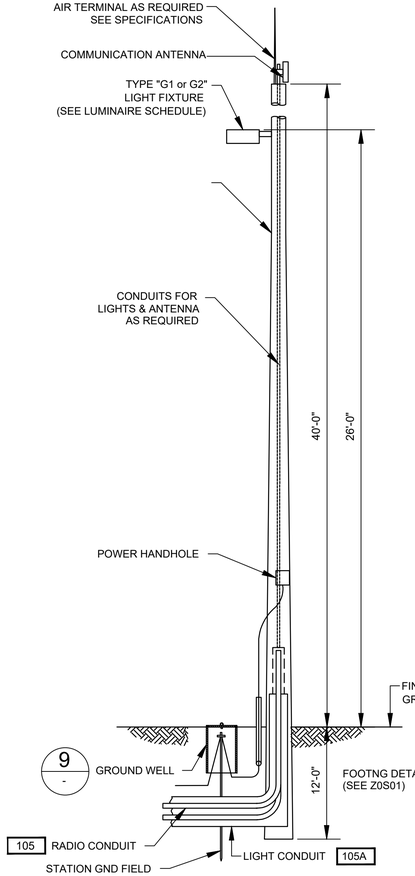

COMMUNICATION POLE MOUNTING DETAIL

DETAIL 15 NTS

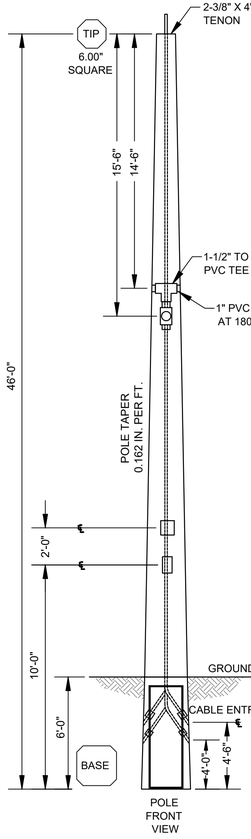

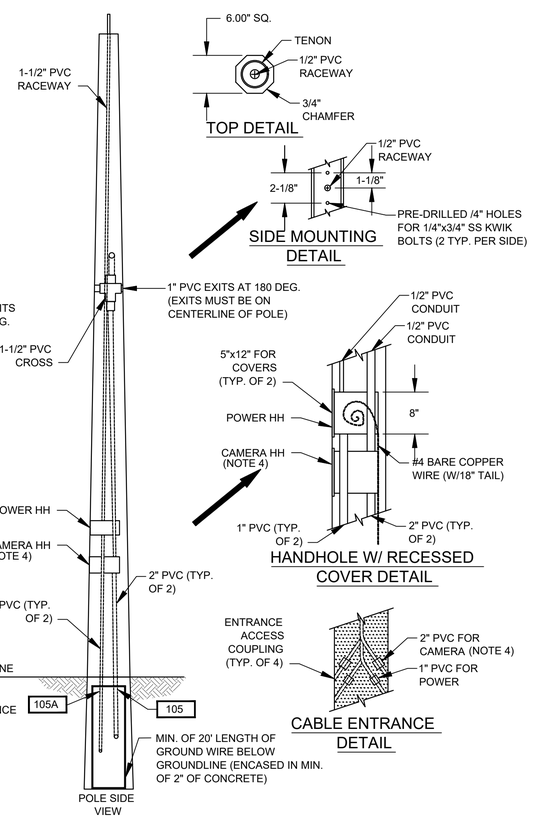

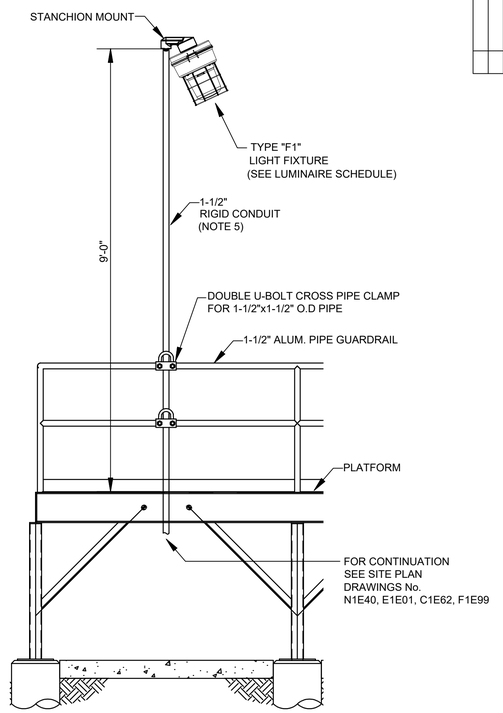

PLATFORM LIGHT MOUNTING DETAIL

DETAIL 16 NTS

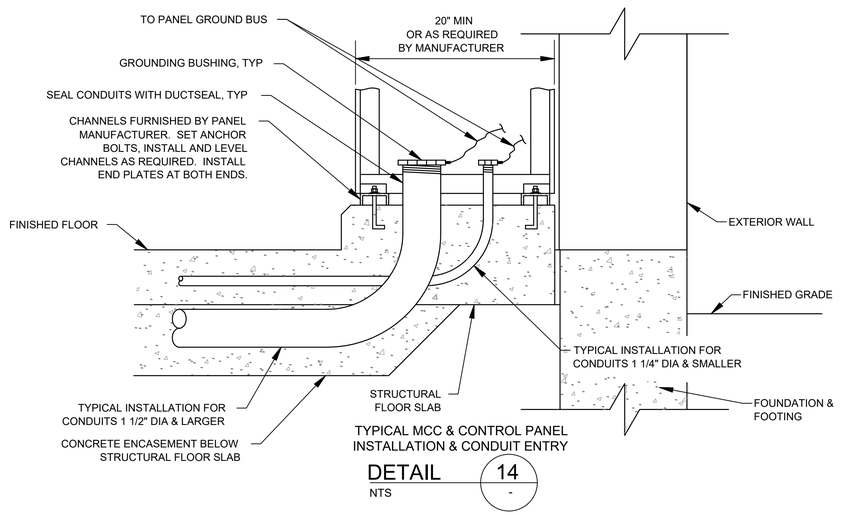

TYPICAL MCC & CONTROL PANEL INSTALLATION & CONDUIT ENTRY

DETAIL 14 NTS

NOTES:

1. ON GROUND WIRE TERMINATIONS, ALL PAINTED OR COATED METAL SURFACES SHALL BE REMOVED AND CLEANED TO BARE METAL. TO OBTAIN A SOUND GROUND CONNECTION. ONCE INSTALLED APPLY PROTECTIVE COATING ON BARE METAL AREAS PER MANUFACTURER REQUIREMENTS.
2. PRECAST CONCRETE POLE TO MOUNT THE RADIO RECEIVER.
3. 1" CONDUIT TO EXTEND TO THE TOP OF POLE FOR ETHERNET CABLE FOR RADIO.
4. NO CAMERAS TO INSTALLED AT LIFT STATION SITES.
5. 1-1/2" PIPE SHALL BE ATTACHED TO 1-1/2" STRUCTURAL PIPE PLATFORM USING A 1.5" × 1.5" GALVANIZED DOUBLE UBOLT CROSS PIPE CLAMP, INSTALLED AT 90 DEGREE PIPE INTERSECTION.

LUMINAIRE SCHEDULE

FIXTURE TYPE	VOLTAGE	LAMP TYPE	TOTAL INPUT WATTS	TOTAL OUTPUT LUMENS	MOUNT	DESCRIPTION	MAKE/MODEL
G1	MVOLT 120/277 UNIVERSAL DRIVER	LED	68	9909	POLE MOUNTED	LED AREA LUMINAIRE, POWDER COATED DIE-CAST ALUMINUM HOUSING, -29°C TO 40°C OPERATING TEMPERATURE, 4000K COLOR TEMPERATURE, UL 1598 WET LOCATION LISTED.	LITHONIA LIGHTING D-SERIES POLE MOUNT DSX1 LED P2 40K T4M MVOLT RPA FAO DDBXD.
G2	MVOLT 120/277 UNIVERSAL DRIVER	LED	279	34500	POLE MOUNTED	LED AREA LUMINAIRE, POWDER COATED DIE-CAST ALUMINUM HOUSING, -29°C TO 40°C OPERATING TEMPERATURE, 4000K COLOR TEMPERATURE, UL 1598 WET LOCATION LISTED.	LITHONIA LIGHTING D-SERIES POLE MOUNT DSX1 LED P9 40K T4M MVOLT RPA FAO DDBXD
F1	120/277 UNIVERSAL DRIVER WITH EMERGENCY BATTERY PACK	LED	65	9692	STANCHION MOUNT 1-1/2"	LED LUMINAIRE FOR HARSH AND HAZARDOUS ENVIRONMENTS, COPPER FREE ALUMINUM WITH A CORROSION RESISTANT EPOXY FINISH, -29°C TO 40°C OPERATING TEMPERATURE, WITH AN INTEGRATED INTELLIGENT EMERGENCY (IE2) BACKUP SYSTEM, GLASS GLOBE WITH PROTECTIVE GUARD. IT IS RATED NEMA 3 / 4X AND IP66, SUITABLE FOR WET AND OUTDOOR LOCATIONS.	KILLARK VM4LB SERIES STANCHION MOUNT VM4LB9IE230DSGLG, WITH EMERGENCY (IE2) BACKUP SYSTEM,

HATCH
750 TOWN & COUNTRY BLVD
SUITE 650
HOUSTON, TX 77024
P: 832-930-7670
TX FIRM NUMBER: F-314

SURVEYED BY:
AMANI ENGINEERING, INC.
FB NO. P-6357

STATE OF TEXAS · GUY N SEVERN · 105809 · LICENSED PROFESSIONAL ENGINEER · 7/21/2026

CITY OF HOUSTON
HOUSTON PUBLIC WORKS

LIFT STATION RENEWAL & REPLACEMENT PROJECT
ELECTRICAL YARD
LIGHT&COMM. POLE DETAILS

WBS NUMBER	R-000267-0173-4
DRAWING SCALE	NTS
CITY OF HOUSTON PM	NUPUR KRISHNAN P.E. N.K.

FOR CITY OF HOUSTON USE ONLY
HOUSTON PUBLIC WORKS
ACCEPTED AND FILED
82825 CITY DRAWING NUMBER
Approval Date 08/14/26
HOUSTON TX

Z0E126

SHEET NO. 267 OF 274

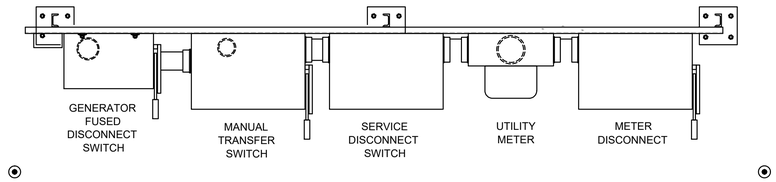

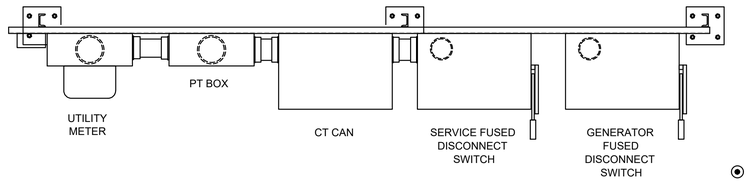

NOTES:

1. CHASE NIPPLE(S) WITH REMOVABLE CAP(S) FOR CONNECTION OF PORTABLE GENERATOR. NOTE: CAP(S) TO BE ATTACHED TO PANEL OR CONDUIT(S) BY STAINLESS STEEL CHAIN.
2. T.O.C DEFINED AS TOP OF PAVEMENT OR TOP OF PANEL ENCLOSURE PEDESTAL WHICHEVER IS HIGHER. (SEE NOTE B).

NO.	DATE	REVISION	APP.

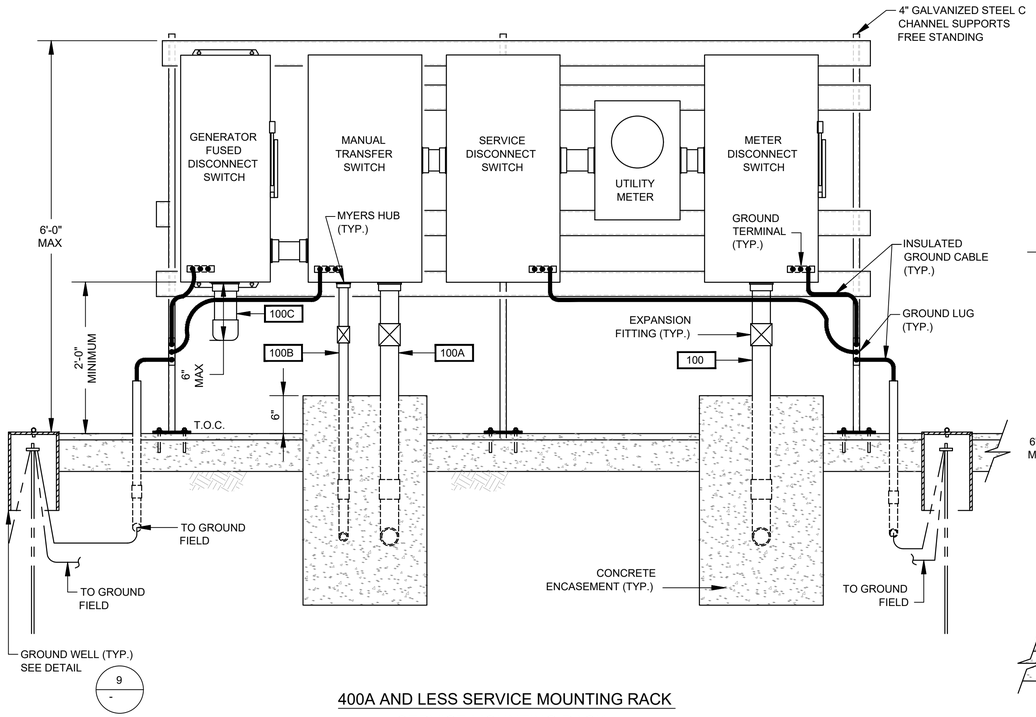

400A AND LESS SERVICE MOUNTING RACK

SERVICE MOUNTING RACK

DETAIL 17 -

NTS.

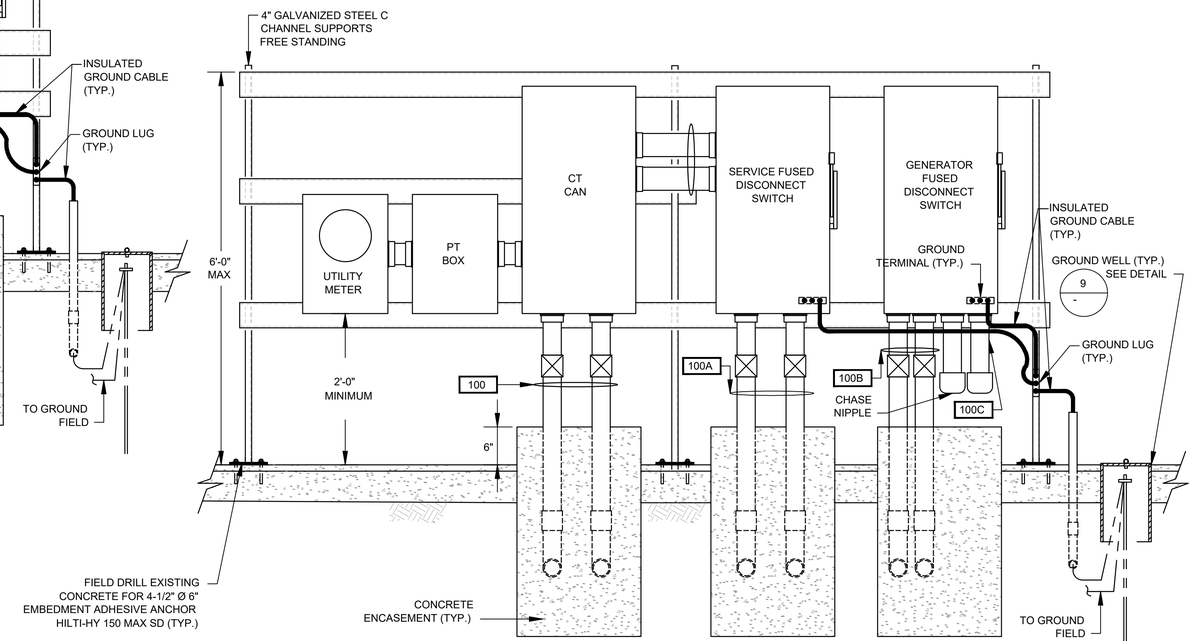

ELEVATION B

500A AND GREATER SERVICE MOUNTING RACK

HATCH
750 TOWN & COUNTRY BLVD
SUITE 650
HOUSTON, TX 77024
P: 832-930-7670
TX FIRM NUMBER: F-314

SURVEYED BY:
AMANI ENGINEERING, INC.
FB NO. P-6357

STATE OF TEXAS
GUY N SEVERN
105809
LICENSED PROFESSIONAL ENGINEER
7/21/2026

CITY OF HOUSTON

HOUSTON PUBLIC WORKS

LIFT STATION RENEWAL & REPLACEMENT PROJECT

ELECTRICAL SERVICE RACK DETAILS

WBS NUMBER	FOR CITY OF HOUSTON USE ONLY
R-000267-0173-4	HOUSTON PUBLIC WORKS ACCEPTED AND FILED 82825 CITY DRAWING NUMBER Approval Date 08/14/26 HOUSTON TX
DRAWING SCALE	
NTS	
CITY OF HOUSTON PM	
NUPUR KRISHNAN P.E. N.K.	
SHEET NO. 268 OF 274	

Z0E127

PLOTTED: 8/11/2026 1:29 PM

PLOT STYLE: COH.ctb

FILE PATH: \\wuspplot01\d$\Global ProjectWise Plotting - WUS\Queue 4\queue4.dwg

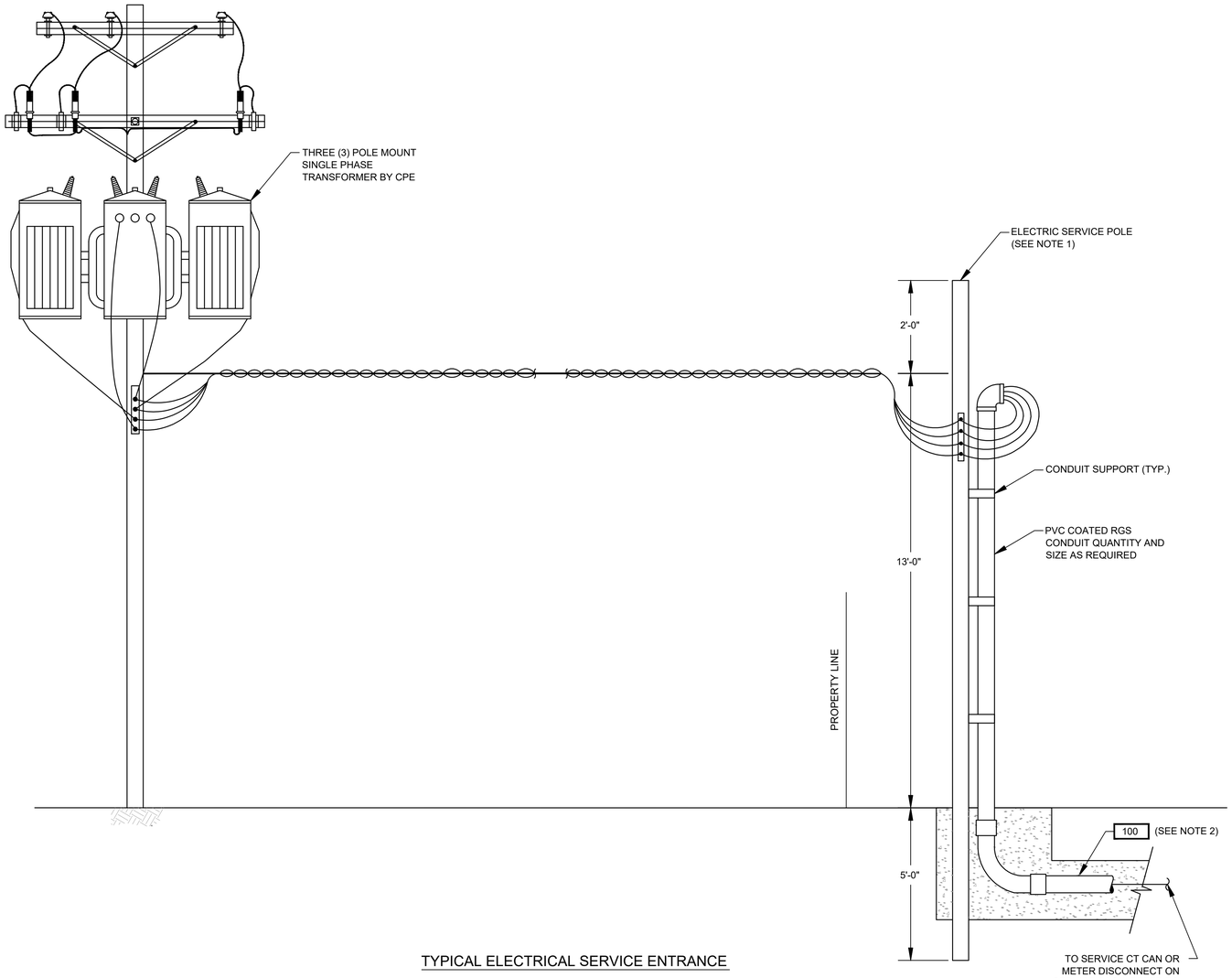

TYPICAL ELECTRICAL SERVICE ENTRANCE

FOR POWER SUPPLY BELOW 500KVA

DETAIL 19

NTS. -

NOTES:

1. WOODEN POLE 20' LONG. TOP DIAMETER 6", BOTTOM DIAMETER 8" PROVIDED AND INSTALLED BY ELECTRICAL CONTRACTOR.
2. ELECTRICAL SERVICE FEEDER PROVIDED AND INSTALLED BY ELECTRICAL CONTRACTOR. COORDINATE WITH CPE FOR THE REQUIREMENTS OF THE INSTALLATION.

NO.	DATE	REVISION	APP.

HATCH
750 TOWN & COUNTRY BLVD
SUITE 650
HOUSTON, TX 77024
P: 832-930-7670
TX FIRM NUMBER: F-314

SURVEYED BY:
AMANI ENGINEERING, INC.
FB NO. P-6357

STATE OF TEXAS
GUY N SEVERN
105809
LICENSED
PROFESSIONAL ENGINEER
7/21/2026

CITY OF HOUSTON
HOUSTON PUBLIC WORKS

LIFT STATION RENEWAL & REPLACEMENT PROJECT
ELECTRICAL SERVICE DETAILS

WBS NUMBER
R-000267-0173-4
DRAWING SCALE
NTS
CITY OF HOUSTON PM
NUPUR KRISHNAN P.E. N.K.
SHEET NO. 269 OF 274

FOR CITY OF HOUSTON USE ONLY

HOUSTON PUBLIC WORKS
ACCEPTED AND FILED
82825
CITY DRAWING NUMBER
Approval Date 08/14/26
HOUSTON TX

Z0E128

PLOTTED: 8/11/2026 1:29 PM
PLOT STYLE: COH.ctb
FILE PATH: \\wuspplot01\d$\Global ProjectWise Plotting - WUS\Queue 1\queue1.dwg

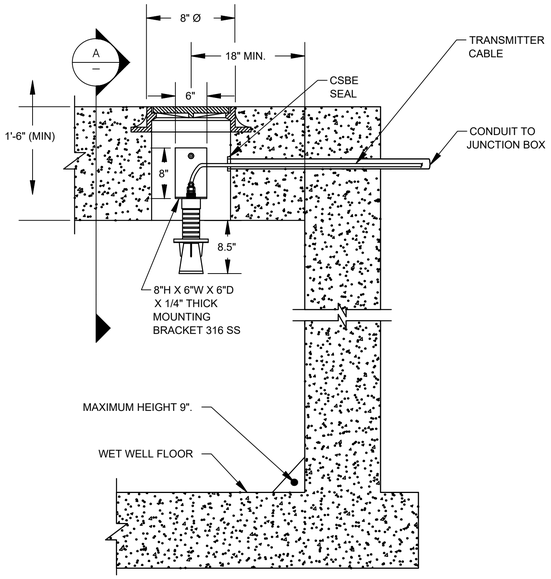

RADAR LEVEL TRANSMITTER MOUNTING
(TYP. LT-1, LT-2)

DETAIL 20
NTS -

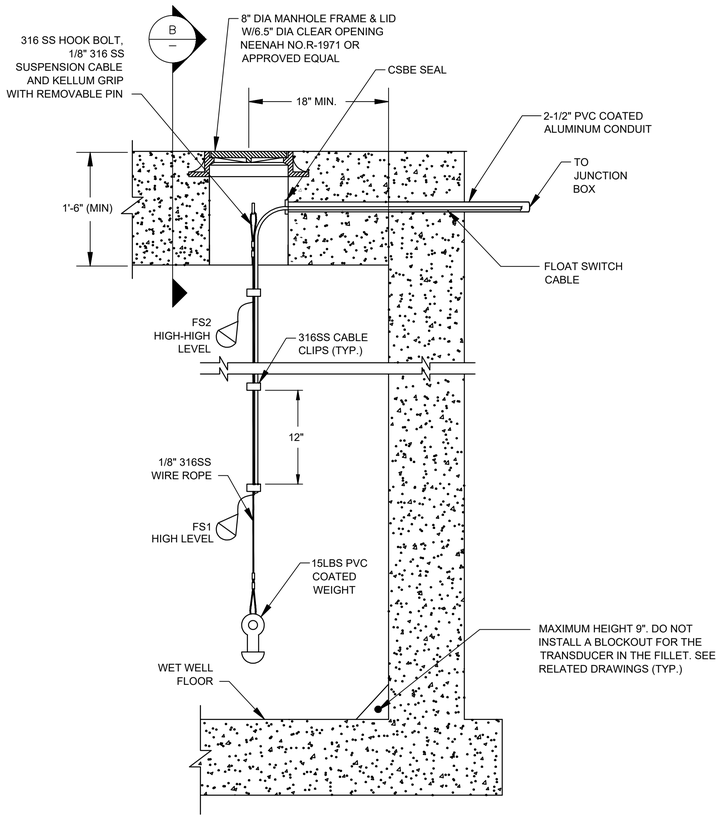

FLOAT SWITCH MOUNTING

DETAIL 21
NTS -

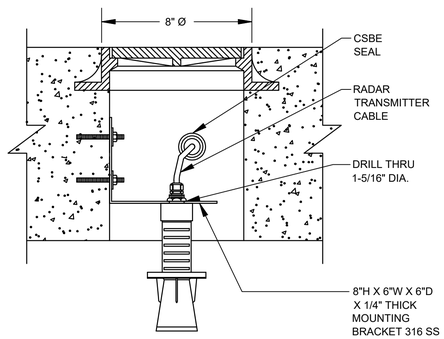

RADAR LEVEL TRANSMITTER MOUNTING
TYP. LT-1 & LT-2

SECTION A
NTS -
(SEE NOTES 1, 2, 4 & 5)

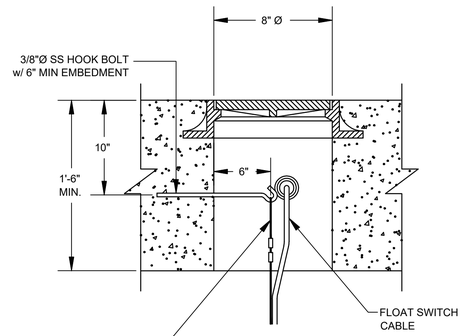

FLOAT SWITCH MOUNTING

SECTION B
NTS -
(SEE NOTES 3, 4 & 5)

NOTES:

1. NEW RADAR LEVEL TRANSMITTERS FOR LT-1, LT-2.
2. NEW MANHOLES FOR RADAR LEVEL TRANSMITTERS LT-1, LT-2.
3. NEW MANHOLE FOR FLOAT SWITCHES.
4. PAINT MANHOLE LIDS AND HATCHES HUNTER GREEN.
5. NEW MANHOLE INSTALLATION.

NO.	DATE	REVISION	APP.

HATCH
750 TOWN & COUNTRY BLVD
SUITE 650
HOUSTON, TX 77024
P: 832-930-7670
TX FIRM NUMBER: F-314

SURVEYED BY:
AMANI ENGINEERING, INC.
FB NO. P-6357

STATE OF TEXAS
GUY N SEVERN
105809
LICENSED PROFESSIONAL ENGINEER
7/21/2026

CITY OF HOUSTON
HOUSTON PUBLIC WORKS

LIFT STATION RENEWAL & REPLACEMENT PROJECT
RADAR LEVEL TRANSMITTER GAUGING SYSTEM DETAILS INSTALLATION & DETAILS-I

WBS NUMBER	FOR CITY OF HOUSTON USE ONLY
R-000267-0173-4	HOUSTON PUBLIC WORKS ACCEPTED AND FILED 82825 CITY DRAWING NUMBER Approval Date 08/14/26 HOUSTON TX
DRAWING SCALE	
AS NOTED	
CITY OF HOUSTON PM	
NUPUR KRISHNAN P.E. N.K.	
SHEET NO. 270 OF 274	

Z0E129

PLOTTED: 8/11/2026 1:28 PM
PLOT STYLE: COH.ctb
FILE PATH: \\wwsppplot01\d$\Global ProjectWise Plotting - WUS\Queue 2\queue2.dwg

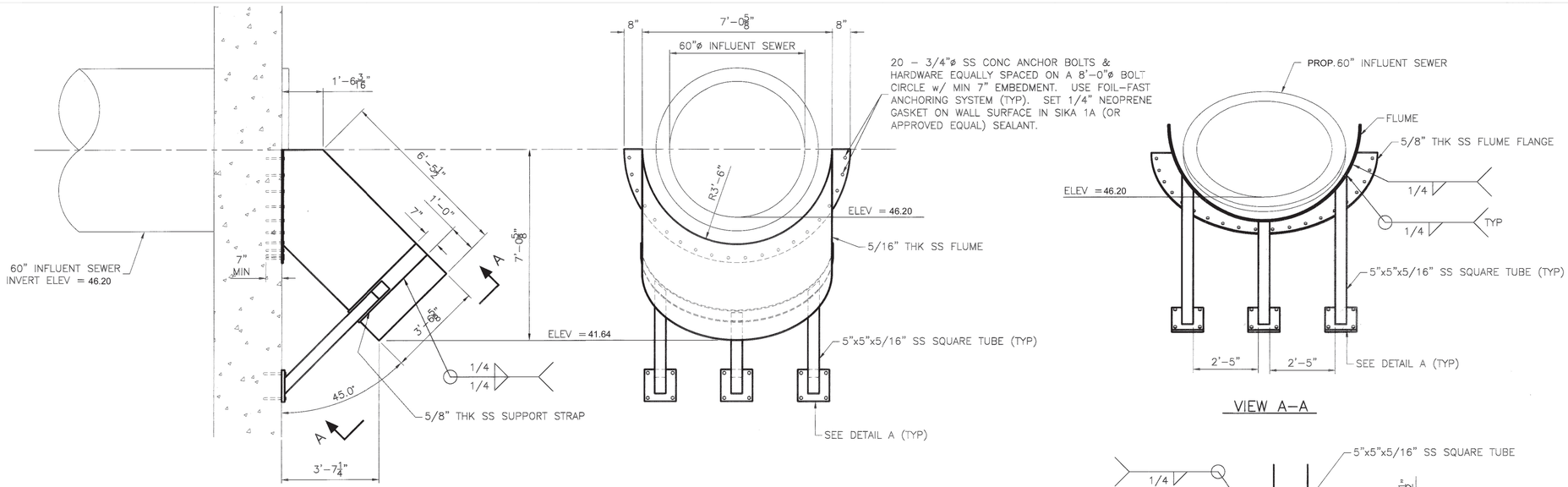

INFLUENT ENTRANCE FLUME DETAILS

VIEW A-A

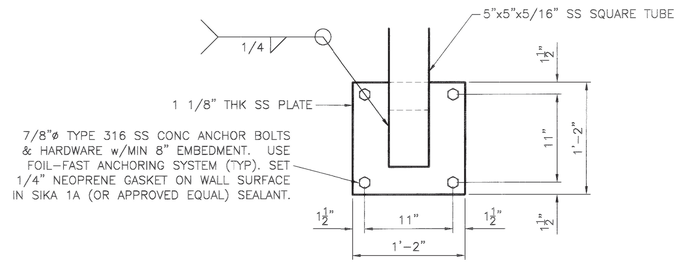

DETAIL A

NOTES:

1. DETAILS SHOWN ABOVE ARE THE ORIGINAL FLUME DESIGN FABRICATION DRAWINGS. CONTRACTOR SHALL INSPECT REMOVED FLUME FOR CONFORMANCE WITH THESE ORIGINAL DESIGN DIMENSIONS. CONTRACTOR TO DETERMINE ANY NECESSARY DIMENSIONAL REVISIONS REQUIRED TO PROVIDE PROPER FIT FOR CURRENT CONDITIONS PRIOR TO FABRICATION OF REPLACEMENT FLUME.
2. CONTRACTOR SHALL COORDINATE WITH THE ENGINEER, ANY NECESSARY DIMENSIONAL CHANGES NECESSARY.
3. DIMENSIONAL DRAWINGS/SKETCHES PROVIDED BY THE FABRICATOR SHALL BE SUBMITTED TO THE ENGINEER FOR APPROVAL PRIOR TO FABRICATION. THE CITY WILL NOT BE LIABLE FOR FABRICATIONS MADE WITHOUT PRIOR APPROVAL FROM THE ENGINEER.

0 1 2 3 ORIGINAL SCALE IN INCHES FOR REDUCED PLANS

NO.	DATE	REVISION	APP.

AMANI ENGINEERING, INC.
11011 RICHMOND AVENUE
SUITE 700
HOUSTON, TEXAS 77024
TEL: (713) 270-5700
TBPE REG. NO. F-4528
TBPELS REG. NO. 1028200

HATCH
750 TOWN & COUNTRY BLVD.
SUITE 650
HOUSTON, TEXAS 77024
P:832-930-7670
TX FIRM NUMBER: F-314

SURVEYED BY:
AMANI ENGINEERING,INC.
FB NO. P-6357

STATE OF TEXAS
DAVID L. BROWN
48282
REGISTERED PROFESSIONAL ENGINEER
8/11/2026

CITY OF HOUSTON
HOUSTON PUBLIC WORKS

LIFT STATION RENEWAL & REPLACEMENT PROJECT

BISSONNET #4 LIFT STATION
PROPOSED FLUME DETAILS

WBS NUMBER	FOR CITY OF HOUSTON USE ONLY
R-000267-0173-4	HOUSTON PUBLIC WORKS ACCEPTED AND FILED 82825 CITY DRAWING NUMBER Approval Date 08/14/26 HOUSTON TX
DRAWING SCALE	
Scale N.T.S.	
CITY OF HOUSTON PM	
N.K. NUPUR KRISHNAN, PE	
Z0E130	SHEET NO. 271 OF 274

FILE NAME:
PLOTTED ON:

P:\Civil\2024\24013 - Hatch - COH FY20 Lift Stations\CAD_DWG\Phase IV\6-Phase II BISSONNET #4\Phase II LS-BISSONNET #4.dwg

PLOTTED: 8/11/2026 1:31 PM
PLOT STYLE: COH.ctb
FILE PATH: \\wspplot01\d$\Global ProjectWise Plotting - WUS\Queue 5\queue5.dwg

ELECTRICAL GENERAL NOTES

1. THE NOTES CONTAINED ON THIS SHEET ARE PROVIDED FOR THE CONVENIENCE OF THE CONTRACTOR WHEN WORKING IN THE FIELD, AND CONTAIN EXCERPTS FROM THE SPECIFICATION SECTIONS. HOWEVER THE CONTRACTOR IS HEREBY ADVISED THAT THE CONTRACT DOCUMENTS CONSIST OF BOTH THE DRAWINGS AND THE SPECIFICATIONS, AND THAT THE CONTRACTOR MUST COMPLY FULLY WITH BOTH THE BOUND DRAWINGS AND THE BOUND SPECIFICATIONS.

2. ALL EQUIPMENT WIRING, RACEWAYS, ETC. SHALL BE INSTALLED AND GROUNDED IN ACCORDANCE WITH THE LATEST EDITION OF THE NATIONAL ELECTRICAL CODE, LOCAL CODES, AND INDUSTRY STANDARDS (IE. UL, NEMA, IEEE, ANSI, ETC.) THE DRAWING NOTES AND DETAILS SHALL BE COMPLIED WITH IN ADDITION TO THE REQUIREMENTS IN THE SPECIFICATIONS. REFER TO EACH SPECIFICATION SECTION FOR SPECIFIC REQUIREMENTS.

3. ALL RACEWAY INSTALLATIONS SHALL BE INSTALLED IN A MANNER TO PREVENT CONFLICTS WITH EQUIPMENT AND STRUCTURAL CONDITIONS. ALL EXPOSED RACEWAY SHALL BE INSTALLED PARALLEL TO BEAMS, CEILINGS, FLOORS AND WALLS. SEE SPECIFICATION ON RACEWAYS FOR ADDITIONAL REQUIREMENTS.

4. CONDUITS SHALL BE TERMINATED IN A NEAT MANNER AND STRICTLY IN ACCORDANCE WITH THE SPECIFICATIONS AND DRAWING DETAILS.

5. CONDUITS TERMINATED INTO ENCLOSURES SHALL BE PERPENDICULAR TO THE WALLS OF THE ENCLOSURE. THE USE OF SHORT SEALTIGHT ELBOW FITTINGS FOR SUCH TERMINATIONS IS NOT PERMITTED.

6. ALL RACEWAY INSTALLATIONS, CROSSING EXPANSION JOINTS OR TRANSITIONS FROM BELOW GRADE TO EXPOSED ABOVE GRADE, SHALL HAVE EXPANSION OR EXPANSION/DEFLECTION TYPE FITTINGS AS SPECIFIED FOR THE APPLICATION. SEE THE DRAWINGS AND THE SPECIFICATION ON RACEWAYS FOR THE EXACT TYPE OF FITTING TO BE USED.

7. NO CONDUIT SMALLER THAN 3/4", NOR WIRE SMALLER THAN NO. 12 AWG, SHALL BE USED UNLESS SPECIFICALLY NOTED.

8. ALL UNDERGROUND SINGLE CONDUITS AND DUCTBANKS OF MULTIPLE CONDUITS SHALL BE RIGID PVC CONDUIT ENCASED IN REINFORCED RED CONCRETE. CONCRETE DYED RED BEFORE PLACEMENT. MINIMUM SIZE IS 2 INCH. FIELD VERIFY THE ROUTING OF ALL EXISTING UNDERGROUND CONDUIT AND DUCTBANKS. COORDINATE ROUTING OF NEW CONDUIT AND DUCTBANKS TO AVOID INTERFERENCE WITH EXISTING CONDUIT, DUCTBANKS, AND OTHER UNDERGROUND UTILITIES.

9. ALL CHANGES OF DIRECTION GREATER THAN 20 DEGREES IN UNDERGROUND SINGLE, OR DUCTBANKS OF MULTIPLE CONDUITS, SHALL BE ACCOMPLISHED USING PVC COATED RIGID ALUMINUM LONG RADIUS BENDS. BENDS OF PVC CONDUIT GREATER THAN 20 DEGREES, OR THE USE OF FLEXIBLE CONDUIT OF ANY TYPE, WILL NOT BE PERMITTED. SEE THE SPECIFICATIONS FOR MORE REQUIREMENTS.

10. LIQUID TIGHT FLEXIBLE ALUMINUM CONDUIT SHALL BE USED FOR THE PRIMARY AND SECONDARY OF TRANSFORMERS, GENERATOR TERMINATIONS AND OTHER EQUIPMENT WHERE VIBRATION IS PRESENT. USE IN OTHER LOCATIONS IS NOT PERMITTED, EXCEPT FOR CONNECTIONS TO INSTRUMENTATION TRANSMITTERS, WHERE MULTIPLE PENETRATIONS ARE REQUIRED. LIQUID TIGHT FLEXIBLE ALUMINUM CONDUIT SHALL HAVE A MAXIMUM LENGTH NOT GREATER THAN THAT OF A FACTORY MANUFACTURED LONG RADIUS ELBOW OF THE CONDUIT SIZE BEING USED. THE MAXIMUM BENDING RADIUS SHALL NOT BE LESS THAN THAT SHOWN IN THE NEC CHAPTER 9, TABLE 2, "OTHER BENDS". BX OR AC TYPE PREFABRICATED CABLES WILL NOT BE PERMITTED.

11. THE WIRING DIAGRAMS, BLOCK DIAGRAMS, QUANTITY/SIZES OF WIRES/CONDUITS REPRESENT A SUGGESTED ARRANGEMENT BASED UPON SELECTED STANDARD COMPONENTS OF ELECTRICAL EQUIPMENT. MODIFICATIONS ACCEPTABLE TO THE ENGINEER MAY BE MADE BY THE CONTRACTOR TO ACCOMMODATE EQUIPMENT ACTUALLY APPROVED. ALL MODIFICATIONS SHALL BE SUBMITTED TO THE ENGINEER FOR APPROVAL. THE BASIC SEQUENCE AND METHOD OF CONTROL MUST BE MAINTAINED AS INDICATED ON THE DRAWINGS AND/OR SPECIFIED.

12. ALL JUNCTION BOXES, PULL BOXES AND TERMINATION BOXES IN NEMA 12 AREAS SHALL BE ALUMINUM. FOR NEMA 4X AREAS SEE SPECIFICATIONS FOR BOX DETAILS AND SPECIFICATIONS.

13. SEAL ALL RACEWAYS ENTERING JUNCTION BOXES OR CONTROL PANELS CONTAINING ELECTRICAL OR INSTRUMENTATION EQUIPMENT WITH WATERTIGHT SEALANT. REFER TO THE SPECIFICATIONS FOR DETAILS.

14. ALL EQUIPMENT AND ELECTRICAL EQUIPMENT ENCLOSURE LOCATIONS, OR TERMINAL BOX LOCATIONS, ARE APPROXIMATE. THE EXACT LOCATIONS SHALL BE COORDINATED WITH AND APPROVED BY THE OWNER/ENGINEER, DURING CONSTRUCTION, AT NO ADDITIONAL COST TO THE OWNER.

15. ALL EQUIPMENT AND ELECTRICAL EQUIPMENT ENCLOSURES DIMENSIONS ARE APPROXIMATE. ALL EQUIPMENT AND ELECTRICAL EQUIPMENT ENCLOSURES OR TERMINAL BOX DIMENSIONS SHALL BE VERIFIED WITH THE EQUIPMENT SUPPLIER. ALLOW FOR LOCATION CHANGES AND INCLUDE IN THE CONTRACT PRICE. THE EXACT LOCATIONS OF ALL ELECTRICAL EQUIPMENT AND ROUTING OF ALL CABLES AND CONDUITS SHALL BE COORDINATED WITH AND APPROVED BY THE OWNER/ENGINEER DURING CONSTRUCTION.

16. CORING OF AN EXISTING STRUCTURE SHALL BE COORDINATED WITH AND APPROVED BY THE OWNER/ENGINEER. CORING THROUGH STRUCTURAL BEAMS IS STRICTLY PROHIBITED WITHOUT PRIOR WRITTEN APPROVAL FROM THE OWNER/ENGINEER.

17. THE LOCATION OF ALL ELECTRICAL EQUIPMENT AND ROUTING OF CABLES AND CONDUITS SHALL BE COORDINATED AND APPROVED BY THE OWNER.

18. THE DUCTBANK ROUTING AS SHOWN ON THE DRAWING IS APPROXIMATE. FIELD VERIFY THE EXACT DUCTBANK ROUTING, CABLE LENGTH AND CONDUIT LENGTH.

19. PROVIDE CONDUIT SEALS FOR CONDUIT PENETRATIONS AS PER NEC AND NFPA820.

20. COORDINATE ALL WORK WITH THE OWNER.

21. LOCATE ALL UNDERGROUND UTILITIES BEFORE DIGGING. COORDINATE THE EFFORT WITH THE OWNER.

22. ALL SLOTTED CHANNEL, SLOTTED CHANNEL SUPPORT MATERIAL, WASHERS, SCREWS, NUTS, CONDUIT CLAMPS, ALL THREAD SPRING NUTS AND MISC. MOUNTING HARDWARE SHALL BE 316 STAINLESS STEEL.

23. LIGHTING FIXTURES SHALL BE MOUNTED ACCORDING TO THE MOUNTING HEIGHT GIVEN ON THE DRAWINGS. THE MOUNTING HEIGHT SHALL BE MEASURED FROM THE BOTTOM OF THE LIGHTING FIXTURE TO THE FINISHED FLOOR.

24. CONDUIT AND WIRE FOR THE HVAC EQUIPMENT AND MISCELLANEOUS DEVICES SHALL BE:

    A. 3/4" (MIN) RIGID ALUMINUM.

    B. NO.14 XHHW CU. WIRE XHHW (MIN.).

    C. IN ACCORDANCE WITH ALL ELECTRICAL AND HVAC SPECIFICATIONS REQUIREMENTS.

25. CONDUITS AND WIRES SHOWN ON THE INTERFACE DIAGRAM SHALL BE INSTALLED BY THE CONTRACTOR. GROUPING OF CONDUIT AND WIRE MAY BE CHANGED, IF APPROVED BY THE ENGINEER AND OWNER.

26. ALL CONDULETS SHALL BE FORM 7 AND SHALL HAVE 316 SS CLAMP COVERS WITH 316 SS CLAMPS AND SCREWS. SCREW DOWN COVERS ARE UNACCEPTABLE. REFER TO THE SPECIFICATIONS FOR MORE INFORMATION.

27. ALL BARE COPPER GROUNDING CONDUCTORS SHALL BE TINNED, ALL GROUND RODS SHALL BE 3/4" BY 10' LONG. ALL EXPOSED COPPER GROUND CABLES SHALL BE GREEN INSULATED CONDUCTORS. PROVIDE XHHW INSULATION.

28. WHERE NOTES ON THE DRAWING INDICATE THAT THE CONTRACTOR SHALL FIELD-VERIFY, THE INTENT IS FOR THE CONTRACTOR TO INVESTIGATE TO THE EXTENT NECESSARY TO PROVIDE THE WORK AND MATERIALS PRIOR TO BIDDING AND INCLUDE ALL COSTS IN THE BID PRICE. THE CONTRACT PRICE SHALL NOT BE INCREASED WHEN THE CONTRACTOR HAS NOT INVESTIGATED PER THE NOTES DIRECTING THAT BE DONE.

TYPICAL ENCLOSURE TYPES BY AREA TYPE

NON-HAZARDOUS AREAS	BOXES & ENCLOSURES 1	3R	4X	4X*	12	CONDUIT
OUTDOOR; GENERAL AREAS		X	X			PVC COATED ALUMINUM
OUTDOOR; CHEMICAL AREAS				X		SCHEDULE 80 PVC
INDOOR; CHEMICAL ROOM				X		SCHEDULE 80 PVC
INDOOR; CONDITIONED SPACE					X	RIGID ALUMINUM
INDOOR; NON-CONDITIONED SHOP SPACE					X	RIGID ALUMINUM
INDOOR; NON-CONDITIONED PROCESS AREA			X			RIGID ALUMINUM
INDOOR, ADMIN BUILDING	X					EMT/RIGID ALUMINUM
CLASS I, DIVISION 1	REFER TO NEC, NFPA-820, AND CONTRACT CONSTRUCTION SPECIFICATIONS					
CLASS I, DIVISION 2	REFER TO NEC, NFPA-820, AND CONTRACT CONSTRUCTION SPECIFICATIONS					

GENERAL NOTES:

- EQUIPMENT SUCH AS MOTOR CONTROL CENTER, SWITCHGEAR, VFDS, AND OTHER STAND-ALONE MOTOR STARTERS ARE TO BE SPECIFIED UNIQUELY.
- NEMA 1 ENCLOSURES ARE TO BE NEMA 1 GASKETED.
- NEMA 4X* ENCLOSURES ARE TO BE NON-METALLIC (ie PVC) NEMA 4X
- CONDUIT INSIDE ADMIN BUILDING LOCATION IS TO BE EMT IF CONCEALED IN DRY WALL (AKA SHEET ROCK WALL): OTHERWISE RIGID ALUMINUM.
- OUTDOOR GENERAL AREAS COULD BE 3R OR 4X DEPENDING ON OWNER PREFERENCE AND WHETHER WTP OR WWTP - REFER TO DRAWINGS.

CONDUIT TYPE	LOCATION
RIGID GALVANIZED CONDUIT	NOT ACCEPTABLE FOR USE ON THIS PROJECT EXCEPT FOR THE UTILITY COMPANY'S CONDUCTORS. ALL UTILITY COMPANY'S DUCTS SHALL BE AS SPECIFIED BY UTILITY COMPANY.
PVC COATED ALUMINUM CONDUIT	ALL EMBEDDED CONDUIT BENDS, UNDERGROUND DUCTBANK OF MORE THAN 20 DEGREES, AND ALL CONDUIT STUB-UPS TO A MINIMUM OF 6" ABOVE FINISHED FLOOR OR GRADE AND IN CHLORINE AND CAUSTIC ROOMS.
LIQUID TIGHT FLEXIBLE ALUMINUM CONDUIT	RACEWAY CONNECTION TO VIBRATING EQUIPMENT ONLY, IN ALL AREAS.
RIGID NON-METALLIC, SCHEDULE 40 PVC CONDUIT	UNDERGROUND ENCASED IN RED DYE REINFORCED CONCRETE. (AS WHERE SPECIFIED)
RIGID NON-METALLIC, SCHEDULE 80 PVC CONDUIT	FOR USE IN CHLORINE AND CAUSTIC ROOMS, AND UNDERGROUND. ENCASED IN RED DYED REINFORCED CONCRETE. (AS WHERE SPECIFIED)
FLEXIBLE ALUMINUM CONDUIT	FIXTURE WHIP CONNECTION TO LIGHTING FIXTURES IN NEMA 12 AREAS (MAXIMUM 3-FT). BX OR AC TYPE PREFABRICATED CABLES ARE NOT PERMITTED.
ALUMINUM RIGID METAL CONDUIT	ALL ABOVE GRADE AREAS, EXCEPT FOR CONCRETE EMBEDDED AND THOSE AREAS ALREADY DESCRIBED IN THIS TABLE
ELECTRIC METALLIC TUBING (EMT) CONDUIT	FOR USE ONLY ON CONCEALED, ABOVE GROUND, INTERIOR ELECTRICAL WIRING IN AIR-CONDITIONED ADMINISTRATIVE BUILDINGS REMOTE TO THE PROCESS AREA, AND CLEARLY DEFINED AS SUCH ON THE DRAWINGS OR IN THE SPECIFICATIONS.

DEMOLITION NOTES

1. WITH THE GENERAL DEMOLITION AND SCHEDULE. THE DRAWINGS ARE INTENDED TO CONVEY THE GENERAL NATURE AND SCOPE OF THE DEMOLITION WORK. EVERY ITEM TO BE DEMOLISHED MAY NOT BE SHOWN. FIELD VERIFY, AND INCLUDE ALL DEMOLITION WORK IN THE CONTRACT PRICE.

2. PROVIDE TEMPORARY WIRE AND CONDUIT FOR THE EQUIPMENT WHICH MAY BE AFFECTED BY THE DEMOLITION BUT TO REMAIN IN SERVICE.

3. RELOCATE AND RECONNECT POWER AND CONTROL RACEWAYS AND CONDUCTORS TO EQUIPMENT AFFECTED BY DEMOLITION WORK.

4. ALL CONDUCTORS BEING DEMOLISHED SHALL BE DISCONNECTED AND REMOVED FROM THE LOAD TO THE SOURCE. SURFACE MOUNTED CONDUITS AND MOUNTING HARDWARE SHALL BE REMOVED. UNDERGROUND CONDUITS WHICH ARE NOT BEING REMOVED OR OTHERWISE NOT BEING MADE UNUSABLE SHALL BE CAPPED AND TAGGED AS SPARE, WITH INFORMATION CLEARLY INDICATING THE LOCATION OF THE OTHER END.

5. ALL SURFACES WHERE DEMOLISHED EQUIPMENT OR CONDUIT IS REMOVED SHALL BE CLEANED, PATCHED AND PAINTED TO MATCH THE SURROUNDING SURFACE.

6. CHECK THE FUNCTION OF EACH CONDUCTOR BEFORE REMOVING OR DISCONNECTING.

7. IF A CONDUCTOR WHICH HAS TO STAY IN SERVICE (NOT BEING DEMOLISHED) IS INSTALLED IN A COMMON CONDUIT WITH CONDUCTORS WHICH ARE BEING DEMOLISHED, THE CONTRACTOR SHALL REMOVE ALL CONDUCTORS FROM THE CONDUIT, PROVIDE NEW CONDUCTORS WHICH ARE REPLACEMENTS FOR THE CONDUCTORS THAT ARE TO REMAIN IN SERVICE AND RE-INSTALL THE NEW CONDUCTORS. AFTER THE CONDUCTORS ARE PULLED, MEGGER OR VFL TEST EACH CONDUCTOR. CONNECT BOTH ENDS OF THE NEW CONDUCTORS AND TEST THE SYSTEM FOR PROPER FUNCTION. DO NOT RE-PULL USED CONDUCTORS UNLESS SPECIFIED.

8. WHERE EQUIPMENT IS BEING RE-FED FROM A NEW SOURCE, EXISTING CONDUIT MAY BE REUSED ONLY IF THE CONDUIT AND FITTINGS ARE OF THE TYPE SPECIFIED FOR NEW WORK ON THIS CONTRACT. IF NOT, THE CONDUIT AND CONDUCTORS SHALL BE REPLACED WITH NEW MATERIAL MEETING THE SPECIFICATIONS, AT NO ADDITIONAL COST TO THE OWNER.

9. THE CONTRACTOR SHALL COORDINATE WITH THE OWNER/ENGINEER TO FLAG EXISTING UNDERGROUND CONDUITS BEFORE DIGGING.

10. THE OWNER HAS THE RIGHT OF FIRST REFUSAL TO THE EQUIPMENT BEING REMOVED. THE CONTRACTOR SHALL DELIVER THE EQUIPMENT WHICH THE OWNER WISHES TO KEEP AT A LOCATION DESIGNATED BY THE OWNER. SEE SPECIFICATIONS.

11. DO NOT MAKE ANY MODIFICATIONS TO THE EXISTING ELECTRICAL EQUIPMENT UNTIL THE FOLLOWING HAS BEEN DONE:

A. THE OWNER/CONTRACTOR SHALL WITNESS AND RECORD THE CONDITION OF THE EXISTING EQUIPMENT, THE CONTRACTOR SHALL NOTE DOWN ANY DEFECTS OR DEFICIENCIES.

B. THE OWNER SHALL OPERATE THE EQUIPMENT TO DEMONSTRATE THE CURRENT CONDITIONS. THE CONTRACTOR SHALL NOTE DOWN ANY DEFECTS OR DEFICIENCIES.

C. A WRITTEN AND PHOTOGRAPHIC RECORD OF THE OPERATION AND EXISTING CONDITION SHALL BE KEPT IN A THREE RING BINDER AT THE OWNER/CONTRACTOR TRAILER, IN FORM OF PICTURES AND INFORMATION.

D. A FORM SHALL BE GENERATED BY THE CONTRACTOR TO RECORD THE OBSERVATIONS. BOTH PARTIES SHALL SIGN ON THE FORM.

E. REPLACE ALL MATERIAL OR EQUIPMENT DAMAGED DURING THE COURSE OF WORK.

F. AFTER THE CHANGES ARE MADE, THE EQUIPMENT SHALL BE INSPECTED AND RE-TESTED TO DEMONSTRATE THAT IT FUNCTIONS CORRECTLY.

G. NO PORTION OF EXISTING CONDUCTORS SHALL BE SPLICED TO NEW CONDUCTORS FOR RE-USE WITHOUT SPECIFIC APPROVAL FROM THE OWNER/ENGINEER ON A CASE-BY-CASE BASIS.

MCC, CONTROL PANELS, PANELBOARDS

THESE NOTES APPLY TO CONTROL PANELS, MCC ETC WHICH HAS TO BE REFURBISHED, MODIFIED, DISCONNECTED & RECONNECTED OR REWORKED. SEE SECTION 16060:

THE CONTRACTOR SHALL NOT MAKE ANY MODIFICATION UNTIL THE FOLLOWING HAS BEEN DONE:

A. THE OWNER/CONTRACTOR SHALL WITNESS THE CONDITION OF THE EXISTING EQUIPMENT, THE CONTRACTOR SHALL NOTE DOWN ANY DEFECTS OR DEFICIENCY.

B. THE OWNER SHALL OPERATE THE EQUIPMENT TO DEMONSTRATE THE CURRENT CONDITIONS. THE CONTRACTOR SHALL NOTE DOWN ANY DEFECTS OR DEFICIENCIES.

C. A RECORD OF THE OPERATION AND EXISTING CONDITION SHALL BE KEPT IN A THREE RING BINDER AT THE OWNER/CONTRACTOR TRAILER, IN FORM OF PICTURES AND INFORMATION.

D. A FORM SHALL BE GENERATED BY THE CONTRACTOR TO RECORD THE OBSERVATIONS. BOTH PARTIES SHALL SIGN ON THE FORM.

E. REPLACE ALL MATERIAL OR EQUIPMENT DAMAGED DURING THE COURSE OF WORK.

F. AFTER THE CHANGES ARE MADE, THE EQUIPMENT SHALL BE INSPECTED AND RE-TESTED TO DEMONSTRATE THAT IT FUNCTIONS CORRECTLY.

NO.	DATE	REVISION	APP.

HATCH
750 TOWN & COUNTRY BLVD
SUITE 650
HOUSTON, TX 77024
P: 832-930-7670
TX FIRM NUMBER: F-314

SURVEYED BY:
AMANI ENGINEERING, INC.
FB NO. P-6357

STATE OF TEXAS
GUY N SEVERN
105809
LICENSED
PROFESSIONAL ENGINEER
7/21/2026

CITY OF HOUSTON
HOUSTON PUBLIC WORKS

LIFT STATION RENEWAL & REPLACEMENT PROJECT
ELECTRICAL GENERAL NOTES

WBS NUMBER	R-000267-0173-4
DRAWING SCALE	NTS
CITY OF HOUSTON PM	NUPUR KRISHNAN P.E. N.K.
SHEET NO.	272 OF 274

FOR CITY OF HOUSTON USE ONLY

HOUSTON PUBLIC WORKS
ACCEPTED AND FILED
82825
CITY DRAWING NUMBER
Approval Date 08/14/26
HOUSTON TX

Z0E131

GENERAL CONSTRUCTION NOTES

1. THE CONTRACTOR SHALL BE FULLY RESPONSIBLE FOR ANY AND ALL DAMAGE TO THE EXISTING PUBLIC OR PRIVATE UTILITY LINES, INCLUDING BUT NOT LIMITED TO WATER LINES, WASTEWATER COLLECTION SYSTEMS AND STORM SEWERS, DURING CONSTRUCTION. ALL DAMAGES SHALL BE REPAIRED IN ACCORDANCE WITH CITY OF HOUSTON, DEPARTMENT OF PUBLIC WORKS AND ENGINEERING "STANDARD CONSTRUCTION SPECIFICATIONS" WITH LATEST ADDENDA AND AMENDMENTS THERETO, WITH NO COST TO THE DISTRICT.

2. BACKFILLING AND CLEAN–UP SHALL IMMEDIATELY FOLLOW PIPE LAYING OPERATION. PIPE LAYING SHALL BE SUSPENDED IF CLEAN–UP IS NOT SATISFACTORY.

3. CONSTRUCTION STAKING (ALIGNMENT AND GRADE) TO BE PROVIDED BY THE CONTRACTOR. NO SEPARATE PAY.

4. CONTRACTOR TO USE CAUTION WHEN CROSSING ALL EXISTING FACILITIES. ANY DAMAGE TO BE REPAIRED TO ORIGINAL OR BETTER CONDITION AT THE CONTRACTORS EXPENSE. NO SEPARATE PAY.

5. SURPLUS EXCAVATED MATERIAL SHALL BE PLACED AS DIRECTED BY THE ENGINEER. IF THE ENGINEER NOTIFIES THE CONTRACTOR THAT THE OWNER DOES NOT HAVE USE FOR THIS MATERIAL, THE SURPLUS MATERIAL BECOMES THE PROPERTY OF THE CONTRACTOR AND HIS RESPONSIBILITY TO DISPOSE OF THE MATERIAL.

6. NO STREETS SHALL BE BLOCKED WITHOUT SPECIFIC WRITTEN APPROVAL OF THE APPROPRIATE GOVERNMENTAL ENTITY.

7. CONTRACTOR SHALL MAINTAIN DRAINAGE TO ORIGINAL OR BETTER CONDITION THROUGHOUT THE CONSTRUCTION OF THE PROJECT. NO SEPARATE PAY.

8. PAVED SURFACES SHALL BE PROTECTED FROM DAMAGE FROM TRACKED EQUIPMENT.

9. WHERE NONMETALLIC PIPE IS INSTALLED, A DURABLE METAL TAPE SHALL BE INSTALLED CONCURRENTLY (APPROXIMATELY ONE FOOT ABOVE PIPE) FOR DETECTION PURPOSES.

10. ANY DEVIATION FROM DESIGN OR DETAILS SHALL BE APPROVED IN WRITING BY THE ENGINEER.

11. ALL EXISTING UNDERGROUND UTILITIES ARE SHOWN IN APPROXIMATE WAY ONLY. THE CONTRACTOR SHALL REQUEST THE EXACT LOCATION OF THESE FACILITIES BY CALLING THE ONE–CALL NOTIFICATION SYSTEM. CONTRACTOR SHALL GIVE NOTICE TO TEXAS811 (TELEPHONE NUMBER 811) REQUESTING THE LOCATION OF UNDERGROUND FACILITIES AND UTILITY LINES AT EACH EXCAVATION SITE AS REQUIRED BY TEXAS UTILITIES CODE, CHAPTER 251, NOT EARLIER THAN THE 14TH DAY BEFORE THE DATE THE EXCAVATION IS TO BEGIN OR LATER THAN THE 48TH HOUR BEFORE THE TIME THE EXCAVATION IS TO BEGIN, EXCLUDING SATURDAYS, SUNDAYS, AND LEGAL HOLIDAYS. THE CONTRACTOR IS FULLY RESPONSIBLE FOR ANY AND ALL DAMAGES WHICH OCCUR DUE TO HIS FAILURE TO REQUEST THE LOCATION AND PRESERVATION OF THESE UNDERGROUND FACILITIES. CONTRACTOR SHALL COORDINATE ALL CONFLICTS WITH THE APPROPRIATE GOVERNING AGENCY. NO SEPARATE PAY.

12. CONTRACTOR SHALL COMPLY WITH ALL FEDERAL, STATE, AND LOCAL LAWS. THIS INCLUDES BUT IS NOT LIMITED TO COMPLIANCE WITH THE LATEST EDITION OF OSHA REGULATIONS AND THE STATE OF TEXAS LAWS CONCERNING EXCAVATION AND CLEARANCES FROM OVERHEAD POWER LINES.

13. CONTRACTOR SHALL PROVIDE A TRENCH SAFETY SYSTEM TO MEET, AS A MINIMUM, THE REQUIREMENTS OF OSHA SAFETY AND HEALTH REGULATION, PART 1926, SUBPART P AS PUBLISHED IN THE FEDERAL REGISTER, VOLUME 54, NO. 209, DATED OCTOBER 31, 1989.

14. CONTRACTOR SHALL MAINTAIN AT LEAST ONE LANE OF TRAFFIC IN EACH DIRECTION DURING WORKING HOURS OR PROVIDE DETOURS AROUND CONSTRUCTION SITE, AND USE UNIFORMED POLICE TO CONTROL TRAFFIC WHEN REQUIRED BY OWNER.

15. CONTRACTOR SHALL GIVE NOTICE TO ALL AUTHORIZED INSPECTORS, SUPERINTENDENTS, OR PERSONS IN CHARGE OF PRIVATE AND PUBLIC UTILITIES OR RAILROADS AFFECTED BY HIS OPERATIONS PRIOR TO COMMENCEMENT OF WORK.

16. CONTRACTOR SHALL ASSURE HIMSELF THAT ALL CONSTRUCTION PERMITS HAVE BEEN OBTAINED PRIOR TO COMMENCEMENT OF WORK. REQUIRED PERMITS THAT CAN BE ISSUED TO CONTRACTOR WILL BE OBTAINED AT HIS EXPENSE.

17. ALL UTILITY TRENCHES TO BE BACKFILLED TO 95 PERCENT STANDARD PROCTOR DENSITY UNLESS OTHERWISE NOTED.

18. ALL DEBRIS GENERATED FROM WORK ON THIS PROJECT SHALL BE DISPOSED OF BY THE CONTRACTOR AT AN APPROVED LANDFILL.

19. ANY REFERENCE TO CODES OR SPECIFICATIONS SHALL BE WITH RESPECT TO CURRENT EDITIONS OF THE SAME.

20. INTERRUPTION OF FLOWS THROUGH EXISTING PUMPING FACILITIES IS NOT PERMITTED WITHOUT PRIOR WRITTEN APPROVAL OF OWNER. SUBMIT FOR APPROVAL A CONSTRUCTION PLAN WHICH DETAILS SCHEDULE AND TECHNIQUES TO BE USED PRIOR TO ANY CONNECTIONS TO EXISTING PIPES OR STRUCTURES. PARTIAL INTERRUPTION OF FLOWS TO BE SCHEDULED DURING LOW FLOW PERIODS FOR AS SHORT A DURATION AS PRACTICAL. MAKE PROVISIONS FOR ACCOMMODATING PEAK FLOWS WHICH MAY OCCUR DURING CONSTRUCTION OPERATIONS. OWNER AND PLANT SUPERINTENDENT TO BE NOTIFIED WHEN ANY INTERRUPTIONS ARE TO BE MADE. SHOW LOCATION, WITH DIMENSIONS, ON PROJECT "RED LINE" DRAWINGS. NO SEPARATE PAY.

21. THE FINISHED GRADE ELEVATIONS SHOWN ARE INTENDED TO PROVIDE DRAINAGE AWAY FROM THE PLANT FACILITIES. MINOR FIELD CHANGES MAY BE NECESSARY TO PROVIDE ADEQUATE DRAINAGE. GRADE UNIFORMLY BETWEEN ELEVATIONS SHOWN TO PROVIDE DRAINAGE.

22. WALL PENETRATIONS 4 INCHES AND LARGER ARE TO BE MADE WITH WALL PIPES WITH INTEGRALLY CAST OR CONTINUOUSLY WELDED WALL COLLARS. SMALLER WALL PENETRATIONS ARE TO BE MADE WITH WALL SLEEVES OR WALL PIPES.

23. MAINTAIN MINIMUM CLEARANCE OF 10 FEET FROM EDGE OF STRUCTURES TO CLOSEST EDGE OF PIPELINE ADJACENT AND PARALLEL TO EDGE OF STRUCTURE UNLESS OTHERWISE NOTED ON PLANS.

24. UNLESS OTHERWISE NOTED, ABOVE GROUND FITTINGS AND FIRST UNDERGROUND CONNECTION TO BE FLANGED

25. PLACE PARALLEL PIPING IN COMMON TRENCH WHEN FEASIBLE, MAINTAIN MINIMUM 4 FOOT HORIZONTAL SEPARATION FROM OUTSIDE OF PIPE TO OUTSIDE OF PIPE FOR PIPE 6"Ø AND ABOVE.

26. UNLESS OTHERWISE NOTED, ALL PROCESS PIPING TRENCHES UNDER PAVEMENT AND ONE FOOT FROM PAVEMENT EDGE TO BE BACKFILLED WITH CEMENT STABILIZED SAND TO 1–FOOT BELOW PAVEMENT SUBGRADE.

27. CONTRACTOR SHALL NOT OPERATE ANY EXISTING VALVES, PLANT APPURTENANCES OR PLANT EQUIPMENT. PROVIDE SUFFICIENT LEAD TIME FOR PLANT OPERATOR WHERE IT BECOMES NECESSARY TO ACTUATE OR DE–ACTUATE VALVES, PLANT APPURTENANCES OR PLANT EQUIPMENT.

28. CONTRACTOR SHALL REMOVE ALL MUD, DIRT AND DEBRIS DEPOSITED OR DROPPED ON EXISTING PAVEMENT DUE TO HIS CONSTRUCTION ACTIVITY DAILY.

29. CONSTRUCT WASTEWATER COLLECTION SYSTEMS, WATER LINES, AND STORM DRAINAGE IN ACCORDANCE WITH THE LATEST EDITION OF THE PUBLICATIONS STANDARD CONSTRUCTION SPECIFICATIONS FOR WASTEWATER COLLECTION SYSTEMS, WATER LINES, STORM DRAINAGE, AND STREET PAVING AND STANDARD CONSTRUCTION DETAILS FOR WASTEWATER COLLECTION SYSTEMS, WATER LINES, STORM DRAINAGE, AND STREET PAVING PUBLISHED BY THE CITY OF HOUSTON, DEPARTMENT OF PUBLIC WORKS AND ENGINEERING.

30. CONTRACTOR SHALL NOTIFY THE OFFICE OF THE CITY ENGINEER, DEPARTMENT OF PUBLIC WORKS AND ENGINEERING IN WRITING PRIOR TO COMMENCING CONSTRUCTION

31. ALIGNMENT, CENTERLINE CURVE DATA AND STATIONING TO BE VERIFIED BY ON–THE–GROUND SURVEY AND ELEVATIONS OF ALL CONNECTIONS TO EXISTING FACILITIES TO BE CONFIRMED PRIOR TO WORK START. CONTRACTOR TO NOTIFY OWNER'S REPRESENTATIVE OF ANY DISCREPANCIES PRIOR TO CONSTRUCTION.

32. NO EXTRA PAY WILL BE ALLOWED FOR WORK CALLED FOR ON THE PLANS BUT NOT INCLUDED ON THE BID SHEET. THIS INCIDENTAL WORK WILL BE REQUIRED AND SHALL BE INCLUDED UNDER THE PAY ITEM TO WHICH IT RELATES.

33. VEHICLE BARRIERS FOR PASSENGER VEHICLES SHALL BE DESIGNED TO RESIST A CONCENTRATED LOAD OF 6,000 LBS

34. CONTRACTOR SHALL BE RESPONSIBLE FOR DAMAGES TO EXISTING WATER, WASTEWATER, STORM WATER LINES AND TRAFFIC CONTROL DEVICES. DAMAGES SHALL BE REPAIRED IN ACCORDANCE WITH THE HOUSTON PUBLIC WORKS, STANDARD CONSTRUCTION SPECIFICATIONS FOR WASTEWATER COLLECTION SYSTEM, WATER LINES, STORM DRAINAGE, AND STREET PAVING AND STANDARD CONSTRUCTION DETAILS FOR WASTEWATER COLLECTION SYSTEMS, WATER LINES, STORM DRAINAGE, AND STREET PAVING, REFERENCED ABOVE, AT NO ADDITIONAL COST.

35. CONTRACTOR SHALL NOTIFY THE OFFICE OF THE CITY ENGINEER, HOUSTON PUBLIC WORKS @ 832–394–9098 OR VIA FAX AT 832–395–4424 FOR INSPECTION AT LEAST 48 HOURS PRIOR TO COMMENCING CONSTRUCTION.

36. ADEQUATE DRAINAGE SHALL BE MAINTAINED AT ALL TIMES DURING CONSTRUCTION AND ANY DRAINAGE DITCH OR STRUCTURE DISTURBED DURING CONSTRUCTION SHALL BE RESTORED TO EXISTING CONDITIONS OR BETTER.

37. CONTRACTOR SHALL TAKE NECESSARY PRECAUTIONS TO PROTECT ROOT SYSTEMS OF SHRUBS, PLANTS AND TREES ALONG THE AREA OF EXCAVATION.

38. CONTRACTOR SHALL MAINTAIN A SET OF REDLINE DRAWINGS AND RECORD AS–BUILT CONDITIONS DURING CONSTRUCTION. THESE REDLINE MARKED UP DRAWINGS WILL BE SUBMITTED TO THE DESIGN CONSULTANT WHO WILL MAKE THE CHANGES ON THE ORIGINAL TRACINGS, LABEL EACH SHEET IN THE SET AS "RECORD DRAWINGS", AND RETURN IT TO THE OFFICE OF THE CITY ENGINEER.

SANITARY SEWER CONSTRUCTION NOTES

1. ALL SEWERS SHALL BE CONSTRUCTED IN ACCORDANCE WITH THE CITY OF HOUSTON ?STANDARD CONSTRUCTION SPECIFICATIONS FOR WASTEWATER COLLECTION SYSTEMS, WATER LINES, STORM DRAINAGE, STREET PAVING, AND TRAFFIC? AND ALL CURRENT AMENDMENTS THERETO AND BE SUBJECT TO A STANDARD EXFILTRATION TEST. TESTS ARE TO BE PERFORMED ON THE TOTAL FOOTAGE OF SEWER LINE INCLUDED IN THE PROJECT. REQUIREMENTS OF TEXAS ADMINISTRATIVE CODE, TITLE 30 CHAPTER 217, ?DESIGN CRITERIA DOMESTIC WASTEWATER SYSTEMS? SHALL GOVERN WHERE CONFLICTS EXIST EXCEPT WHERE CITY REQUIREMENTS ARE MORE STRINGENT.

2. ALL MANHOLES ARE TO BE PER CITY OF HOUSTON STANDARD DETAILS DRAWING NUMBERS 02082–01, 02082–02, 02082N–02, 02082–03, AND 02082N–03 UNLESS OTHERWISE NOTED. USE 2010 VERSION AS APPLICABLE.

3. SANITARY SEWER MANHOLES WILL HAVE BEDDING AND BACKFILL PER CITY OF HOUSTON STANDARD DETAILS DRAWING NO. 02317–08 UNLESS OTHERWISE NOTED.

4. ALL SANITARY SEWER LINES UNDER PROPOSED OR FUTURE PAVEMENT AND TO A POINT ONE (1) FOOT BACK OF ALL PROPOSED OR FUTURE CURBS SHALL HAVE BEDDING PER CITY OF HOUSTON STANDARD DETAILS DRAWING NUMBERS 02317–01, 02317–02, OR 02317–03 AS APPLICABLE, WITH 1 ½ SACK CEMENT/CY STABILIZED SAND BACKFILL UP TO THE BOTTOM OF THE PAVEMENT SUBGRADE. 100 PSI PERFORMANCE RESULTS ARE STILL REQUIRED.

5. CONTRACTOR SHALL PROVIDE A MINIMUM HORIZONTAL CLEARANCE OF 9' FEET BETWEEN WATER LINES AND SANITARY SEWER MANHOLES AND LINES.

6. SANITARY SEWER MANHOLE RIMS OUTSIDE OF PROPOSED PAVING WILL BE SET 3? – 6? ABOVE THE SURROUNDING LEVEL FINISHED GRADE AFTER PAVING WITH SLOPED BACKFILL ADDED FOR STORM WATER TO DRAIN AWAY FROM MANHOLE RIM.

7. ALL NEW AND EXISTING MANHOLES SHALL BE CORED WHEN MAKING CONNECTIONS THAT WERE NOT MADE BY THE MANUFACTURER CONTRACTOR SHALL USE RESILIENT CONNECTOR MEETING THE REQUIREMENTS OF ASTM C–923 FOR PIPE CONNECTOR.

GRADING NOTES

1. GENERAL CONTRACTOR AND ALL SUBCONTRACTORS SHALL VERIFY THE SUITABILITY OF ALL EXISTING AND PROPOSED SITE CONDITIONS INCLUDING GRADES AND DIMENSIONS BEFORE STARTING CONSTRUCTION. THE ENGINEER SHALL BE NOTIFIED IMMEDIATELY OF ANY DISCREPANCIES.

2. BEFORE STARTING CONSTRUCTION, CONTRACTOR SHALL VERIFY BENCHMARK ELEVATION AND NOTIFY ENGINEER IF ANY DISCREPANCY AND/OR CONFLICT IS FOUND.

3. CONTRACTOR SHALL ENSURE THERE IS POSITIVE DRAINAGE FROM THE PROPOSED BUILDINGS AND NO PONDING IN PAVED AREAS, AND SHALL NOTIFY ENGINEER IF ANY GRADING DISCREPANCIES ARE FOUND IN THE EXISTING AND PROPOSED GRADES PRIOR TO PLACEMENT OF PAVEMENT OR UTILITIES.

4. CONTRACTOR SHALL PROTECT ALL MANHOLE COVERS, VALVE COVERS, VAULT LIDS, FIRE HYDRANTS, POWER POLES, GUY WIRES, AND TELEPHONE BOXES THAT ARE TO REMAIN IN PLACE AND UNDISTURBED DURING CONSTRUCTION.

5. ALL EXISTING CONCRETE PAVING, SIDEWALK, AND CURB DEMOLITION SHALL BE REMOVED AND DISPOSED OF BY CONTRACTOR. DISPOSAL SHALL BE AT AN APPROVED OFF–SITE, LAWFUL LOCATION, UNLESS DIRECTED OTHERWISE BY THE OWNER.

NO.	DATE	REVISION	APP.

HATCH
750 TOWN & COUNTRY BLVD
SUITE 650
HOUSTON, TX 77024
P: 832–930–7670
TX FIRM NUMBER: F–314

SURVEYED BY:
AMANI ENGINEERING, INC.
FB NO. P–6357

STATE OF TEXAS
MARK G. SCALLY
136279
LICENSED PROFESSIONAL ENGINEER
5/1/26

CITY OF HOUSTON
HOUSTON PUBLIC WORKS

LIFT STATION RENEWAL & REPLACEMENT PROJECT

GENERAL CONSTRUCTION NOTES

WBS NUMBER
R–000267–0173–4
DRAWING SCALE
N.T.S.
CITY OF HOUSTON PM
N.K. NUPUR KRISHNAN, P.E.
ZOC150 SHEET NO. 273 OF 274

FOR CITY OF HOUSTON USE ONLY

HOUSTON PUBLIC WORKS
ACCEPTED AND FILED
82825
CITY DRAWING NUMBER
Approval Date 08/14/26
HOUSTON TX

PLOTTED: 8/12/2026 5:49 AM
PLOT STYLE: COH.ctb
FILE PATH: \\wusppplot01\d$\Global ProjectWise Plotting – WUS\Queue 2\queue2.dwg

SHEET NOT USED

NO.	DATE	REVISION	APP.

HATCH
750 TOWN & COUNTRY BLVD
SUITE 650
HOUSTON, TX 77024
P: 832-930-7670
TX FIRM NUMBER: F-314

SURVEYED BY:
AMANI ENGINEERING, INC.
FB NO. P-6357

STATE OF TEXAS
MARK G. SCALLY
136279
LICENSED
PROFESSIONAL ENGINEER
5/19/26

CITY OF HOUSTON
HOUSTON PUBLIC WORKS

LIFT STATION RENEWAL & REPLACEMENT PROJECT

WBS NUMBER
R-000267-0173-4
DRAWING SCALE
AS NOTED
CITY OF HOUSTON PM
NUPUR KRISHNAN P.E. N.K.
SHEET NO. 274 OF 274

FOR CITY OF HOUSTON USE ONLY

HOUSTON
PUBLIC WORKS
ACCEPTED AND FILED
82825
CITY DRAWING NUMBER
Approval Date 08/14/26
HOUSTON TX

Z0E133

PLOT STYLE: COH.ctb
PLOTTED: 5/20/2026 9:41 AM
FILE PATH: \\wusppplot01\d$\Global ProjectWise Plotting - WUS\Queue 5\queue5.dwg